THIS DRAWING IS UNPUBLISHED. RELEASED FOR PUBLICATION -,- .
© COPYRIGHT - By - ALL RIGHTS RESERVED.

LOC	DIST
A1	—

REVISIONS

P	LTR	DESCRIPTION	DATE	DWN	APVD
	Y	PLATING CHANGE TO PdNi + Au FLASH IN NOTE 1	26MAY2014	KJK	JK

MODU II SHROUDED POSTS

MODU II Stiftleiste

SINGLE ROW 3 TO 50 POS.
Einreihig 3 bis 50 pol.

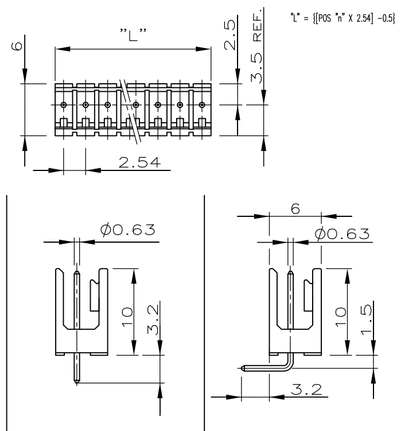

DOUBLE ROW 2x3 TO 2x50 POS.
Zweireihig 2x3 bis 2x50 pol.

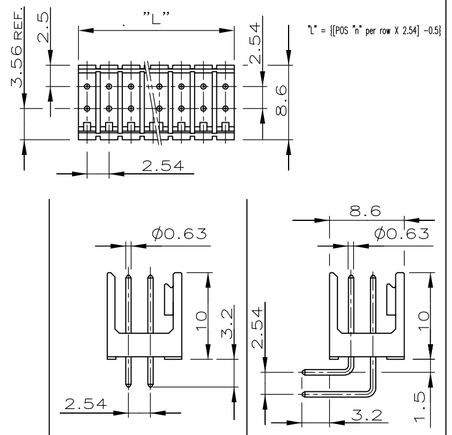

POS.	PART NUMBERS	PART NUMBERS	POS.	PART NUMBERS	PART NUMBERS
3 (2) TO 50	1 826 467-3 BIS ~~5-826 467-0~~ 3	1 826 468-3 BIS 5-826 468-0	2x3 TO 2x50	1 826 469-3 BIS 5-826 469-0	1 826 470-2 BIS 5-826 470-0
	2 ~~827 295-2 BIS~~ ~~5-827 295-0~~ 3 3	2 827 296-3 BIS ~~5-827 296-0~~ 3		2 827 297-3 BIS ~~5-827 297-0~~ 3	2 ~~827 298-3 BIS~~ 5-827 298-0 3 3

RETENTION PLUG
Rastgabel

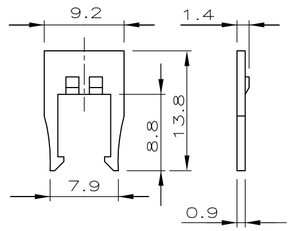

RETENTION PLUG WITH STRAIN RELIEF
Rastgabel mit Zugentlastung

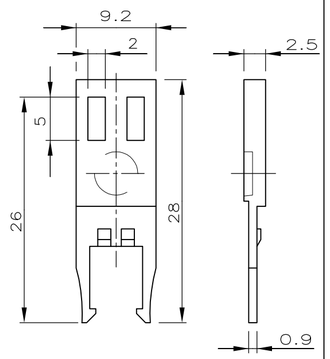

KEYING PLUG
Kodierstift

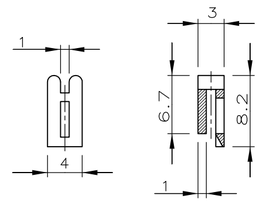

KEYING BLOCK
Kodierblock

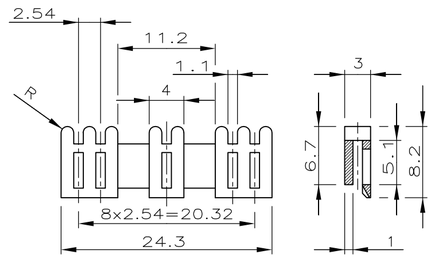

PART NUMBERS	COLOUR	PART NUMBERS	COLOUR	PART NUMBERS	COLOUR	PART NUMBERS	COLOUR
926 477-1	BLACK	926 478-1	BLACK	926 498-1	BLACK	~~927 607-1~~ 3	BLACK
926 477-2	GREEN	~~926 478-2~~ 3	GREEN	926 498-2	GREEN	~~927 607-2~~ 3	GREEN
926 477-3	RED	926 478-3	RED	926 498-3	RED	~~927 607-3~~ 3	RED

MODU IV RECEPTACLE HOUSING
MODU IV Buchsengehäuse

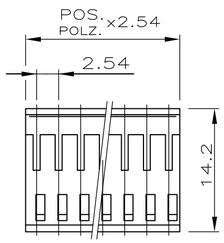

SINGLE ROW
2 TO 36 POS.
Einreihig
2 bis 36 polig.

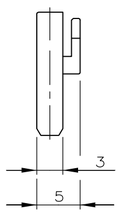

DOUBLE ROW
2x2 TO 2x36 POS.
Zweireihig
2x2 bis 2x36 polig

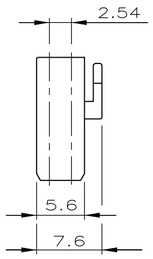

FFC HOUSING
FFC Gehäuse

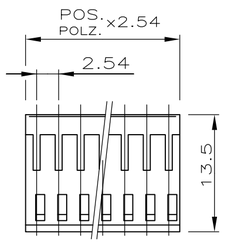

DOUBLE ROW
2x3 TO 2x13 POS.
Zweireihig
2x3 bis 2x13 polig

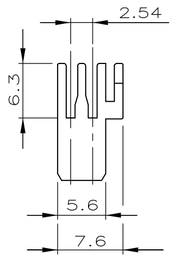

POS.	PART NUMBERS	POS.	PART NUMBERS	POS.	PART NUMBERS
2 TO 36	926 475-2	2x2 TO 2x36	926 476-2	2x3 TO 2x13	~~927 009-3~~ 4
	3-926 475-6		3-926 476-6		1-927 009-3 3

ASSEMBLED COMPONENTS (FOR EXAMPLE)
Anwendungsbeispiel

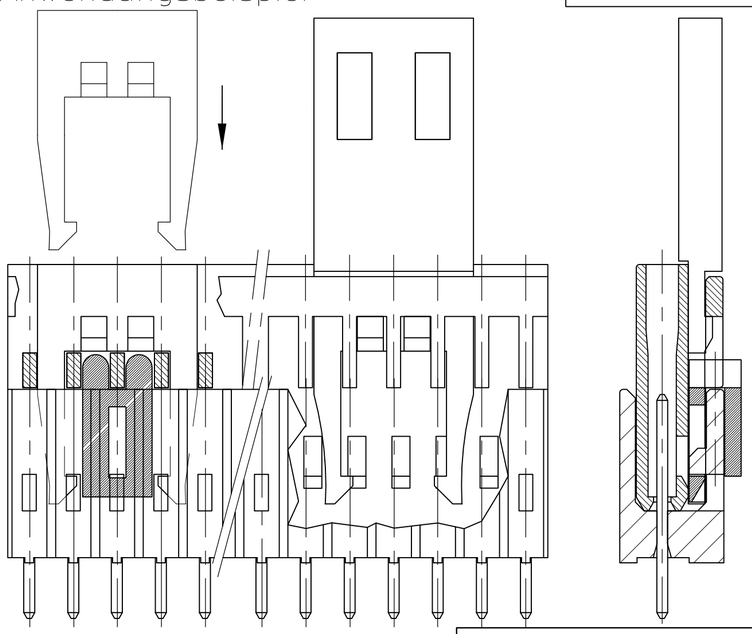

1 CONTACT PIN/Kontaktstift: CuZn
PLATING MATING AREA:
MIN. 0.7µm PdNi + 0.1µm GOLD FLASH OVER 1.27µm Ni
SOLDER SIDE: MIN 3.0µm Sn OVER 1.27µm Ni

2 CONTACT PIN/Kontaktstift: CuSn
PRE TIN PLATED MIN. 2.0µm Sn OVER 1.27µm Ni (PIN TIPS BLANK)
Vorverzinnt min. 2.0µm Sn über 1.27µm Ni (Stiftspitzen blank)

MATERIAL:

PIN HEADER Stiftgehäuse	PCT-GV	BLACK/schwarz
RECEPTACLE HOUSING Buchsengehäuse	PBT-GV	BLACK/schwarz
RETENTION PLUGS Rastgabeln	PC-GV	
KEYING PLUG AND BLOCK Kodierstift, -block	PA 6.6 GV	
FFC HOUSING FFC Gehäuse	PBT-GV	BLACK/schwarz

3 OBSOLETE PARTS

4 OBSOLETE PARTS:OBSOLETE CIS STREAMLINING PER D.RENAUD/D.SINISI

826467

THIS DRAWING IS A CONTROLLED DOCUMENT.

DIMENSIONS: mm

TOLERANCES UNLESS OTHERWISE SPECIFIED: ±0.2mm
0 PLC ± -
1 PLC ± -
2 PLC ± -
3 PLC ± -
4 PLC ± -
ANGLES ± -

MATERIAL -
FINISH -

DWN A.HO 08.03.85
CHK M.SCHAARSCHMIDT 02.05.85
APVD -
PRODUCT SPEC -
APPLICATION SPEC -
WEIGHT -

TE Connectivity

NAME AMPMODU II / AMPMODU IV

SIZE	CAGE CODE	DRAWING NO	RESTRICTED TO
A2	00779	C-826467	-

CUSTOMER DRAWING | SCALE 2:1 | SHEET 1 OF 2 | REV Y

THIS DRAWING IS UNPUBLISHED. RELEASED FOR PUBLICATION -,- .
© COPYRIGHT - By - ALL RIGHTS RESERVED.

LOC	DIST
A1	—

REVISIONS

P	LTR	DESCRIPTION	DATE	DWN	APVD
	-	SEE SHEET 1	-	—	—

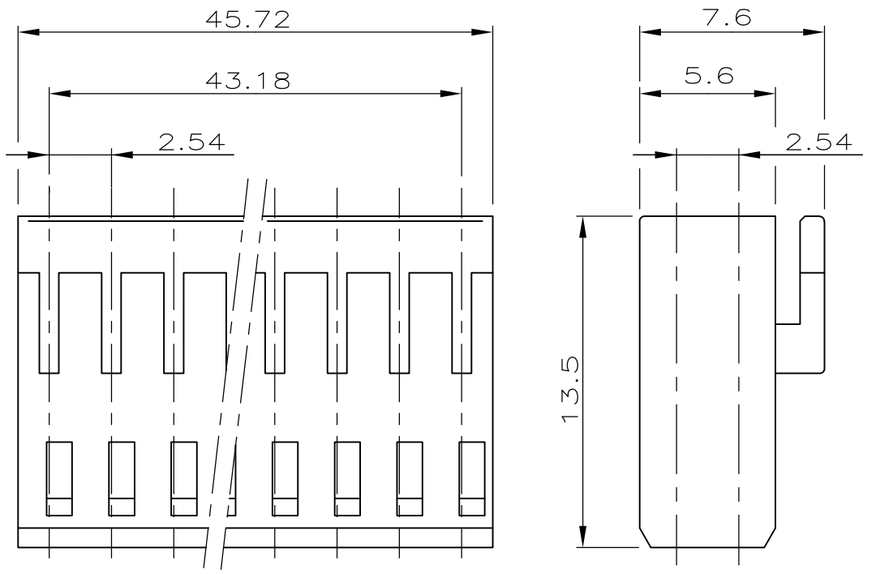

PN 6-926476-8

2x18 POS. AMPMODU IV RECEPTACLE HOUSING

2x18 POL. AMPMODU IV BUCHSENGEHÄUSE

PACKAGING
Verpackung

PART NUMBER 5-826467-3 INCLUDING 75 PCS. OF PN 826467-3
PACKED IN PLASTIC BOX (78mm x 78mm x 45mm)
FOR TE-HARRISBURG ONLY

Bestell- Nummer 5-826467-3 enthällt 75 Stk. PN 826467-3
verpackt in Kunststoffschachtel (78mm x 78mm x 45mm)
nur für TE-Harrisburg

THIS DRAWING IS A CONTROLLED DOCUMENT.

DIMENSIONS: mm

TOLERANCES UNLESS OTHERWISE SPECIFIED: ±0.2mm
0 PLC ± -
1 PLC ± -
2 PLC ± -
3 PLC ± -
4 PLC ± -
ANGLES ± -

MATERIAL -

FINISH -

DWN M.SCHAARSCHMIDT 27.09.85
CHK W.MORITZ 30.09.85
APVD —
PRODUCT SPEC —
APPLICATION SPEC —
WEIGHT —

TE Connectivity

NAME AMPMODU II/AMPMODU IV

SIZE	CAGE CODE	DRAWING NO	RESTRICTED TO
A3	00779	C-826467	—

CUSTOMER DRAWING

SCALE	SHEET	REV
4:1	2 OF 2	Y