THIS DRAWING IS UNPUBLISHED. RELEASED FOR PUBLICATION -,- .
© COPYRIGHT - By - ALL RIGHTS RESERVED.

LOC	DIST
—	—

REVISIONS

P	LTR	DESCRIPTION	DATE	DWN	APVD
	E	Hsg mat change to readily available PBT resin	06JAN2014	PS	JK

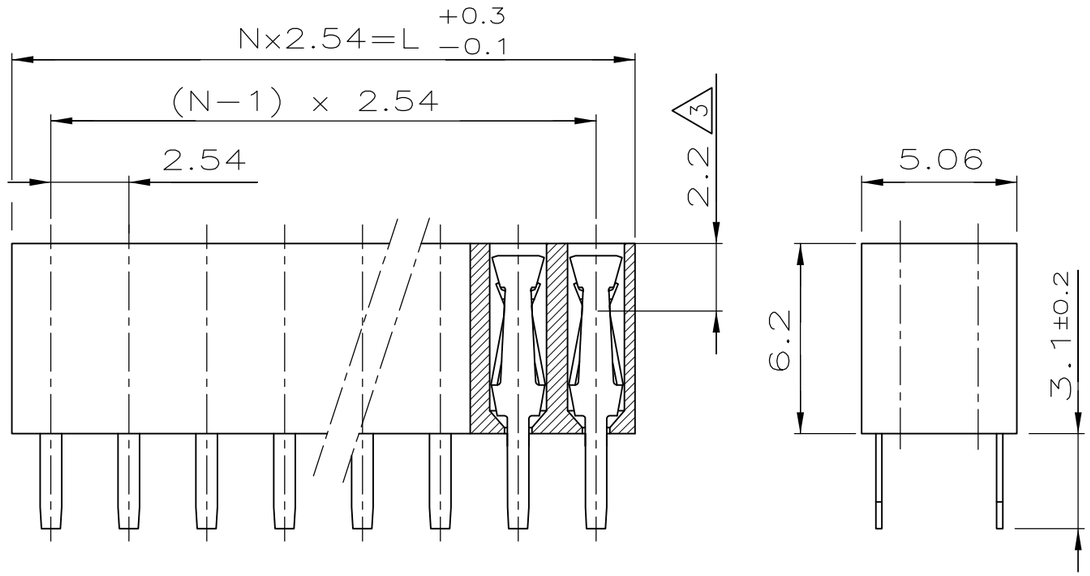

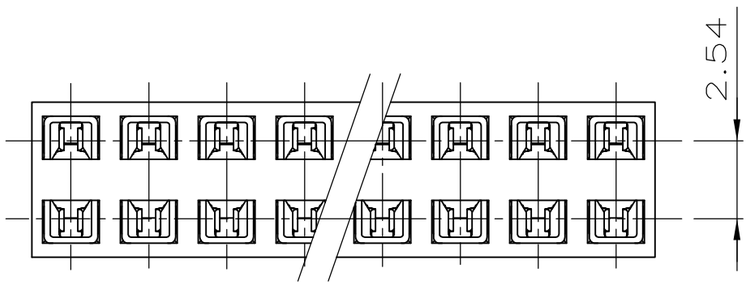

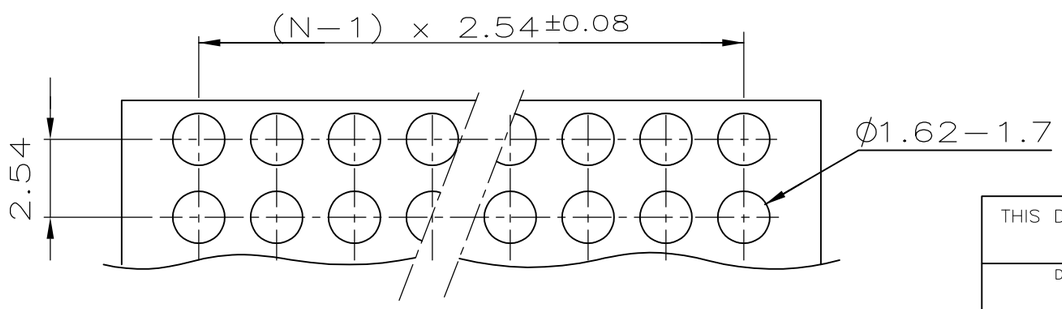

P.C.−BOARD HOLE−PATTERN

NOTES:

1. PLATING: UNDERCOATING: 1,3µm Ni.
AT CONT.PLACE: 0,8µm Au.
AT SOLDER−TYNES: 3.0 − 5.0µm Sn.

2. MATES WITH 0,63 SQUARE/ROUND MODU POSTS.

3. CONTACT−POINT.

4. RECOMMENDED P.C.BOARD−THICKNESS: 1.6mm.

5. HV100 CONNECTOR PACKED IN ANTI−STATIC BLISTER TRAY.

6. OBSOLETE PARTS: OBSOLETE CIS STREAMLINING PER D.RENAUD/D.SINISI

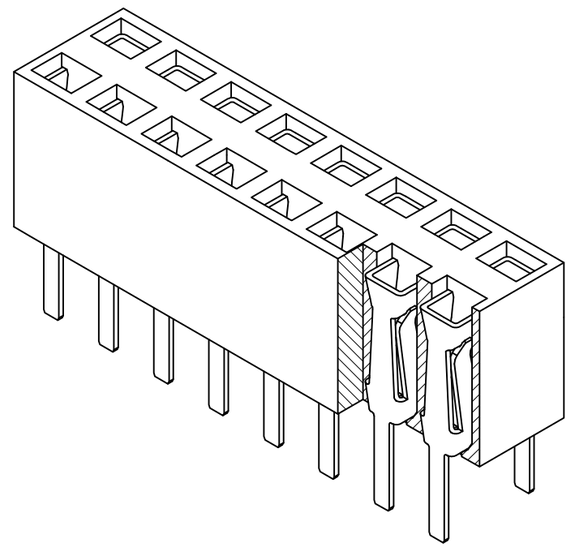

	POS. PER ROW 'N'	L	PART−NO.
	−	−	−
	2	5.08	215 315 −2
	3	7.62	−3
	4	10.16	−4
	5	12.70	−5
OBSOLETE	6	15.24	~~−6~~
	7	17.78	−7
OBSOLETE	8	20.32	~~−8~~
OBSOLETE	9	22.86	~~−9~~
OBSOLETE	10	25.40	~~1 −0~~
	11	27.94	1− −1
OBSOLETE	12	30.48	~~1 −2~~
	13	33.02	1− −3
OBSOLETE	14	35.56	~~1 −4~~
	15	38.10	1− −5
	16	40.64	1− −6
OBSOLETE	17	43.18	~~1 −7~~
OBSOLETE	18	45.72	~~1 −8~~
	19	48.26	1− −9
OBSOLETE	20	50.80	~~2 −0~~
	21	53.34	2− −1
	22	55.88	2− −2
	23	58.42	2− −3
	24	60.96	2− −4
	25	63.50	2− −5
	26	66.04	2− −6
	27	68.58	2− −7
	28	71.12	2− −8
	29	73.66	2− −9
	30	76.20	3− −0
6 OBSOLETE	31	78.74	~~3− −1~~
OBSOLETE	32	81.28	~~3− −2~~
	33	83.82	3− −3
	34	86.36	3− −4
	35	88.90	3− −5
OBSOLETE	36	91.44	~~3− 215 315 −6~~

FINISH	MATERIAL	DESCRIPTION
1	CuSn	REC. CONTACT
GREEN	PBT	REC. HOUSING

THIS DRAWING IS A CONTROLLED DOCUMENT.

DIMENSIONS: mm

TOLERANCES UNLESS OTHERWISE SPECIFIED:
±0.15
0 PLC ± −
1 PLC ± −
2 PLC ± −
3 PLC ± −
4 PLC ± −
ANGLES ± −

MATERIAL: SEE TABLE
FINISH: SEE TABLE

DWN L.V.D.HEYDEN 20.05.86
CHK −
APVD −
PRODUCT SPEC 108−19056
APPLICATION SPEC −
WEIGHT −

CUSTOMER DRAWING

TE Connectivity

NAME
HV 100 VERTICAL CONNECTOR
DUAL ROW, 6,2mm HEIGHT,
BOTTOM/TOP ENTRY, GOLD, MAX. 2x36 POSITIONS.

SIZE	CAGE CODE	DRAWING NO	RESTRICTED TO
A3	00779	C−215315	−

SCALE	SHEET	REV
5:1	1 OF 1	E