THIS DRAWING IS UNPUBLISHED. RELEASED FOR PUBLICATION -,- .
© COPYRIGHT - By - ALL RIGHTS RESERVED.

LOC	DIST
DF	FO

REVISIONS

P	LTR	DESCRIPTION	DATE	DWN	APVD
	G1	REVISED PER ECO-11-005030	23MAR11	RK	HMR

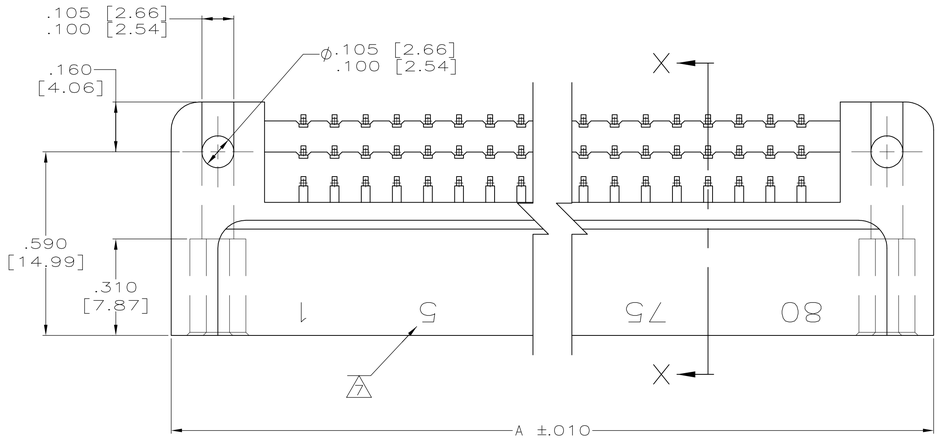

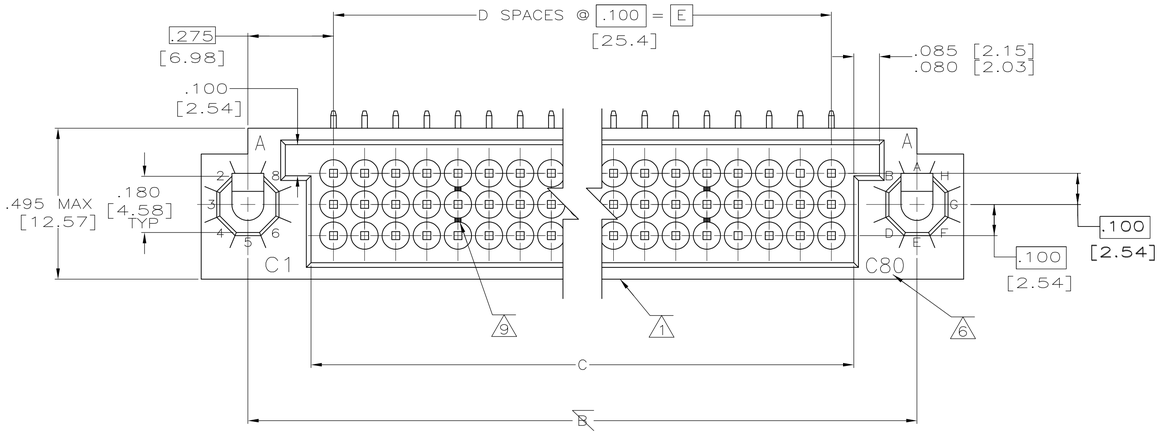

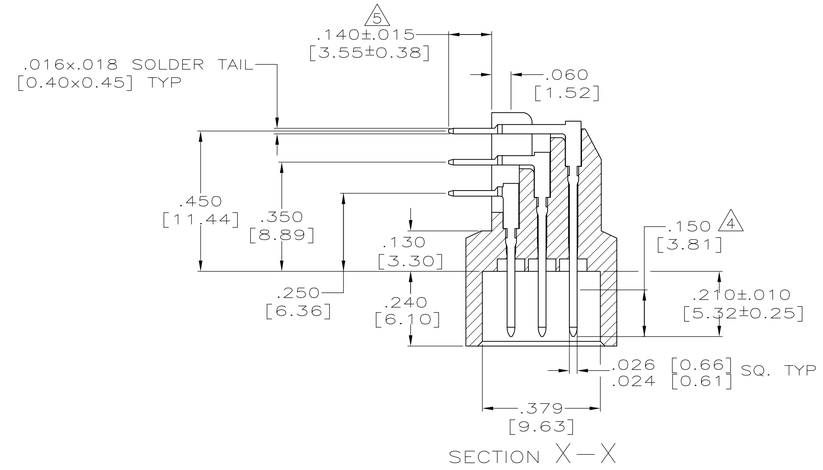

SECTION X–X

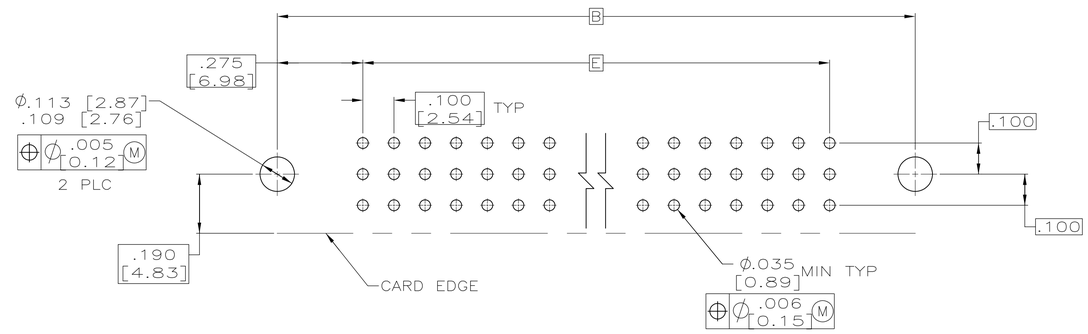

RECOMMENDED P.C. BOARD LAYOUT

	M55302/129–16	6.400 [162.56]	64	6.544 [166.21]	6.950 [176.53]	7.250 [184.15]	195	1–531133–3
	M55302/129–12	4.400 [111.76]	44	4.544 [115.41]	4.950 [125.73]	5.250 [133.35]	135	1–531133–2
OBSOLETE	–	3.600 [91.44]	36	3.744 [95.10]	4.150 [105.41]	4.450 [113.03]	111	1–531133–1
	–	4.100 [104.14]	41	4.244 [107.80]	4.650 [118.11]	4.950 [125.73]	126	1–531133–0
	M55302/129–18	7.900 [200.66]	79	8.044 [204.31]	8.450 [214.63]	8.750 [222.25]	240	531133–8
	M55302/129–17	6.900 [175.26]	69	7.044 [178.91]	7.450 [189.23]	7.750 [196.85]	210	531133–7
	M55302/129–15	5.900 [149.86]	59	6.044 [153.51]	6.450 [163.83]	6.750 [171.45]	180	531133–6
	M55302/129–14	5.400 [137.16]	54	5.544 [140.81]	5.950 [151.13]	6.250 [158.75]	165	531133–5
	M55302/129–13	4.900 [124.46]	49	5.044 [128.11]	5.450 [138.43]	5.750 [146.05]	150	531133–4
	M55302/129–11	3.900 [99.06]	39	4.044 [102.71]	4.450 [113.03]	4.750 [120.65]	120	531133–3
	M55302/129–10	3.400 [86.36]	34	3.544 [90.01]	3.950 [100.33]	4.250 [107.95]	105	531133–2
	M55302/129–09	2.900 [73.66]	29	3.044 [77.31]	3.450 [87.63]	3.750 [95.25]	90	531133–1
	MILITARY P/N	E	D	C	B	A	POSN.	PART NO.

1. MILITARY PART NO., 00779, DATE CODE, PART NO. AND AMP MARKED THIS SIDE.
2. HOUSING MAT'L: POLYPHENYLENE SULFIDE, GST-40F PER MIL-M-24519. COLOR: BROWN
3. CONTACT MAT'L: BRASS PER QQ-B-626.
4. CONTACT FINISH: .000050" [0.00127] GOLD OVER .000050" [0.00127] NICKEL IN CONTACT AREA.
5. CONTACT FINISH: .000100" [0.00254] TIN-LEAD OVER .000050" [0.00127] NICKEL
6. LETTERS INDICATING OUTSIDE ROWS AND NUMBERS INDICATING END CAVITIES (ROW C ONLY) MARKED THIS SURFACE.
7. NUMBERS INDICATING EVERY FIVE CAVITIES MARKED, BOTH SIDES.
8. MEETS ALL REQUIREMENTS OF MIL-C-55302.
9. LINES INDICATING EVERY FIVE CAVITIES STAMPED ON MATING FACE, EXCEPT END CAVITIES, STARTING AT POSN. #1.

THIS DRAWING IS A CONTROLLED DOCUMENT.

DIMENSIONS: INCHES[mm]

TOLERANCES UNLESS OTHERWISE SPECIFIED:
0 PLC ± –
1 PLC ± –
2 PLC ± –
3 PLC ± .005 [0.13]
4 PLC ± –
ANGLES ± –

MATERIAL 2 - 3
FINISH 4 - 5

DWN T. ALEXANDER 8-5-92
CHK D. MILLER 11-10-92
APVD W. FOLEY 11-10-92
PRODUCT SPEC —
APPLICATION SPEC —
WEIGHT —

TE Connectivity

NAME PIN HEADER ASS'Y, RIGHT ANGLE, .100 C/L, WITH MOUNTING EARS

SIZE	CAGE CODE	DRAWING NO	RESTRICTED TO
A1	00779	C-531133	—

CUSTOMER DRAWING SCALE 4:1 SHEET 1 OF 1 REV G1

4805 (3/11)