PART NAME	SERIES 2000 UPRIGHT CABINET RACK	PART No.	E-2000 TO E-2015	REV. DATE	1-2-02

FINISH:
FRAME ASSEMBLY, SIDES, DOOR & TOP COVER ____ GRAY TEXTURE OR ROYAL BLUE TEXTURE
PANEL MOUNTING RAILS ____ SMOOTH BLACK
FRONT TOP TRIM ____ METALLIC GRAY

MATERIAL:
PANEL MOUNTING RAILS ____ 12 GA. STEEL
FRAME TOP, BASE ASSEMBLY, FILLERS & VERTICAL RAILS ____ 14 GA. STEEL
RAIL SUPPORTS ____ 16 GA. STEEL
TOP COVER & SIDES ____ 18 GA. STEEL
DOOR & FRONT TOP TRIM ____ 20 GA. STEEL

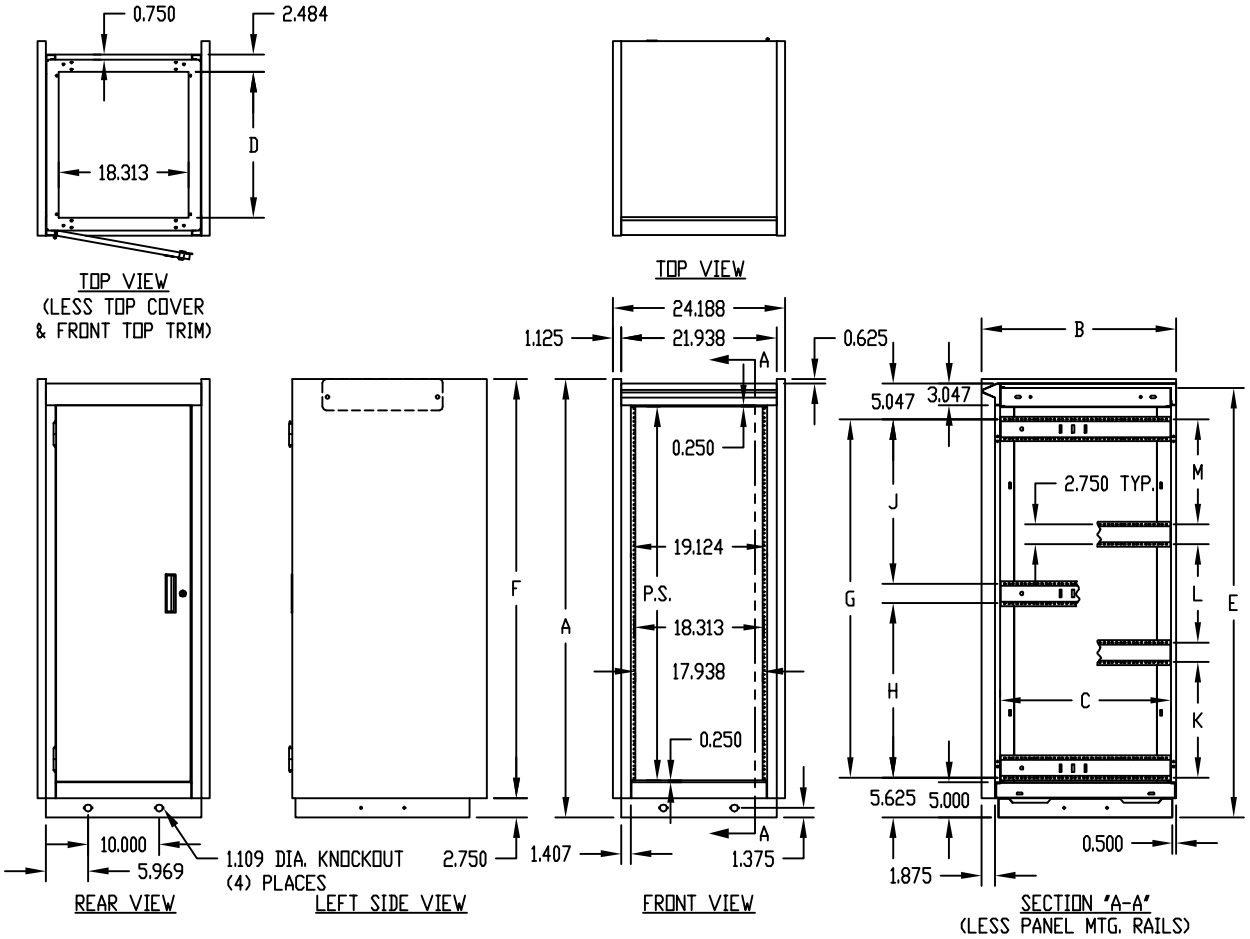

PANEL MOUNTING RAILS (FRONT & REAR) ARE TAPPED #10-32 ON E.I.A. UNIVERSAL SPACING AND ARE FULLY ADJUSTABLE.

BOTTOM PIERCED FOR MOUNTING RC-7758 CASTERS.

LOAD RATING: 1200 LBS. MAX.

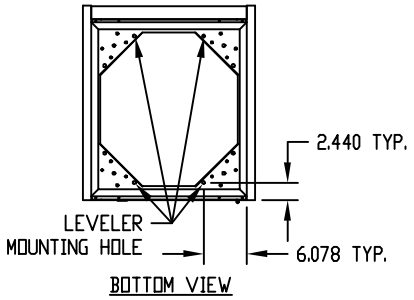

* DISCONTINUED

PART No.	P.S.	A	B	C	D	E	F	G	H	J	K	L	M
E-2000	21.000	30.250	23.875	20.500	17.000	29.000	27.500	18.937	—	—	—	—	—
* E-2001	31.500	40.750				39.500	38.000	29.437	—	—	—	—	—
* E-2002	35.000	44.250				43.000	41.500	32.937	—	—	—	—	—
E-2003	42.000	51.250				50.000	48.500	—	19.281	17.906	—	—	—
E-2004	52.500	61.750				60.500	59.000	—	24.531	23.156	—	—	—
E-2005	61.250	70.500				69.250	67.750	—	28.906	27.531	—	—	—
E-2006	70.000	79.250				78.000	76.500	—	33.281	31.906	—	—	—
E-2007	78.750	88.000	23.875	20.500	17.000	86.750	85.250	—	—	—	25.125	22.312	23.750
E-2008	21.000	30.250	27.375	24.000	20.500	29.000	27.500	18.937	—	—	—	—	—
* E-2009	31.500	40.750				39.500	38.000	29.437	—	—	—	—	—
* E-2010	35.000	44.250				43.000	41.500	32.937	—	—	—	—	—
E-2011	42.000	51.250				50.000	48.500	—	19.281	17.906	—	—	—
E-2012	52.500	61.750				60.500	59.000	—	24.531	23.156	—	—	—
E-2013	61.250	70.500				69.250	67.750	—	28.906	27.531	—	—	—
E-2014	70.000	79.250				78.000	76.500	—	33.281	31.906	—	—	—
E-2015	78.750	88.000	27.375	24.000	20.500	86.750	85.250	—	—	—	25.125	22.312	23.750