Feb.1.2018 Copyright 2018 HIROSE ELECTRIC CO., LTD. All Rights Reserved.

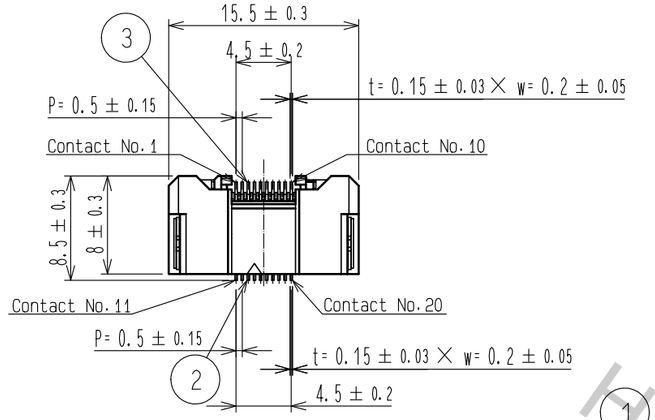

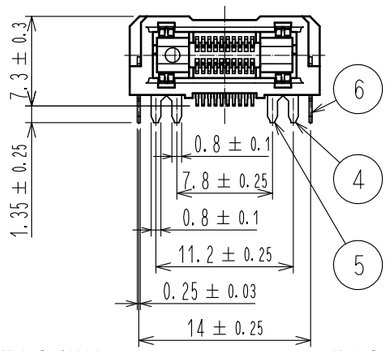

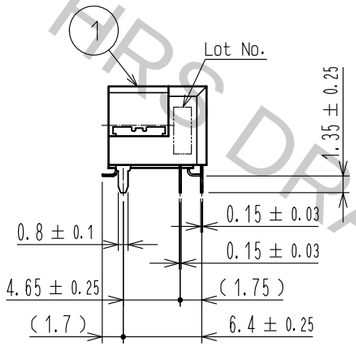

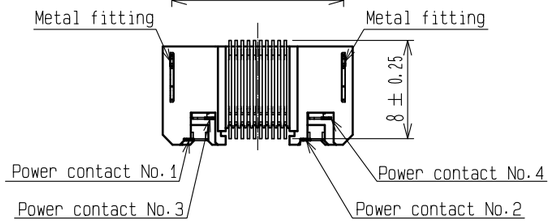

RECOMMENDED LAND PATTERN DIMENSION OF PCB
(PCB THICKNESS:t=1.6mm)

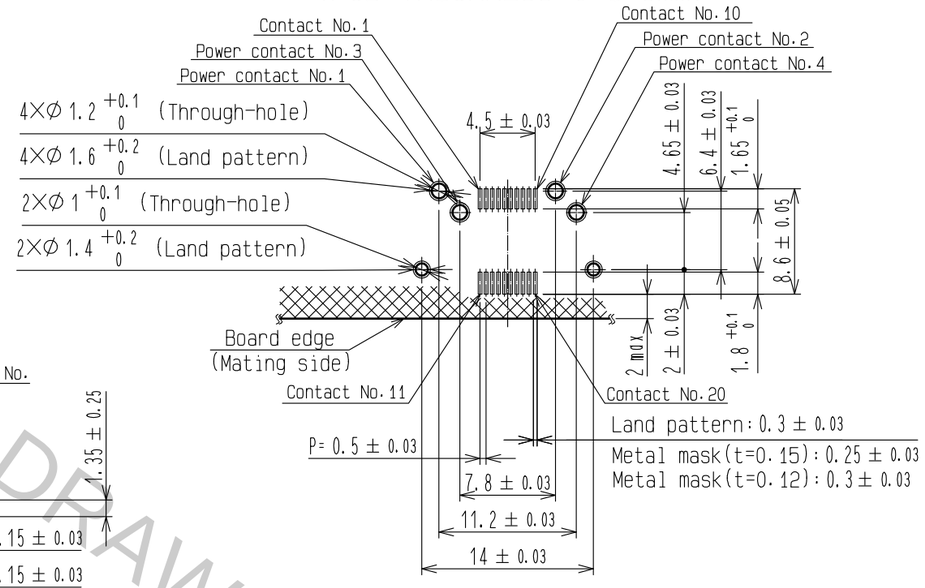

3 FLOATING RANGE

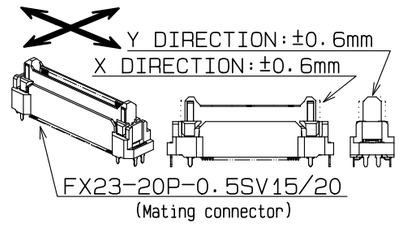

CROSS SECTION OF MATING
(No scale)

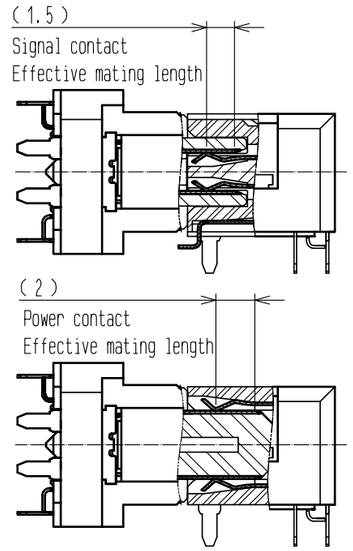

PCB DISTANCE(No scale)

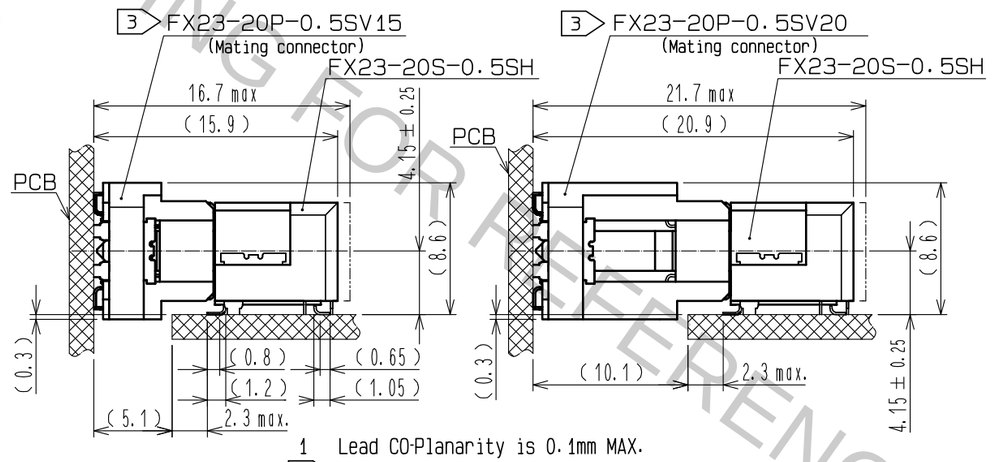

2 DRAWING FOR PACKING(No scale)

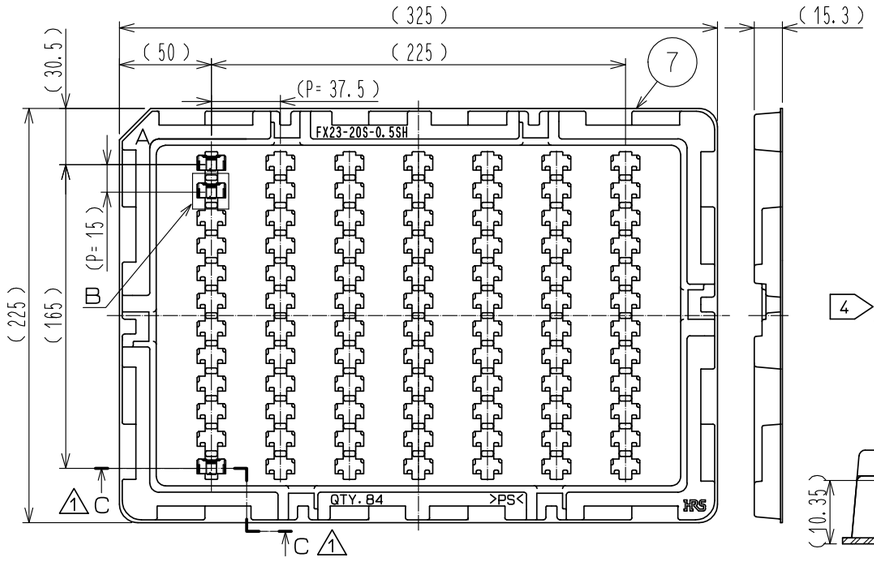

B(1:1)

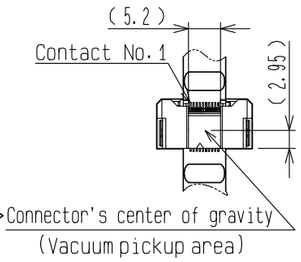

1 C-C(1:1)

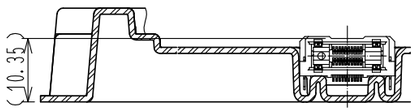

1 Lead CO-Planarity is 0.1mm MAX.
2 This is packaged in tray.(84pcs/tray)
3 Floating range of this connector is ±0.6mm MAX.
4 It shows the vacuum pickup area.
5 Blemish and hit mark can be occured through out the manufacturing process which doesn't affect quality level.
6 The dimensions in parentheses are for references.

NO.	MATERIAL	FINISH . REMARKS
2, 3	COPPER ALLOY	CONTACT AREA:GOLD 0.1μm LEAD AREA:GOLD 0.03μm UNDER PLATING:NICKEL 1.3μm
1	LCP	BLACK UL94V-0

NO.	MATERIAL	FINISH . REMARKS
7	POLYSTYRENE	(TRAY)
6	BRASS	LEAD AREA:TIN-PLATING 3μm UNDER PLATING:NICKEL 1μm
4, 5	COPPER ALLOY	CONTACT AREA:GOLD 0.1μm LEAD AREA:TIN-PLATING 1μm UNDER PLATING:NICKEL 1.3μm

UNITS	SCALE	COUNT	DESCRIPTION OF REVISIONS	DESIGNED	CHECKED	DATE
mm	2 : 1	3	DIS-F-00001541	TS.OONO	KN.SHIBUYA	16.08.23

HIROSE ELECTRIC CO., LTD.

APPROVED	HS.OKAWA	15.05.29
CHECKED	KN.SHIBUYA	15.05.28
DESIGNED	TS.OONO	15.05.28
DRAWN	TS.OONO	15.05.28

DRAWING NO. EDC-353565-00-00
PART NO. FX23-20S-0.5SH
CODE NO. CL573-3401-9-00
1/1

HRS DRAWING FOR REFERENCE