PRELIMINARY

CY7C1470V33
CY7C1472V33
CY7C1474V33

72-Mbit (2M x 36/4M x 18/1M x 72) Pipelined SRAM with NoBL™ Architecture

Features

- **Pin-compatible and functionally equivalent to ZBT™**
- **Supports 250-MHz bus operations with zero wait states**
  - **Available speed grades are 250, 200, and 167 MHz**
- **Internally self-timed output buffer control to eliminate the need to use asynchronous OE**
- **Fully registered (inputs and outputs) for pipelined operation**
- **Byte Write capability**
- **Single 3.3V power supply**
- **3.3V/2.5V I/O power supply**
- **Fast clock-to-output time**
  - **3.0 ns (for 250-MHz device)**
  - **3.0 ns (for 200-MHz device)**
  - **3.4 ns (for 167-MHz device)**
- **Clock Enable ($\overline{CEN}$) pin to suspend operation**
- **Synchronous self-timed writes**
- **CY7C1470V33 and CY7C1472V33 available in lead-free 100 TQFP, and 165-ball fBGA packages. CY7C1474V33 available in 209-ball fBGA package**
- **IEEE 1149.1 JTAG Boundary Scan compatible**
- **Burst capability—linear or interleaved burst order**
- **"ZZ" Sleep Mode option and Stop Clock option**

Functional Description

The CY7C1470V33, CY7C1472V33, and CY7C1474V33 are 3.3V, 2M x 36/4M x 18/1M x 72 Synchronous pipelined burst SRAMs with No Bus Latency™ (NoBL™) logic, respectively. They are designed to support unlimited true back-to-back Read/Write operations with no wait states. The CY7C1470V33, CY7C1472V33, and CY7C1474V33 are equipped with the advanced (NoBL) logic required to enable consecutive Read/Write operations with data being transferred on every clock cycle. This feature dramatically improves the throughput of data in systems that require frequent Write/Read transitions. The CY7C1470V33, CY7C1472V33, and CY7C1474V33 are pin compatible and functionally equivalent to ZBT devices.

All synchronous inputs pass through input registers controlled by the rising edge of the clock. All data outputs pass through output registers controlled by the rising edge of the clock. The clock input is qualified by the Clock Enable ($\overline{CEN}$) signal, which when deasserted suspends operation and extends the previous clock cycle.

Write operations are controlled by the Byte Write Selects ($\overline{BW_a}$–$\overline{BW_b}$ for CY7C1474V33, $\overline{BW_a}$–$\overline{BW_d}$ for CY7C1470V33 and $\overline{BW_a}$–$\overline{BW_b}$ for CY7C1472V33) and a Write Enable ($\overline{WE}$) input. All writes are conducted with on-chip synchronous self-timed write circuitry.

Three synchronous Chip Enables ($\overline{CE_1}$, CE_2, $\overline{CE_3}$) and an asynchronous Output Enable ($\overline{OE}$) provide for easy bank selection and output tri-state control. In order to avoid bus contention, the output drivers are synchronously tri-stated during the data portion of a write sequence.

Logic Block Diagram-CY7C1470V33 (2M x 36)

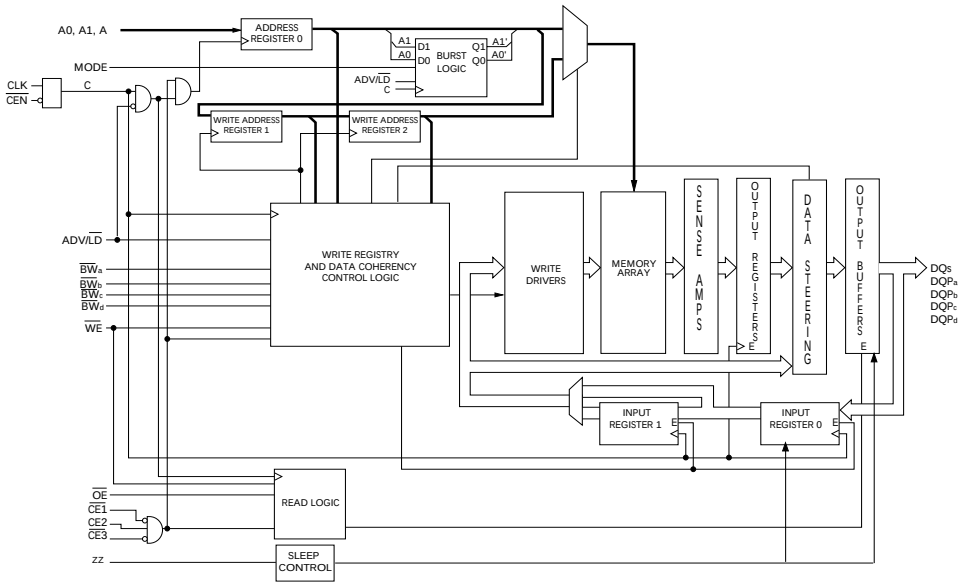

Logic Block Diagram-CY7C1474V33 (1M x 72)

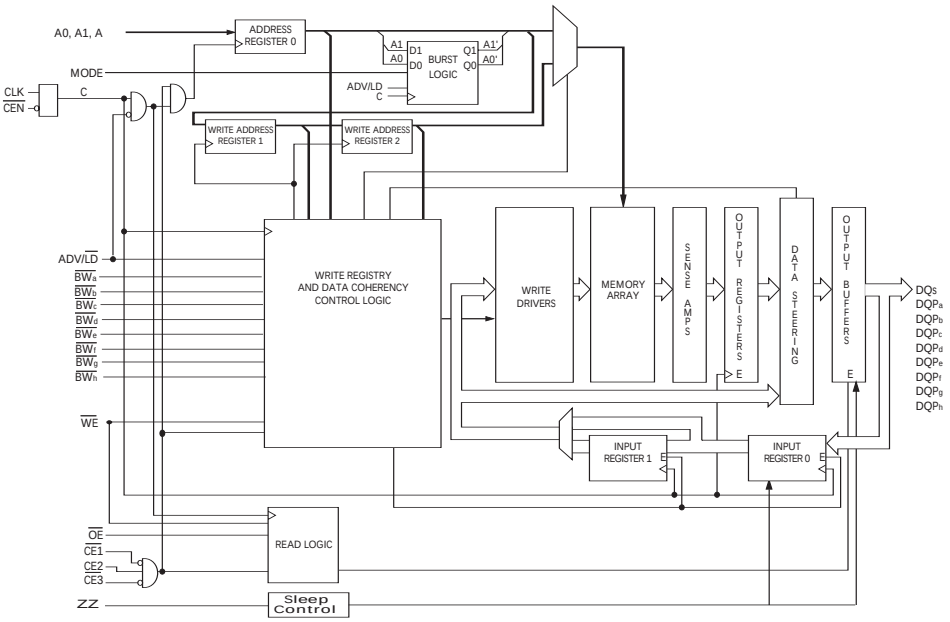

Logic Block Diagram-CY7C1472V33 (4M x 18)

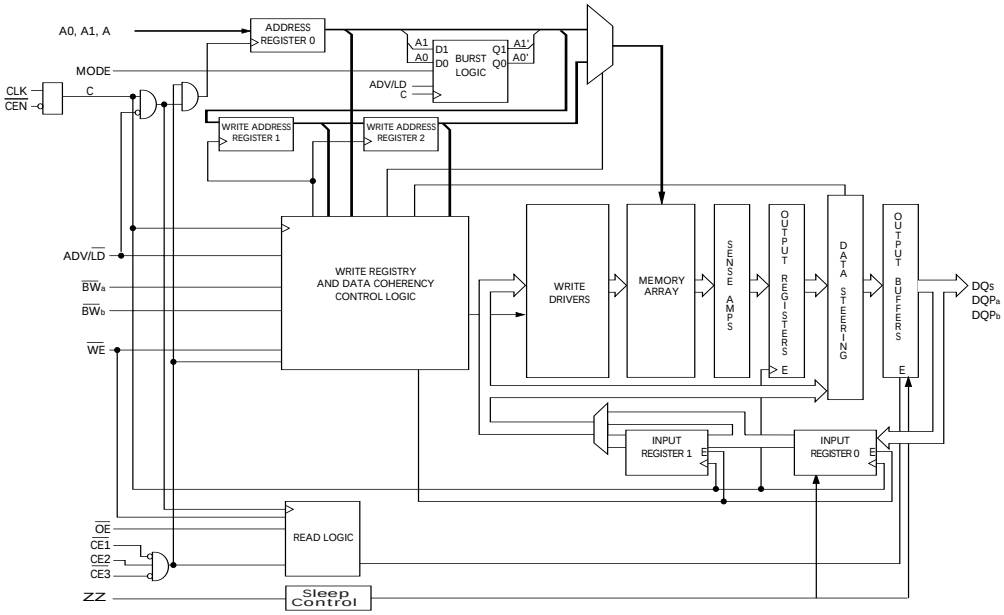

Selection Guide

	CY7C1470V33-250 CY7C1472V33-250 CY7C1474V33-250	CY7C1470V33-200 CY7C1472V33-200 CY7C1474V33-200	CY7C1470V33-167 CY7C1472V33-167 CY7C1474V33-167	Unit
Maximum Access Time	3.0	3.0	3.4	ns
Maximum Operating Current	500	500	450	mA
Maximum CMOS Standby Current	120	120	120	mA

Shaded areas contain advance information.
Please contact your local Cypress sales representative for availability of these parts.

Pin Configurations

100-pin TQFP Packages

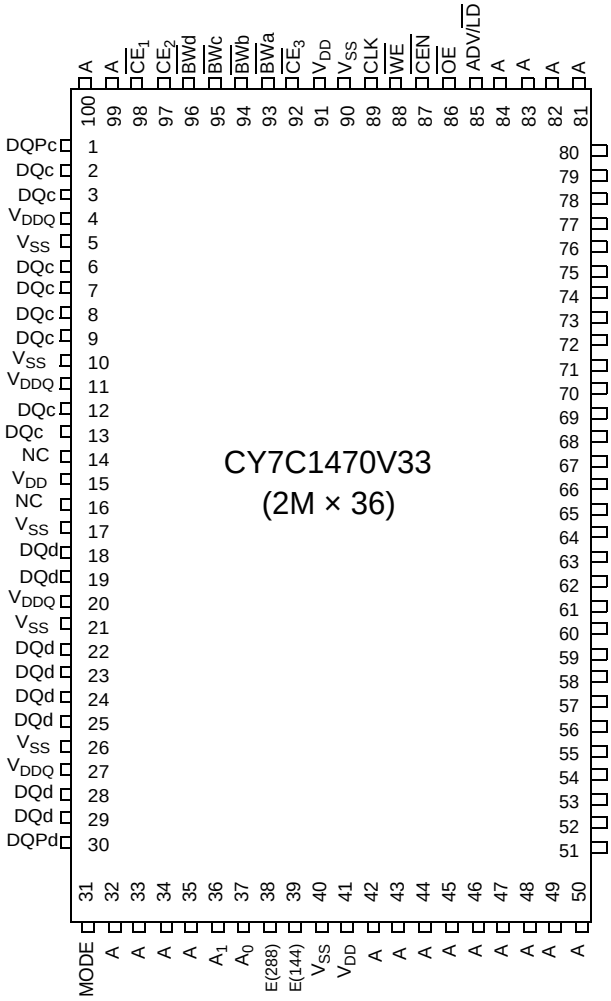

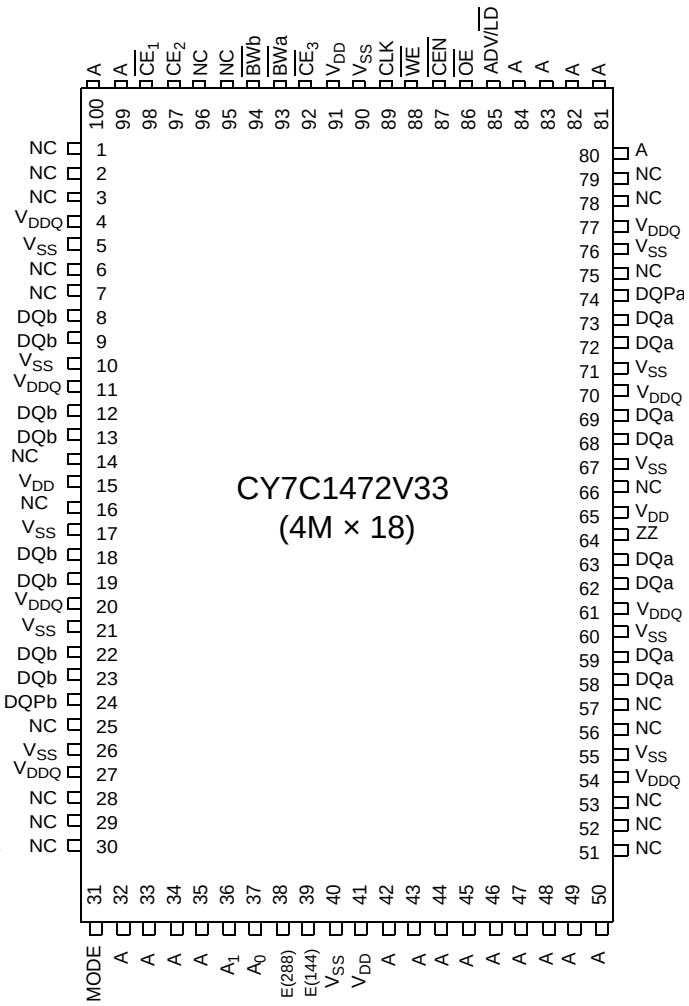

Pin Configurations (continued)

165-Ball fBGA Pinout

CY7C1470V33 (2M × 36)

	1	2	3	4	5	6	7	8	9	10	11
A	E(288)	A	$\overline{CE}_1$	$\overline{BW}_c$	$\overline{BW}_b$	$\overline{CE}_3$	$\overline{CEN}$	ADV/$\overline{LD}$	A	A	NC
B	NC	A	CE2	$\overline{BW}_d$	$\overline{BW}_a$	CLK	$\overline{WE}$	$\overline{OE}$	A	A	E(144)
C	DQP_c	NC	V_{DDQ}	V_{SS}	V_{SS}	V_{SS}	V_{SS}	V_{SS}	V_{DDQ}	NC	DQP_b
D	DQ_c	DQ_c	V_{DDQ}	V_{DD}	V_{SS}	V_{SS}	V_{SS}	V_{DD}	V_{DDQ}	DQ_b	DQ_b
E	DQ_c	DQ_c	V_{DDQ}	V_{DD}	V_{SS}	V_{SS}	V_{SS}	V_{DD}	V_{DDQ}	DQ_b	DQ_b
F	DQ_c	DQ_c	V_{DDQ}	V_{DD}	V_{SS}	V_{SS}	V_{SS}	V_{DD}	V_{DDQ}	DQ_b	DQ_b
G	DQ_c	DQ_c	V_{DDQ}	V_{DD}	V_{SS}	V_{SS}	V_{SS}	V_{DD}	V_{DDQ}	DQ_b	DQ_b
H	NC	NC	NC	V_{DD}	V_{SS}	V_{SS}	V_{SS}	V_{DD}	NC	NC	ZZ
J	DQ_d	DQ_d	V_{DDQ}	V_{DD}	V_{SS}	V_{SS}	V_{SS}	V_{DD}	V_{DDQ}	DQ_a	DQ_a
K	DQ_d	DQ_d	V_{DDQ}	V_{DD}	V_{SS}	V_{SS}	V_{SS}	V_{DD}	V_{DDQ}	DQ_a	DQ_a
L	DQ_d	DQ_d	V_{DDQ}	V_{DD}	V_{SS}	V_{SS}	V_{SS}	V_{DD}	V_{DDQ}	DQ_a	DQ_a
M	DQ_d	DQ_d	V_{DDQ}	V_{DD}	V_{SS}	V_{SS}	V_{SS}	V_{DD}	V_{DDQ}	DQ_a	DQ_a
N	DQP_d	NC	V_{DDQ}	V_{SS}	NC	NC	NC	V_{SS}	V_{DDQ}	NC	DQP_a
P	NC	A	A	A	TDI	A1	TDO	A	A	A	NC
R	MODE	A	A	A	TMS	A0	TCK	A	A	A	A

CY7C1472V33 (4M × 18)

	1	2	3	4	5	6	7	8	9	10	11
A	E(288)	A	$\overline{CE}_1$	$\overline{BW}_b$	NC	$\overline{CE}_3$	$\overline{CEN}$	ADV/$\overline{LD}$	A	A	A
B	NC	A	CE2	NC	$\overline{BW}_a$	CLK	$\overline{WE}$	$\overline{OE}$	A	A	E(144)
C	NC	NC	V_{DDQ}	V_{SS}	V_{SS}	V_{SS}	V_{SS}	V_{SS}	V_{DDQ}	NC	DQP_a
D	NC	DQ_b	V_{DDQ}	V_{DD}	V_{SS}	V_{SS}	V_{SS}	V_{DD}	V_{DDQ}	NC	DQ_a
E	NC	DQ_b	V_{DDQ}	V_{DD}	V_{SS}	V_{SS}	V_{SS}	V_{DD}	V_{DDQ}	NC	DQ_a
F	NC	DQ_b	V_{DDQ}	V_{DD}	V_{SS}	V_{SS}	V_{SS}	V_{DD}	V_{DDQ}	NC	DQ_a
G	NC	DQ_b	V_{DDQ}	V_{DD}	V_{SS}	V_{SS}	V_{SS}	V_{DD}	V_{DDQ}	NC	DQ_a
H	NC	NC	NC	V_{DD}	V_{SS}	V_{SS}	V_{SS}	V_{DD}	NC	NC	ZZ
J	DQ_b	NC	V_{DDQ}	V_{DD}	V_{SS}	V_{SS}	V_{SS}	V_{DD}	V_{DDQ}	DQ_a	NC
K	DQ_b	NC	V_{DDQ}	V_{DD}	V_{SS}	V_{SS}	V_{SS}	V_{DD}	V_{DDQ}	DQ_a	NC
L	DQ_b	NC	V_{DDQ}	V_{DD}	V_{SS}	V_{SS}	V_{SS}	V_{DD}	V_{DDQ}	DQ_a	NC
M	DQ_b	NC	V_{DDQ}	V_{DD}	V_{SS}	V_{SS}	V_{SS}	V_{DD}	V_{DDQ}	DQ_a	NC
N	DQP_b	NC	V_{DDQ}	V_{SS}	NC	NC	NC	V_{SS}	V_{DDQ}	NC	NC
P	NC	A	A	A	TDI	A1	TDO	A	A	A	NC
R	MODE	A	A	A	TMS	A0	TCK	A	A	A	A

Pin Configurations (continued)

209-ball PBGA
CY7C1474V33 (1M X 72)

	1	2	3	4	5	6	7	8	9	10	11
A	DQg	DQg	A	CE_2	A	ADV/$\overline{LD}$	A	$\overline{CE}_3$	A	DQb	DQb
B	DQg	DQg	$\overline{BWS}_c$	$\overline{BWS}_g$	NC	$\overline{WE}$	A	$\overline{BWS}_b$	$\overline{BWS}_f$	DQb	DQb
C	DQg	DQg	$\overline{BWS}_h$	$\overline{BWS}_d$	NC	$\overline{CE}_1$	NC	$\overline{BWS}_e$	$\overline{BWS}_a$	DQb	DQb
D	DQg	DQg	V_{SS}	NC	NC	$\overline{OE}$	NC	NC	V_{SS}	DQb	DQb
E	DQPg	DQPc	V_{DDQ}	V_{DDQ}	V_{DD}	V_{DD}	V_{DD}	V_{DDQ}	V_{DDQ}	DQPf	DQPb
F	DQc	DQc	V_{SS}	V_{SS}	V_{SS}	NC	V_{SS}	V_{SS}	V_{SS}	DQf	DQf
G	DQc	DQc	V_{DDQ}	V_{DDQ}	V_{DD}	NC	V_{DD}	V_{DDQ}	V_{DDQ}	DQf	DQf
H	DQc	DQc	V_{SS}	V_{SS}	V_{SS}	NC	V_{SS}	V_{SS}	V_{SSQ}	DQf	DQf
J	DQc	DQc	V_{DDQ}	V_{DDQ}	V_{DD}	NC	V_{DD}	V_{DDQ}	V_{DDQ}	DQf	DQf
K	NC	NC	CLK	NC	V_{SS}	$\overline{CEN}$	V_{SS}	NC	NC	NC	NC
L	DQh	DQh	V_{DDQ}	V_{DDQ}	V_{DD}	NC	V_{DD}	V_{DDQ}	V_{DDQ}	DQa	DQa
M	DQh	DQh	V_{SS}	V_{SS}	V_{SS}	NC	V_{SS}	V_{SS}	V_{SS}	DQa	DQa
N	DQh	DQh	V_{DDQ}	V_{DDQ}	V_{DD}	NC	V_{DD}	V_{DDQ}	V_{DDQ}	DQa	DQa
P	DQh	DQh	V_{SS}	V_{SS}	V_{SS}	ZZ	V_{SS}	V_{SS}	V_{SS}	DQa	DQa
R	DQPd	DQPh	V_{DDQ}	V_{DDQ}	V_{DD}	V_{DD}	V_{DD}	V_{DDQ}	V_{DDQ}	DQPa	DQPe
T	DQd	DQd	V_{SS}	NC	NC	MODE	NC	NC	V_{SS}	DQe	DQe
U	DQd	DQd	NC	A	A	A	A	A	NC	DQe	DQe
V	DQd	DQd	A	A	A	A1	A	A	A	DQe	DQe
W	DQd	DQd	TMS	TDI	A	A0	A	TDO	TCK	DQe	DQe

Pin Definitions

Pin Name	I/O Type	Pin Description
A0 A1 A	Input-Synchronous	**Address Inputs used to select one of the address locations**. Sampled at the rising edge of the CLK.
$\overline{BW}_a$ $\overline{BW}_b$ $\overline{BW}_c$ $\overline{BW}_d$ $\overline{BW}_e$ $\overline{BW}_f$ $\overline{BW}_g$ $\overline{BW}_h$	Input-Synchronous	**Byte Write Select Inputs, active LOW**. Qualified with $\overline{WE}$ to conduct writes to the SRAM. Sampled on the rising edge of CLK. BW_a controls DQ_a and DQP_a, BW_b controls DQ_b and DQP_b, BW_c controls DQ_c and DQP_c, BW_d controls DQ_d and DQP_d, BW_e controls DQ_e and DQP_e, BW_f controls DQ_f and DQP_f, BW_g controls DQ_g and DQP_g, BW_h controls DQ_h and DQP_h.
$\overline{WE}$	Input-Synchronous	**Write Enable Input, active LOW**. Sampled on the rising edge of CLK if $\overline{CEN}$ is active LOW. This signal must be asserted LOW to initiate a write sequence.
ADV/$\overline{LD}$	Input-Synchronous	**Advance/Load Input used to advance the on-chip address counter or load a new address**. When HIGH (and $\overline{CEN}$ is asserted LOW) the internal burst counter is advanced. When LOW, a new address can be loaded into the device for an access. After being deselected, ADV/$\overline{LD}$ should be driven LOW in order to load a new address.
CLK	Input-Clock	**Clock Input**. Used to capture all synchronous inputs to the device. CLK is qualified with $\overline{CEN}$. CLK is only recognized if $\overline{CEN}$ is active LOW.
$\overline{CE}_1$	Input-Synchronous	**Chip Enable 1 Input, active LOW**. Sampled on the rising edge of CLK. Used in conjunction with CE_2 and $\overline{CE}_3$ to select/deselect the device.
CE_2	Input-Synchronous	**Chip Enable 2 Input, active HIGH**. Sampled on the rising edge of CLK. Used in conjunction with $\overline{CE}_1$ and $\overline{CE}_3$ to select/deselect the device.
$\overline{CE}_3$	Input-Synchronous	**Chip Enable 3 Input, active LOW**. Sampled on the rising edge of CLK. Used in conjunction with CE_1 and CE_2 to select/deselect the device.
$\overline{OE}$	Input-Asynchronous	**Output Enable, active LOW**. Combined with the synchronous logic block inside the device to control the direction of the I/O pins. When LOW, the I/O pins are allowed to behave as outputs. When deasserted HIGH, I/O pins are tri-stated, and act as input data pins. $\overline{OE}$ is masked during the data portion of a write sequence, during the first clock when emerging from a deselected state and when the device has been deselected.
$\overline{CEN}$	Input-Synchronous	**Clock Enable Input, active LOW**. When asserted LOW the clock signal is recognized by the SRAM. When deasserted HIGH the clock signal is masked. Since deasserting $\overline{CEN}$ does not deselect the device, $\overline{CEN}$ can be used to extend the previous cycle when required.
DQ_S	I/O-Synchronous	**Bidirectional Data I/O lines**. As inputs, they feed into an on-chip data register that is triggered by the rising edge of CLK. As outputs, they deliver the data contained in the memory location specified by $A_{[17:0]}$ during the previous clock rise of the read cycle. The direction of the pins is controlled by $\overline{OE}$ and the internal control logic. When $\overline{OE}$ is asserted LOW, the pins can behave as outputs. When HIGH, DQ_a–DQ_d are placed in a tri-state condition. The outputs are automatically tri-stated during the data portion of a write sequence, during the first clock when emerging from a deselected state, and when the device is deselected, regardless of the state of $\overline{OE}$.
DQP_X	I/O-Synchronous	**Bidirectional Data Parity I/O lines**. Functionally, these signals are identical to DQ_X. During write sequences, DQP_a is controlled by BW_a, DQP_b is controlled by BW_b, DQP_c is controlled by BW_c, and DQP_d is controlled by BW_d, DQP_e is controlled by BW_e, DQP_f is controlled by BW_f, DQP_g is controlled by BW_g, DQP_h is controlled by BW_h.
MODE	Input Strap Pin	**Mode Input**. Selects the burst order of the device. Tied HIGH selects the interleaved burst order. Pulled LOW selects the linear burst order. MODE should not change states during operation. When left floating MODE will default HIGH, to an interleaved burst order.
TDO	JTAG Serial Output Synchronous	**Serial data-out to the JTAG circuit**. Delivers data on the negative edge of TCK.
TDI	JTAG Serial Input Synchronous	**Serial data-In to the JTAG circuit**. Sampled on the rising edge of TCK.

Pin Definitions (continued)

Pin Name	I/O Type	Pin Description
TMS	Test Mode Select Synchronous	**This pin controls the Test Access Port state machine**. Sampled on the rising edge of TCK.
TCK	JTAG Clock	**Clock input to the JTAG circuitry**.
V_{DD}	Power Supply	**Power supply inputs to the core of the device**.
V_{DDQ}	I/O Power Supply	**Power supply for the I/O circuitry**.
V_{SS}	Ground	**Ground for the device**. Should be connected to ground of the system.
NC	–	**No connects**. This pin is not connected to the die.
E(144, 288)	–	**These pins are not connected**. They will be used for expansion to the 144M and 288M densities.
ZZ	Input-Asynchronous	**ZZ "sleep" Input**. This active HIGH input places the device in a non-time critical "sleep" condition with data integrity preserved. During normal operation, this pin can be connected to Vss or left floating.

Functional Overview

The CY7C1470V33, CY7C1472V33, and CY7C1474V33 are synchronous-pipelined Burst NoBL SRAMs designed specifically to eliminate wait states during Write/Read transitions. All synchronous inputs pass through input registers controlled by the rising edge of the clock. The clock signal is qualified with the Clock Enable input signal ($\overline{CEN}$). If $\overline{CEN}$ is HIGH, the clock signal is not recognized and all internal states are maintained. All synchronous operations are qualified with $\overline{CEN}$. All data outputs pass through output registers controlled by the rising edge of the clock. Maximum access delay from the clock rise (t_{CO}) is 3.0 ns (225-MHz device).

Accesses can be initiated by asserting all three Chip Enables ($\overline{CE}_1$, CE_2, $\overline{CE}_3$) active at the rising edge of the clock. If Clock Enable ($\overline{CEN}$) is active LOW and ADV/LD is asserted LOW, the address presented to the device will be latched. The access can either be a Read or Write operation, depending on the status of the Write Enable ($\overline{WE}$). $\overline{BW}_{[x]}$ can be used to conduct Byte Write operations.

Write operations are qualified by the Write Enable ($\overline{WE}$). All Writes are simplified with on-chip synchronous self-timed write circuitry.

Three synchronous Chip Enables ($\overline{CE}_1$, CE_2, $\overline{CE}_3$) and an asynchronous Output Enable ($\overline{OE}$) simplify depth expansion. All operations (Reads, Writes, and Deselects) are pipelined. ADV/LD should be driven LOW once the device has been deselected in order to load a new address for the next operation.

Single Read Accesses

A read access is initiated when the following conditions are satisfied at clock rise: (1) $\overline{CEN}$ is asserted LOW, (2) $\overline{CE}_1$, CE_2, and $\overline{CE}_3$ are ALL asserted active, (3) the Write Enable input signal $\overline{WE}$ is deasserted HIGH, and (4) ADV/LD is asserted LOW. The address presented to the address inputs is latched into the Address Register and presented to the memory core and control logic. The control logic determines that a read access is in progress and allows the requested data to propagate to the input of the output register. At the rising edge of the next clock the requested data is allowed to propagate through the output register and onto the data bus within 3.0 ns (225-MHz device) provided $\overline{OE}$ is active LOW. After the first clock of the Read access the output buffers are controlled by $\overline{OE}$ and the internal control logic. $\overline{OE}$ must be driven LOW in order for the device to drive out the requested data. During the second clock, a subsequent operation (Read/Write/Deselect) can be initiated. Deselecting the device is also pipelined. Therefore, when the SRAM is deselected at clock rise by one of the chip enable signals, its output will tri-state following the next clock rise.

Burst Read Accesses

The CY7C1470V33/CY7C1472V33/CY7C1474V33 have an on-chip burst counter that allows the user the ability to supply a single address and conduct up to four Reads without reasserting the address inputs. ADV/LD must be driven LOW in order to load a new address into the SRAM, as described in the Single Read Access section above. The sequence of the burst counter is determined by the MODE input signal. A LOW input on MODE selects a linear burst mode, a HIGH selects an interleaved burst sequence. Both burst counters use A0 and A1 in the burst sequence, and will wrap-around when incremented sufficiently. A HIGH input on ADV/LD will increment the internal burst counter regardless of the state of chip enables inputs or $\overline{WE}$. $\overline{WE}$ is latched at the beginning of a burst cycle. Therefore, the type of access (Read or Write) is maintained throughout the burst sequence.

Single Write Accesses

Write accesses are initiated when the following conditions are satisfied at clock rise: (1) $\overline{CEN}$ is asserted LOW, (2) $\overline{CE}_1$, CE_2, and $\overline{CE}_3$ are ALL asserted active, and (3) the Write signal $\overline{WE}$ is asserted LOW. The address presented to the address inputs is loaded into the Address Register. The write signals are latched into the Control Logic block.

On the subsequent clock rise the data lines are automatically tri-stated regardless of the state of the $\overline{OE}$ input signal. This allows the external logic to present the data on DQ and DQP ($DQ_{a,b,c,d,e,f,g,h}$/$DQP_{a,b,c,d,e,f,g,h}$ for CY7C1474V33, $DQ_{a,b,c,d}$/$DQP_{a,b,c,d}$ for CY7C1470V33 and $DQ_{a,b}$/$DQP_{a,b}$ for CY7C1472V33). In addition, the address for the subsequent access (Read/Write/Deselect) is latched into the Address Register (provided the appropriate control signals are asserted).

On the next clock rise the data presented to DQ and DQP ($DQ_{a,b,c,d,e,f,g,h}$/$DQP_{a,b,c,d,e,f,g,h}$ for CY7C1474V33, $DQ_{a,b,c,d}$/$DQP_{a,b,c,d}$ for CY7C1470V33 & $DQ_{a,b}$/$DQP_{a,b}$ for CY7C1472V33) (or a subset for byte write operations, see

Write Cycle Description table for details) inputs is latched into the device and the write is complete.

The data written during the Write operation is controlled by $\overline{BW}$ ($\overline{BW}_{a,b,c,d,e,f,g,h}$ for CY7C1474V33, $\overline{BW}_{a,b,c,d}$ for CY7C1470V33 and $\overline{BW}_{a,b}$ for CY7C1472V33) signals. The CY7C1470V33/CY7C1472V33/CY7C1474V33 provides Byte Write capability that is described in the Write Cycle Description table. Asserting the Write Enable input ($\overline{WE}$) with the selected Byte Write Select ($\overline{BW}$) input will selectively write to only the desired bytes. Bytes not selected during a Byte Write operation will remain unaltered. A synchronous self-timed Write mechanism has been provided to simplify the Write operations. Byte Write capability has been included in order to greatly simplify Read/Modify/Write sequences, which can be reduced to simple Byte Write operations.

Because the CY7C1470V33/CY7C1472V33/CY7C1474V33 are common I/O devices, data should not be driven into the device while the outputs are active. The Output Enable ($\overline{OE}$) can be deasserted HIGH before presenting data to the DQ and DQP ($DQ_{a,b,c,d,e,f,g,h}$/$DQP_{a,b,c,d,e,f,g,h}$ for CY7C1474V33, $DQ_{a,b,c,d}$/$DQP_{a,b,c,d}$ for CY7C1470V33 and $DQ_{a,b}$/$DQP_{a,b}$ for CY7C1472V33) inputs. Doing so will tri-state the output drivers. As a safety precaution, DQ and DQP ($DQ_{a,b,c,d,e,f,g,h}$/ $DQP_{a,b,c,d,e,f,g,h}$ for CY7C1474V33, $DQ_{a,b,c,d}$/ $DQP_{a,b,c,d}$ for CY7C1470V33 and $DQ_{a,b}$/$DQP_{a,b}$ for CY7C1472V33) are automatically tri-stated during the data portion of a Write cycle, regardless of the state of $\overline{OE}$.

Burst Write Accesses

The CY7C1470V33/CY7C1472V33/CY7C1474V33 has an on-chip burst counter that allows the user the ability to supply a single address and conduct up to four Write operations without reasserting the address inputs. ADV/$\overline{LD}$ must be driven LOW in order to load the initial address, as described in the Single Write Access section above. When ADV/$\overline{LD}$ is driven HIGH on the subsequent clock rise, the Chip Enables ($\overline{CE}_1$, CE_2, and $\overline{CE}_3$) and $\overline{WE}$ inputs are ignored and the burst counter is incremented. The correct BW ($\overline{BW}_{a,b,c,d,e,f,g,h}$ for CY7C1474V33, $\overline{BW}_{a,b,c,d}$ for CY7C1470V33 and $\overline{BW}_{a,b}$ for CY7C1472V33) inputs must be driven in each cycle of the burst write in order to write the correct bytes of data.

Sleep Mode

The ZZ input pin is an asynchronous input. Asserting ZZ places the SRAM in a power conservation “sleep” mode. Two clock cycles are required to enter into or exit from this “sleep” mode. While in this mode, data integrity is guaranteed. Accesses pending when entering the “sleep” mode are not considered valid nor is the completion of the operation guaranteed. The device must be deselected prior to entering the “sleep” mode. $\overline{CE}_1$, CE_2, and $\overline{CE}_3$, must remain inactive for the duration of t_{ZZREC} after the ZZ input returns LOW.

Interleaved Burst Address Table (MODE = Floating or V_{DD})

First Address	Second Address	Third Address	Fourth Address
A1,A0	A1,A0	A1,A0	A1,A0
00	01	10	11
01	00	11	10
10	11	00	01
11	10	01	00

Linear Burst Address Table (MODE = GND)

First Address	Second Address	Third Address	Fourth Address
A1,A0	A1,A0	A1,A0	A1,A0
00	01	10	11
01	10	11	00
10	11	00	01
11	00	01	10

ZZ Mode Electrical Characteristics

Parameter	Description	Test Conditions	Min.	Max	Unit
I_{DDZZ}	Sleep mode standby current	$ZZ \geq V_{DD} - 0.2V$		120	mA
t_{ZZS}	Device operation to ZZ	$ZZ \geq V_{DD} - 0.2V$		$2t_{CYC}$	ns
t_{ZZREC}	ZZ recovery time	$ZZ \leq 0.2V$	$2t_{CYC}$		ns
t_{ZZI}	ZZ active to sleep current	This parameter is sampled		$2t_{CYC}$	ns
t_{RZZI}	ZZ Inactive to exit sleep current	This parameter is sampled	0		ns

Truth Table[1, 2, 3, 4, 5, 6, 7]

Operation	Address Used	$\overline{CE}$	ZZ	ADV/$\overline{LD}$	$\overline{WE}$	$\overline{BW_X}$	$\overline{OE}$	$\overline{CEN}$	CLK	DQ
Deselect Cycle	None	H	L	L	X	X	X	L	L-H	Tri-State
Continue Deselect Cycle	None	X	L	H	X	X	X	L	L-H	Tri-State
Read Cycle (Begin Burst)	External	L	L	L	H	X	L	L	L-H	Data Out (Q)
Read Cycle (Continue Burst)	Next	X	L	H	X	X	L	L	L-H	Data Out (Q)
NOP/Dummy Read (Begin Burst)	External	L	L	L	H	X	H	L	L-H	Tri-State
Dummy Read (Continue Burst)	Next	X	L	H	X	X	H	L	L-H	Tri-State
Write Cycle (Begin Burst)	External	L	L	L	L	L	X	L	L-H	Data In (D)
Write Cycle (Continue Burst)	Next	X	L	H	X	L	X	L	L-H	Data In (D)
NOP/Write Abort (Begin Burst)	None	L	L	L	L	H	X	L	L-H	Tri-State
Write Abort (Continue Burst)	Next	X	L	H	X	H	X	L	L-H	Tri-State
Ignore Clock Edge (Stall)	Current	X	L	X	X	X	X	H	L-H	-
Sleep Mode	None	X	H	X	X	X	X	X	X	Tri-State

Notes:

1. X = "Don't Care", H = Logic HIGH, L = Logic LOW, $\overline{CE}$ stands for ALL Chip Enables active. $\overline{BW}$x = 0 signifies at least one Byte Write Select is active, $\overline{BW}$x = Valid signifies that the desired byte write selects are asserted, see Write Cycle Description table for details.
2. Write is defined by $\overline{WE}$ and $\overline{BW}_{[a:d]}$. See Write Cycle Description table for details.
3. When a Write cycle is detected, all I/Os are tri-stated, even during Byte Writes.
4. The DQ and DQP pins are controlled by the current cycle and the $\overline{OE}$ signal.
5. $\overline{CEN}$ = H inserts wait states.
6. Device will power-up deselected and the I/Os in a tri-state condition, regardless of $\overline{OE}$.
7. $\overline{OE}$ is asynchronous and is not sampled with the clock rise. It is masked internally during Write cycles. During a Read cycle DQ_s and $DQP_{[a:d]}$ = Tri-state when $\overline{OE}$ is inactive or when the device is deselected, and DQ_s= data when $\overline{OE}$ is active.

Partial Write Cycle Description[1, 2, 3, 8]

Function (CY7C1470V33)	$\overline{WE}$	$\overline{BW_d}$	$\overline{BW_c}$	$\overline{BW_b}$	$\overline{BW_a}$
Read	H	X	X	X	X
Write – No bytes written	L	H	H	H	H
Write Byte a – (DQ_a and DQP_a)	L	H	H	H	L
Write Byte b – (DQ_b and DQP_b)	L	H	H	L	H
Write Bytes b, a	L	H	H	L	L
Write Byte c – (DQ_c and DQP_c)	L	H	L	H	H
Write Bytes c, a	L	H	L	H	L
Write Bytes c, b	L	H	LL	L	H
Write Bytes c, b, a	L	H	L	L	L
Write Byte d – (DQ_d and DQP_d)	L	L	H	H	H
Write Bytes d, a	L	L	H	H	L
Write Bytes d, b	L	L	H	L	H
Write Bytes d, b, a	L	L	H	L	L
Write Bytes d, c	L	L	L	H	H
Write Bytes d, c, a	L	L	L	H	L
Write Bytes d, c, b	L	L	L	L	H
Write All Bytes	L	L	L	L	L

Function (CY7C1472V33)	$\overline{WE}$	$\overline{BW_b}$	$\overline{BW_a}$
Read	H	x	x
Write – No Bytes Written	L	H	H
Write Byte a – (DQ_a and DQP_a)	L	H	L
Write Byte b – (DQ_b and DQP_b)	L	L	H
Write Both Bytes	L	L	L

Function (CY7C1474V33)	$\overline{WE}$	$\overline{BW_x}$
Read	H	x
Write – No Bytes Written	L	H
Write Byte X – (DQ_x and DQP_x)	L	L
Write All Bytes	L	All $\overline{BW}$ = L

Note:
8. Table only lists a partial listing of the Byte Write combinations. Any combination of $\overline{BW}_{[a:d]}$ is valid. Appropriate Write will be done based on which Byte Write is active.

IEEE 1149.1 Serial Boundary Scan (JTAG)

The CY7C1470V33/CY7C1472V33/CY7C1474V33 incorporates a serial boundary scan test access port (TAP). This port operates in accordance with IEEE Standard 1149.1-1990 but does not have the set of functions required for full 1149.1 compliance. These functions from the IEEE specification are excluded because their inclusion places an added delay in the critical speed path of the SRAM. Note that the TAP controller functions in a manner that does not conflict with the operation of other devices using 1149.1 fully compliant TAPs. The TAP operates using JEDEC-standard 3.3V or 2.5V I/O logic levels.

The CY7C1470V33/CY7C1472V33/CY7C1474V33 contains a TAP controller, instruction register, boundary scan register, bypass register, and ID register.

Disabling the JTAG Feature

It is possible to operate the SRAM without using the JTAG feature. To disable the TAP controller, TCK must be tied LOW (V_{SS}) to prevent clocking of the device. TDI and TMS are internally pulled up and may be unconnected. They may alternately be connected to V_{DD} through a pull-up resistor. TDO should be left unconnected. Upon power-up, the device will come up in a reset state which will not interfere with the operation of the device.

TAP Controller State Diagram

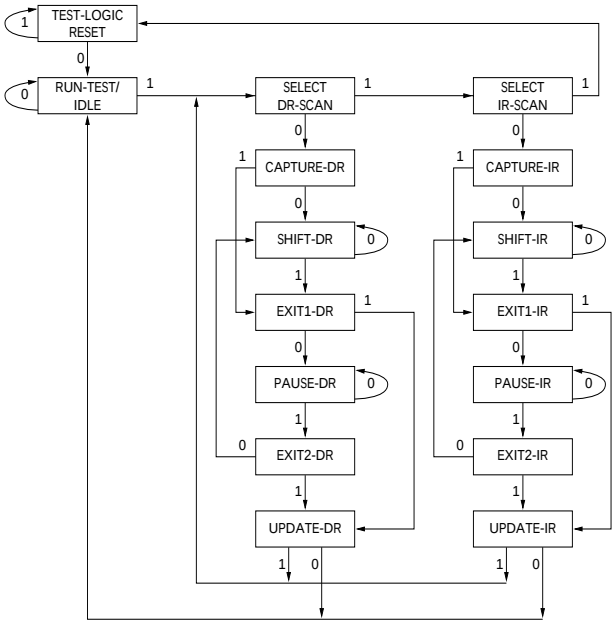

The 0/1 next to each state represents the value of TMS at the rising edge of TCK.

Test Access Port (TAP)

Test Clock (TCK)

The test clock is used only with the TAP controller. All inputs are captured on the rising edge of TCK. All outputs are driven from the falling edge of TCK.

Test MODE SELECT (TMS)

The TMS input is used to give commands to the TAP controller and is sampled on the rising edge of TCK. It is allowable to leave this ball unconnected if the TAP is not used. The ball is pulled up internally, resulting in a logic HIGH level.

Test Data-In (TDI)

The TDI ball is used to serially input information into the registers and can be connected to the input of any of the registers. The register between TDI and TDO is chosen by the instruction that is loaded into the TAP instruction register. For information on loading the instruction register, see the TAP Controller State Diagram. TDI is internally pulled up and can be unconnected if the TAP is unused in an application. TDI is connected to the most significant bit (MSB) of any register. (See Tap Controller Block Diagram.)

Test Data-Out (TDO)

The TDO output ball is used to serially clock data-out from the registers. The output is active depending upon the current state of the TAP state machine. The output changes on the falling edge of TCK. TDO is connected to the least significant bit (LSB) of any register. (See Tap Controller State Diagram.)

TAP Controller Block Diagram

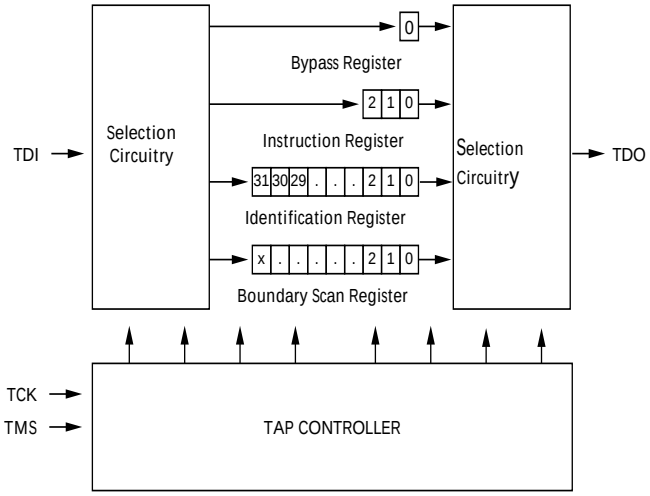

Performing a TAP Reset

A RESET is performed by forcing TMS HIGH (V_{DD}) for five rising edges of TCK. This RESET does not affect the operation of the SRAM and may be performed while the SRAM is operating.

At power-up, the TAP is reset internally to ensure that TDO comes up in a High-Z state.

TAP Registers

Registers are connected between the TDI and TDO balls and allow data to be scanned into and out of the SRAM test circuitry. Only one register can be selected at a time through the instruction register. Data is serially loaded into the TDI ball on the rising edge of TCK. Data is output on the TDO ball on the falling edge of TCK.

Instruction Register

Three-bit instructions can be serially loaded into the instruction register. This register is loaded when it is placed between the TDI and TDO balls as shown in the Tap Controller Block Diagram. Upon power-up, the instruction register is loaded with the IDCODE instruction. It is also loaded with the IDCODE instruction if the controller is placed in a reset state as described in the previous section.

When the TAP controller is in the Capture-IR state, the two least significant bits are loaded with a binary “01” pattern to allow for fault isolation of the board-level serial test data path.

Bypass Register

To save time when serially shifting data through registers, it is sometimes advantageous to skip certain chips. The bypass register is a single-bit register that can be placed between the TDI and TDO balls. This allows data to be shifted through the SRAM with minimal delay. The bypass register is set LOW (V_{SS}) when the BYPASS instruction is executed.

Boundary Scan Register

The boundary scan register is connected to all the input and bidirectional balls on the SRAM.

The boundary scan register is loaded with the contents of the RAM I/O ring when the TAP controller is in the Capture-DR state and is then placed between the TDI and TDO balls when the controller is moved to the Shift-DR state. The EXTEST, SAMPLE/PRELOAD and SAMPLE Z instructions can be used to capture the contents of the I/O ring.

The Boundary Scan Order tables show the order in which the bits are connected. Each bit corresponds to one of the bumps on the SRAM package. The MSB of the register is connected to TDI and the LSB is connected to TDO.

Identification (ID) Register

The ID register is loaded with a vendor-specific, 32-bit code during the Capture-DR state when the IDCODE command is loaded in the instruction register. The IDCODE is hardwired into the SRAM and can be shifted out when the TAP controller is in the Shift-DR state. The ID register has a vendor code and other information described in the Identification Register Definitions table.

TAP Instruction Set

Overview

Eight different instructions are possible with the three-bit instruction register. All combinations are listed in the Instruction Codes table. Three of these instructions are listed as RESERVED and should not be used. The other five instructions are described in detail below.

The TAP controller used in this SRAM is not fully compliant to the 1149.1 convention because some of the mandatory 1149.1 instructions are not fully implemented.

The TAP controller cannot be used to load address data or control signals into the SRAM and cannot preload the I/O buffers. The SRAM does not implement the 1149.1 commands EXTEST or INTEST or the PRELOAD portion of SAMPLE/PRELOAD; rather, it performs a capture of the I/O ring when these instructions are executed.

Instructions are loaded into the TAP controller during the Shift-IR state when the instruction register is placed between TDI and TDO. During this state, instructions are shifted through the instruction register through the TDI and TDO balls. To execute the instruction once it is shifted in, the TAP controller needs to be moved into the Update-IR state.

EXTEST

EXTEST is a mandatory 1149.1 instruction which is to be executed whenever the instruction register is loaded with all 0s. EXTEST is not implemented in this SRAM TAP controller, and therefore this device is not compliant to 1149.1. The TAP controller does recognize an all-0 instruction.

When an EXTEST instruction is loaded into the instruction register, the SRAM responds as if a SAMPLE/PRELOAD instruction has been loaded. There is one difference between the two instructions. Unlike the SAMPLE/PRELOAD instruction, EXTEST places the SRAM outputs in a High-Z state.

IDCODE

The IDCODE instruction causes a vendor-specific, 32-bit code to be loaded into the instruction register. It also places the instruction register between the TDI and TDO balls and allows the IDCODE to be shifted out of the device when the TAP controller enters the Shift-DR state.

The IDCODE instruction is loaded into the instruction register upon power-up or whenever the TAP controller is given a test logic reset state.

SAMPLE Z

The SAMPLE Z instruction causes the boundary scan register to be connected between the TDI and TDO balls when the TAP controller is in a Shift-DR state. It also places all SRAM outputs into a High-Z state.

SAMPLE/PRELOAD

SAMPLE/PRELOAD is a 1149.1 mandatory instruction. The PRELOAD portion of this instruction is not implemented, so the device TAP controller is not fully 1149.1 compliant.

When the SAMPLE/PRELOAD instruction is loaded into the instruction register and the TAP controller is in the Capture-DR state, a snapshot of data on the inputs and bidirectional balls is captured in the boundary scan register.

The user must be aware that the TAP controller clock can only operate at a frequency up to 20 MHz, while the SRAM clock operates more than an order of magnitude faster. Because there is a large difference in the clock frequencies, it is possible that during the Capture-DR state, an input or output will undergo a transition. The TAP may then try to capture a signal while in transition (metastable state). This will not harm the device, but there is no guarantee as to the value that will be captured. Repeatable results may not be possible.

To guarantee that the boundary scan register will capture the correct value of a signal, the SRAM signal must be stabilized long enough to meet the TAP controller’s capture set-up plus hold time (t_{CS} plus t_{CH}).

The SRAM clock input might not be captured correctly if there is no way in a design to stop (or slow) the clock during a SAMPLE/PRELOAD instruction. If this is an issue, it is still

possible to capture all other signals and simply ignore the value of the CLK captured in the boundary scan register.

Once the data is captured, it is possible to shift out the data by putting the TAP into the Shift-DR state. This places the boundary scan register between the TDI and TDO balls.

Note that since the PRELOAD part of the command is not implemented, putting the TAP to the Update-DR state while performing a SAMPLE/PRELOAD instruction will have the same effect as the Pause-DR command.

BYPASS

When the BYPASS instruction is loaded in the instruction register and the TAP is placed in a Shift-DR state, the bypass register is placed between the TDI and TDO balls. The advantage of the BYPASS instruction is that it shortens the boundary scan path when multiple devices are connected together on a board.

Reserved

These instructions are not implemented but are reserved for future use. Do not use these instructions.

TAP Timing

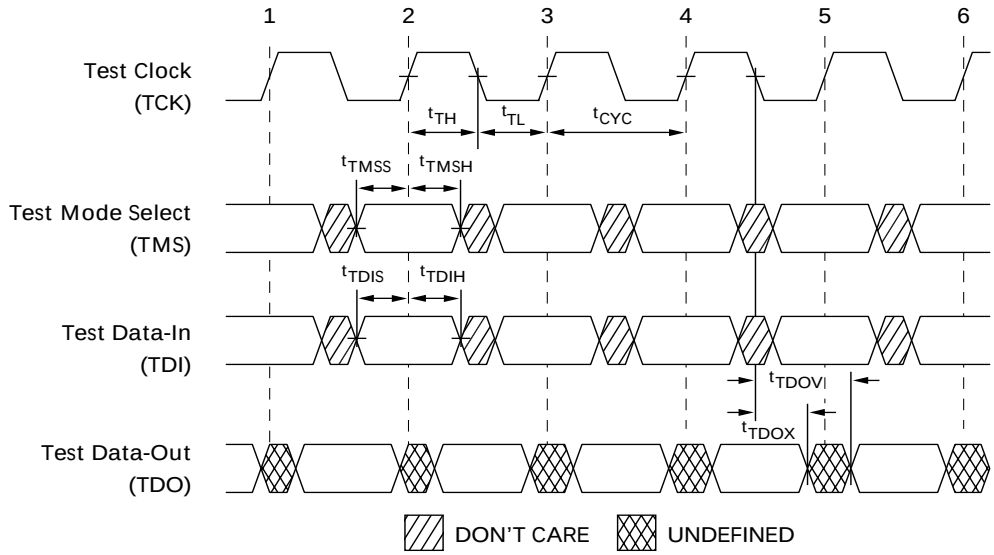

TAP AC Switching Characteristics Over the Operating Range[9, 10]

Parameter	Description	Min.	Max	Unit
Clock				
t_{TCYC}	TCK Clock Cycle Time	50		ns
t_{TF}	TCK Clock Frequency		20	MHz
t_{TH}	TCK Clock HIGH time	25		ns
t_{TL}	TCK Clock LOW time	25		ns
Output Times				
t_{TDOV}	TCK Clock LOW to TDO Valid		5	ns
t_{TDOX}	TCK Clock LOW to TDO Invalid	0		ns
Set-up Times				
t_{TMSS}	TMS Set-up to TCK Clock Rise	5		ns
t_{TDIS}	TDI Set-up to TCK Clock Rise	5		ns
t_{CS}	Capture Set-up to TCK Rise	5		ns
Hold Times				
t_{TMSH}	TMS Hold after TCK Clock Rise	5		ns
t_{TDIH}	TDI Hold after Clock Rise	5		ns
t_{CH}	Capture Hold after Clock Rise	5		ns

Notes:
9. t_{CS} and t_{CH} refer to the set-up and hold time requirements of latching data from the boundary scan register.
10. Test conditions are specified using the load in TAP AC Test Conditions. t_R/t_F = 1 ns.

3.3V TAP AC Test Conditions

Input pulse levels ..... V_{SS} to 3.3V
Input rise and fall times ..... 1 ns
Input timing reference levels 1.5V
Output reference levels 1.5V
Test load termination supply voltage 1.5V

2.5V TAP AC Test Conditions

Input pulse levels ..... V_{SS} to 2.5V
Input rise and fall time .....1 ns
Input timing reference levels..... 1.25V
Output reference levels 1.25V
Test load termination supply voltage 1.25V

3.3V TAP AC Output Load Equivalent

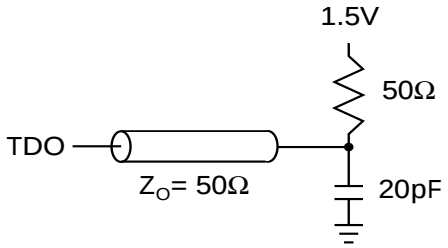

2.5V TAP AC Output Load Equivalent

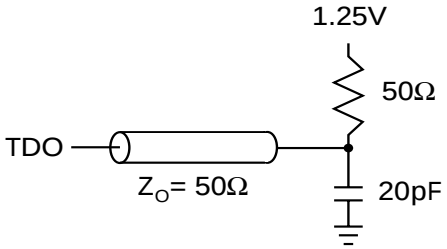

TAP DC Electrical Characteristics And Operating Conditions

(0°C < T_A < +70°C; V_{DD} = 3.135V to 3.6V unless otherwise noted)[11]

Parameter	Description	Test Conditions		Min.	Max.	Unit
V_{OH1}	Output HIGH Voltage	I_{OH} = –4.0 mA, V_{DDQ} = 3.3V		2.4		V
		I_{OH} = –1.0 mA, V_{DDQ} = 2.5V		2.0		V
V_{OH2}	Output HIGH Voltage	I_{OH} = –100 µA	V_{DDQ} = 3.3V	2.9		V
			V_{DDQ} = 2.5V	2.1		V
V_{OL1}	Output LOW Voltage	I_{OL} = 8.0 mA	V_{DDQ} = 3.3V		0.4	V
		I_{OL} = 1.0 mA	V_{DDQ} = 2.5V		0.4	V
V_{OL2}	Output LOW Voltage	I_{OL} = 100 µA	V_{DDQ} = 3.3V		0.2	V
			V_{DDQ} = 2.5V		0.2	V
V_{IH}	Input HIGH Voltage		V_{DDQ} = 3.3V	2.0	V_{DD} + 0.3	V
			V_{DDQ} = 2.5V	1.7	V_{DD} + 0.3	V
V_{IL}	Input LOW Voltage		V_{DDQ} = 3.3V	–0.3	0.8	V
			V_{DDQ} = 2.5V	–0.3	0.7	V
I_X	Input Load Current	GND ≤ V_{IN} ≤ V_{DDQ}		–5	5	µA

Note:
11. All voltages referenced to V_{SS} (GND.

Identification Register Definitions

Instruction Field	CY7C1470V33 (2M x 36)	CY7C1472V33 (4M x 18)	CY7C1474V33 (1M x 72)	Description
Revision Number (31:29)	000	000	000	Describes the version number
Device Depth (28:24)[12]	01011	01011	01011	Reserved for internal use
Architecture/Memory Type(23:18)	001000	001000	001000	Defines memory type and architecture
Bus Width/Density(17:12)	100100	010100	110100	Defines width and density
Cypress JEDEC ID Code (11:1)	00000110100	00000110100	00000110100	Allows unique identification of SRAM vendor
ID Register Presence Indicator (0)	1	1	1	Indicates the presence of an ID register

Scan Register Sizes

Register Name	Bit Size (x36)	Bit Size (x18)	Bit Size (x72)
Instruction	3	3	3
Bypass	1	1	1
ID	32	32	32
Boundary Scan Order-165FBGA	71	52	-
Boundary Scan Order- 209BGA	-	-	110

Identification Codes

Instruction	Code	Description
EXTEST	000	Captures I/O ring contents. Places the boundary scan register between TDI and TDO. Forces all SRAM outputs to High-Z state. This instruction is not 1149.1 compliant.
IDCODE	001	Loads the ID register with the vendor ID code and places the register between TDI and TDO. This operation does not affect SRAM operations.
SAMPLE Z	010	Captures I/O ring contents. Places the boundary scan register between TDI and TDO. Forces all SRAM output drivers to a High-Z state.
RESERVED	011	Do Not Use: This instruction is reserved for future use.
SAMPLE/PRELOAD	100	Captures I/O ring contents. Places the boundary scan register between TDI and TDO. Does not affect SRAM operation. This instruction does not implement 1149.1 preload function and is therefore not 1149.1 compliant.
RESERVED	101	Do Not Use: This instruction is reserved for future use.

Note:
12. Bit #24 is “1” in the ID Register Definitions for both 2.5V and 3.3V versions of this device.

Boundary Scan Exit Order (x36)

Bit #	165-Ball ID
1	C1
2	D1
3	E1
4	D2
5	E2
6	F1
7	G1
8	F2
9	G2
10	J1
11	K1
12	L1
13	J2
14	M1
15	N1
16	K2
17	L2
18	M2
19	R1
20	R2
21	R3
22	P2
23	R4
24	P6
25	R6
26	N6
27	P11
28	R8
29	P3
30	P4
31	P8
32	P9
33	P10
34	R9
35	R10
36	R11
37	N11
38	M11
39	L11
40	M10
41	L10
42	K11
43	J11
44	K10

Boundary Scan Exit Order (x36) (continued)

Bit #	165-Ball ID
45	J10
46	H11
47	G11
48	F11
49	E11
50	D10
51	D11
52	C11
53	G10
54	F10
55	E10
56	A10
57	B10
58	A9
59	B9
60	A8
61	B8
62	A7
63	B7
64	B6
65	A6
66	B5
67	A5
68	A4
69	B4
70	B3
71	A3
72	A2
73	B2

Boundary Scan Exit Order (x72)

Bit #	209-Ball ID
1	A1
2	A2
3	B1
4	B2
5	C1
6	C2
7	D1
8	D2
9	E1
10	E2
11	F1
12	F2

Boundary Scan Exit Order (x72) (continued)

Bit #	209-Ball ID
13	G1
14	G2
15	H1
16	H2
17	J1
18	J2
19	L1
20	L2
21	M1
22	M2
23	N1
24	N2
25	P1
26	P2
27	R2
28	R1
29	T1
30	T2
31	U1
32	U2
33	V1
34	V2
35	W1
36	W2
37	T6
38	V3
39	V4
40	U4
41	W5
42	V6
43	W6
44	U3
45	U9
46	V5
47	U5
48	U6
49	W7
50	V7
51	U7
52	V8
53	V9
54	W11
55	W10
56	V11

Boundary Scan Exit Order (x72) (continued)

Bit #	209-Ball ID
57	V10
58	U11
59	U10
60	T11
61	T10
62	R11
63	R10
64	P11
65	P10
66	N11
67	N10
68	M11
69	M10
70	L11
71	L10
72	P6
73	J11
74	J10
75	H11
76	H10
77	G11
78	G10
79	F11
80	F10
81	E10
82	E11
83	D11
84	D10
85	C11
86	C10
87	B11
88	B10
89	A11
90	A10
91	A9
92	U8
93	A7
94	A5
95	A6
96	D6
97	B6
98	D7
99	K3
100	A8

Boundary Scan Exit Order (x72) (continued)

Bit #	209-Ball ID
101	B4
102	B3
103	C3
104	C4
105	C8
106	C9
107	B9
108	B8
109	A4
110	C6
111	B7
112	A3

Boundary Scan Exit Order (x18)

Bit #	165-Ball ID
1	D2
2	E2
3	F2
4	G2
5	J1
6	K1
7	L1
8	M1
9	N1
10	R1
11	R2
12	R3
13	P2
14	R4
15	P6
16	R6
17	N6
18	P11
19	R8
20	P3
21	P4
22	P8
23	P9
24	P10
25	R9
26	R10
27	R11
28	M10
29	L10

Boundary Scan Exit Order (x18) (continued)

30	K10
31	J10
32	H11
33	G11
34	F11
35	E11
36	D11
37	C11
38	A11
39	A10
40	B10
41	A9
42	B9
43	A8
44	B8
45	A7
46	B7
47	B6
48	A6
49	B5
50	A4
51	B3
52	A3
53	A2
54	B2

Maximum Ratings

(Above which the useful life may be impaired. For user guidelines, not tested.)

Storage Temperature .....–65°C to +150°C

Ambient Temperature with Power Applied.....–55°C to +125°C

Supply Voltage on V_{DD} Relative to GND..... –0.5V to +4.6V

DC to Outputs in Tri-State ..... –0.5V to V_{DDQ} + 0.5V

DC Input Voltage.....–0.5V to V_{DD} + 0.5V

Current into Outputs (LOW)..... 20 mA

Static Discharge Voltage..... > 2001V (per MIL-STD-883, Method 3015)

Latch-up Current..... > 200 mA

Operating Range

Range	Ambient Temperature	V_{DD}	V_{DDQ}
Commercial	0°C to +70°C	3.3V – 5%/+10%	2.5V – 5% to V_{DD}
Industrial	-40°C to +85°C		

Electrical Characteristics Over the Operating Range[13, 14]

Parameter	Description	Test Conditions		Min.	Max.	Unit
V_{DD}	Power Supply Voltage			3.135	3.6	V
V_{DDQ}	I/O Supply Voltage	V_{DDQ} = 3.3V		3.135	V_{DD}	V
		V_{DDQ} = 2.5V		2.375	2.625	V
V_{OH}	Output HIGH Voltage	V_{DD} = Min., I_{OH} = –4.0 mA, V_{DDQ} = 3.3V		2.4		V
		V_{DD} = Min., I_{OH}= –1.0 mA, V_{DDQ} = 2.5V		2.0		V
V_{OL}	Output LOW Voltage	V_{DD} = Min., I_{OL}= 8.0 mA, V_{DDQ} = 3.3V			0.4	V
		V_{DD} = Min., I_{OL}= 1.0 mA, V_{DDQ} = 2.5V			0.4	V
V_{IH}	Input HIGH Voltage[13]	V_{DDQ} = 3.3V		2.0	V_{DD} + 0.3V	V
		V_{DDQ} = 2.5V		1.7	V_{DD} + 0.3V	V
V_{IL}	Input LOW Voltage[13]	V_{DDQ} = 3.3V		–0.3	0.8	V
		V_{DDQ} = 2.5V		–0.3	0.7	V
I_X	Input Load Current except ZZ and MODE	GND ≤ V_I ≤ V_{DDQ}		–5	5	µA
	Input Current of MODE	Input = V_{SS}		–5		µA
		Input = V_{DD}			30	µA
	Input Current of ZZ	Input = V_{SS}		–30		µA
		Input = V_{DD}			5	µA
I_{OZ}	Output Leakage Current	GND ≤ V_I ≤ V_{DDQ}, Output Disabled		–5	5	µA
I_{DD}	V_{DD} Operating Supply	V_{DD} = Max., I_{OUT} = 0 mA, f = f_{MAX} = $1/t_{CYC}$	4.0-ns cycle, 250 MHz		500	mA
			5.0-ns cycle, 200 MHz		500	mA
			6.0-ns cycle, 167 MHz		450	mA
I_{SB1}	Automatic CE Power-down Current—TTL Inputs	Max. V_{DD}, Device Deselected, V_{IN} ≥ V_{IH} or V_{IN} ≤ V_{IL}, f = f_{MAX} = $1/t_{CYC}$	4.0-ns cycle, 250 MHz		245	mA
			5.0-ns cycle, 200 MHz		245	mA
			6.0-ns cycle, 167 MHz		245	mA
I_{SB2}	Automatic CE Power-down Current—CMOS Inputs	Max. V_{DD}, Device Deselected, V_{IN} ≤ 0.3V or V_{IN} ≥ V_{DDQ} – 0.3V, f = 0	All speed grades		120	mA
I_{SB3}	Automatic CE Power-down Current—CMOS Inputs	Max. V_{DD}, Device Deselected, V_{IN} ≤ 0.3V or V_{IN} ≥ V_{DDQ} – 0.3V, f = f_{MAX} = $1/t_{CYC}$	4.0-ns cycle, 250 MHz		245	mA
			5.0-ns cycle, 200 MHz		245	mA
			6.0-ns cycle, 167 MHz		245	mA
I_{SB4}	Automatic CE Power-down Current—TTL Inputs	Max. V_{DD}, Device Deselected, V_{IN} ≥ V_{IH} or V_{IN} ≤ V_{IL}, f = 0	All speed grades		135	mA

Shaded areas contain advance information.

Notes:

13. Overshoot: V_{IH}(AC) < V_{DD} +1.5V (Pulse width less than t_{CYC}/2), undershoot: V_{IL}(AC)> –2V (Pulse width less than t_{CYC}/2).
14. $T_{Power\text{-}up}$: Assumes a linear ramp from 0V to V_{DD} (min.) within 200 ms. During this time V_{IH} < V_{DD} and V_{DDQ} < V_{DD}.

Capacitance[15]

Parameter	Description	Test Conditions	TQFP Max.	209-BGA Max.	165-fBGA Max.	Unit
$C_{ADDRESS}$	Address Input Capacitance	T_A = 25°C, f = 1 MHz, V_{DD} = 3.3V V_{DDQ} = 2.5V	6	6	6	pF
C_{DATA}	Data Input Capacitance		5	5	5	pF
C_{CTRL}	Control Input Capacitance		8	8	8	pF
C_{CLK}	Clock Input Capacitance		6	6	6	pF
$C_{I/O}$	Input/Output Capacitance		5	5	5	pF

Thermal Resistance[15]

Parameters	Description	Test Conditions	165 fBGA Package	209 BGA Package	TQFP Package	Unit
Θ_{JA}	Thermal Resistance (Junction to Ambient)	Test conditions follow standard test methods and procedures for measuring thermal impedance, per EIA / JESD51.	16.3	15.2	24.63	°C/W
Θ_{JC}	Thermal Resistance (Junction to Case)		2.1	1.7	2.28	°C/W

AC Test Loads and Waveforms

3.3V I/O Test Load

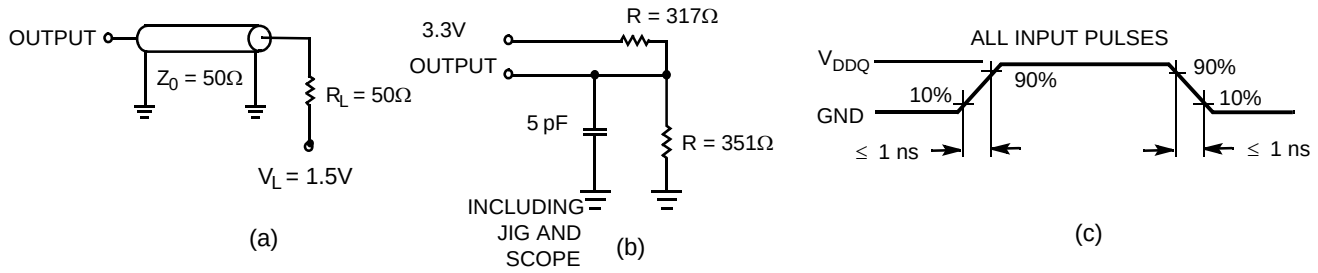

2.5V I/O Test Load

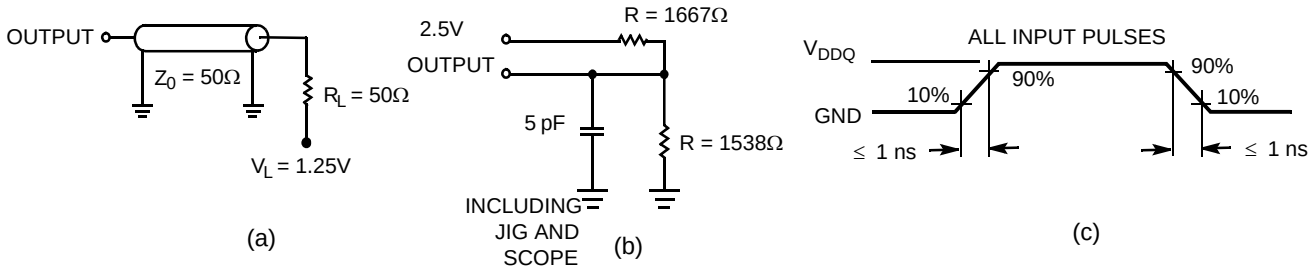

Note:
15. Tested initially and after any design or process changes that may affect these parameters.

Switching Characteristics Over the Operating Range [16, 17]

Parameter	Description	-250		-200		-167		Unit
		Min.	Max.	Min.	Max.	Min.	Max.	
t_{Power}[18]	V_{CC} (typical) to the First Access Read or Write	1		1		1		ms
Clock								
t_{CYC}	Clock Cycle Time	4.0		5.0		6.0		ns
F_{MAX}	Maximum Operating Frequency		250		200		167	MHz
t_{CH}	Clock HIGH	2.0		2.0		2.2		ns
t_{CL}	Clock LOW	2.0		2.0		2.2		ns
Output Times								
t_{CO}	Data Output Valid After CLK Rise		3.0		3.0		3.4	ns
t_{OEV}	$\overline{OE}$ LOW to Output Valid		3.0		3.0		3.4	ns
t_{DOH}	Data Output Hold After CLK Rise	1.3		1.3		1.5		ns
t_{CHZ}	Clock to High-Z[19, 20, 21]		3.0		3.0		3.4	ns
t_{CLZ}	Clock to Low-Z[19, 20, 21]	1.3		1.3		1.5		ns
t_{EOHZ}	$\overline{OE}$ HIGH to Output High-Z[19, 20, 21]		3.0		3.0		3.4	ns
t_{EOLZ}	$\overline{OE}$ LOW to Output Low-Z[19, 20, 21]	0		0		0		ns
Set-up Times								
t_{AS}	Address Set-up Before CLK Rise	1.4		1.4		1.5		ns
t_{DS}	Data Input Set-up Before CLK Rise	1.4		1.4		1.5		ns
t_{CENS}	$\overline{CEN}$ Set-up Before CLK Rise	1.4		1.4		1.5		ns
t_{WES}	$\overline{WE}$, $\overline{BW}_x$ Set-up Before CLK Rise	1.4		1.4		1.5		ns
t_{ALS}	ADV/$\overline{LD}$ Set-up Before CLK Rise	1.4		1.4		1.5		ns
t_{CES}	Chip Select Set-up	1.4		1.4		1.5		ns
Hold Times								
t_{AH}	Address Hold After CLK Rise	0.4		0.4		0.5		ns
t_{DH}	Data Input Hold After CLK Rise	0.4		0.4		0.5		ns
t_{CENH}	$\overline{CEN}$ Hold After CLK Rise	0.4		0.4		0.5		ns
t_{WEH}	$\overline{WE}$, $\overline{BW}_x$ Hold After CLK Rise	0.4		0.4		0.5		ns
t_{ALH}	ADV/$\overline{LD}$ Hold after CLK Rise	0.4		0.4		0.5		ns
t_{CEH}	Chip Select Hold After CLK Rise	0.4		0.4		0.5		ns

Shaded areas contain advance information.

Notes:

16. Timing reference is 1.5V when $V_{DDQ=}$3.3V and is 1.25V when $V_{DDQ=}$2.5V.
17. Test conditions shown in (a) of AC Test Loads unless otherwise noted.
18. This part has a voltage regulator internally; t_{power} is the time power needs to be supplied above V_{DD} minimum initially, before a Read or Write operation can be initiated.
19. t_{CHZ}, t_{CLZ}, t_{EOLZ}, and t_{EOHZ} are specified with AC test conditions shown in (b) of AC Test Loads. Transition is measured ± 200 mV from steady-state voltage.
20. At any given voltage and temperature, t_{EOHZ} is less than t_{EOLZ} and t_{CHZ} is less than t_{CLZ} to eliminate bus contention between SRAMs when sharing the same data bus. These specifications do not imply a bus contention condition, but reflect parameters guaranteed over worst case user conditions. Device is designed to achieve High-Z prior to Low-Z under the same system conditions.
21. This parameter is sampled and not 100% tested.

Switching Waveforms

Read/Write/Timing[22, 23, 24]

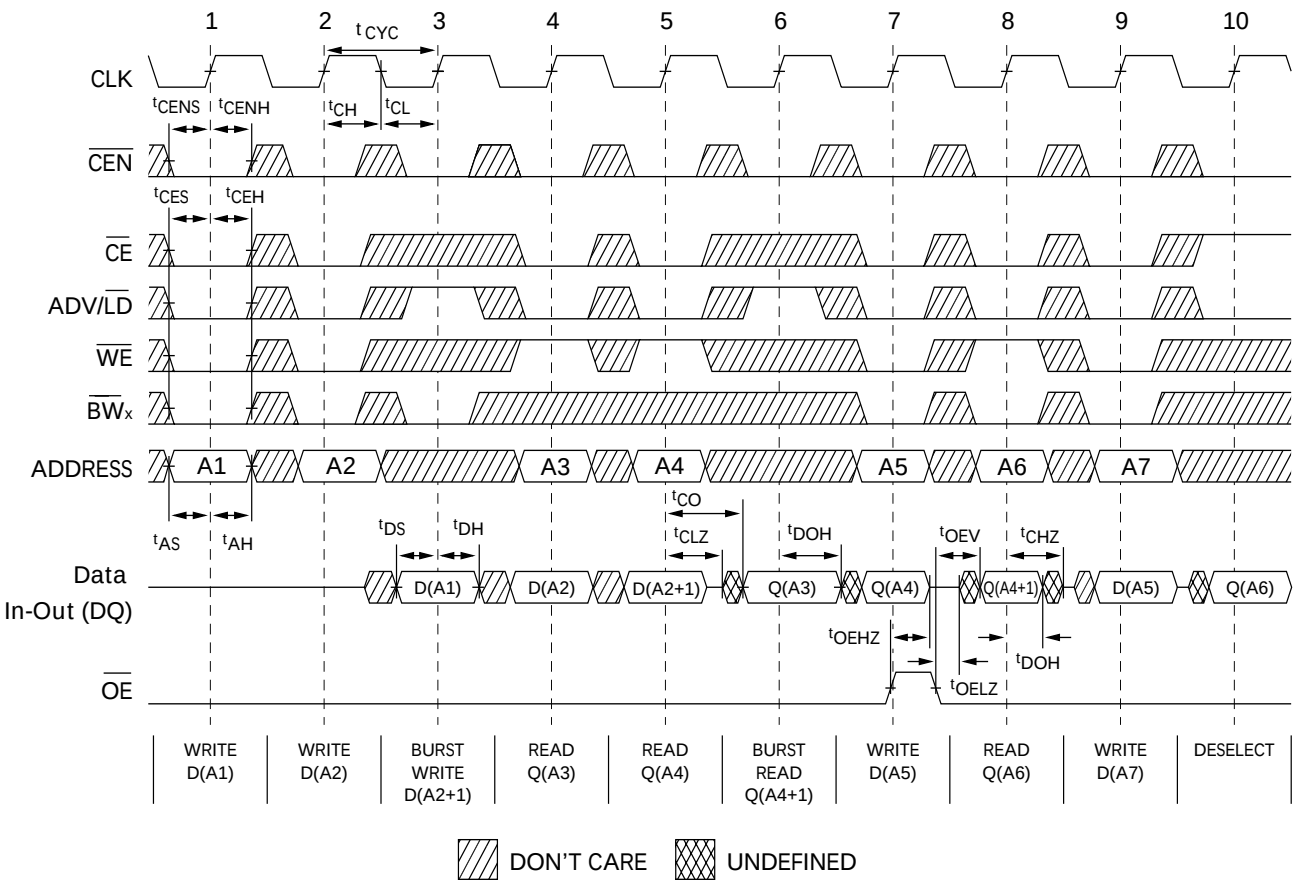

Notes:

22. For this waveform ZZ is tied LOW.
23. When $\overline{CE}$ is LOW, $\overline{CE}_1$ is LOW, CE_2 is HIGH and $\overline{CE}_3$ is LOW. When $\overline{CE}$ is HIGH, $\overline{CE}_1$ is HIGH or CE_2 is LOW or $\overline{CE}_3$ is HIGH.
24. Order of the Burst sequence is determined by the status of the MODE (0 = Linear, 1= Interleaved). Burst operations are optional.

Switching Waveforms (continued)

NOP, STALL and DESELECT Cycles[22, 23, 25]

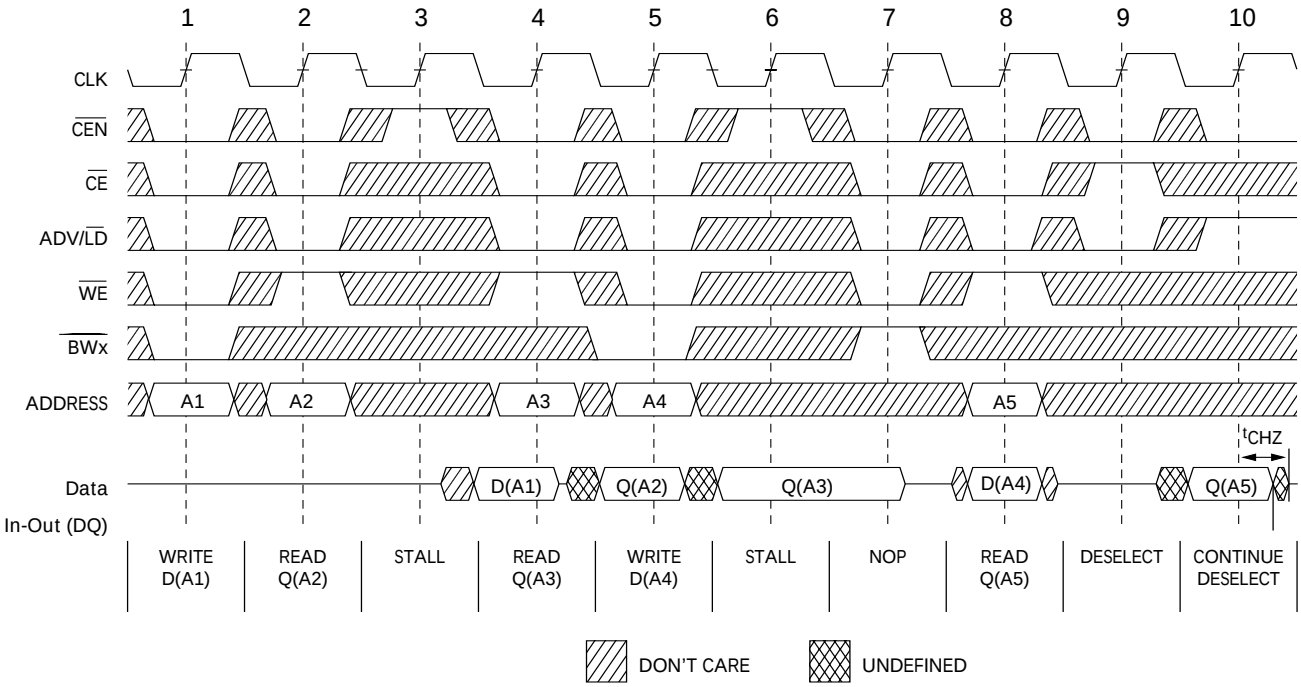

ZZ Mode Timing[26, 27]

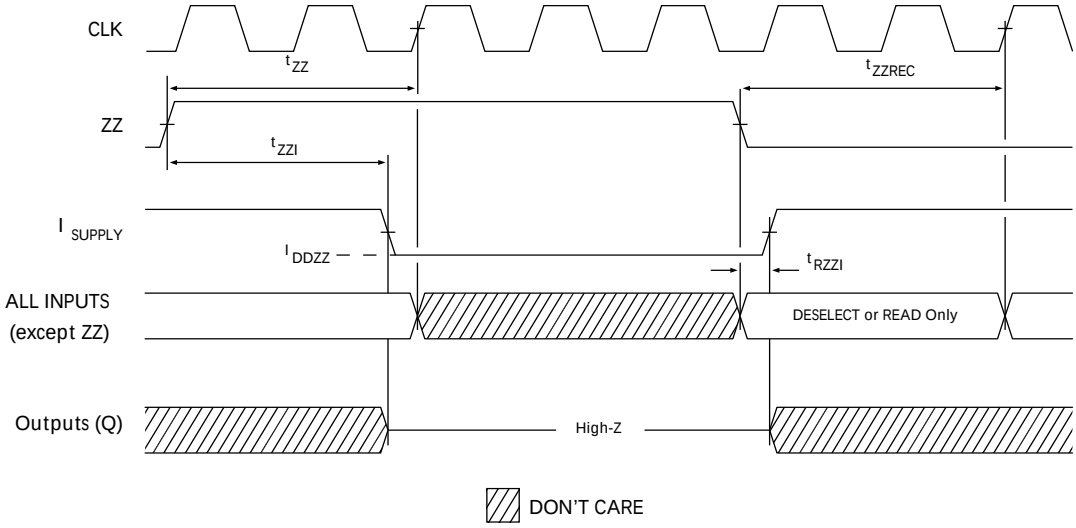

Notes:
25. The IGNORE CLOCK EDGE or STALL cycle (Clock 3) illustrated $\overline{CEN}$ being used to create a pause. A Write is not performed during this cycle
26. Device must be deselected when entering ZZ mode. See cycle description table for all possible signal conditions to deselect the device.
27. I/Os are in High-Z when exiting ZZ sleep mode.

Ordering Information

Speed (MHz)	Ordering Code	Package Name	Package Type	Operating Range
250	CY7C1470V33-250AXC	A101	Lead-Free 100-lead Thin Quad Flat Pack (14 x 20 x 1.4 mm)	Commercial
	CY7C1472V33-250AXC			
	CY7C1470V33-250BZC	BB165C	165-ball Fine Pitch Ball Grid Array (15 x 17 x 1.4 mm)	
	CY7C1472V33-250BZC			
	CY7C1474V33-250BGC	BB209A	209-ball Ball Grid Array (14 × 22 × 1.76 mm)	
	CY7C1470V33-250BZXC	BB165C	Lead-Free 165-ball Fine Pitch Ball Grid Array (15 x 17 x 1.4 mm)	
	CY7C1472V33-250BZXC			
	CY7C1474V33-250BGXC	BB209A	Lead-Free 209-ball Ball Grid Array (14 × 22 × 1.76 mm)	
200	CY7C1470V33-200AXC	A101	Lead-Free 100-lead Thin Quad Flat Pack (14 x 20 x 1.4 mm)	
	CY7C1472V33-200AXC			
	CY7C1470V33-200BZC	BB165C	165-ball Fine Pitch Ball Grid Array (15 x 17 x 1.4 mm)	
	CY7C1472V33-200BZC			
	CY7C1474V33-200BGC	BB209A	209-ball Ball Grid Array (14 × 22 × 1.76 mm)	
	CY7C1470V33-200BZXC	BB165C	Lead-Free 165-ball Fine Pitch Ball Grid Array (15 x 17 x 1.4 mm)	
	CY7C1472V33-200BZXC			
	CY7C1474V33-200BGXC	BB209A	Lead-Free 209-ball Ball Grid Array (14 × 22 × 1.76 mm)	
167	CY7C1470V33-167AXC	A101	Lead-Free 100-lead Thin Quad Flat Pack (14 x 20 x 1.4 mm)	
	CY7C1472V33-167AXC			
	CY7C1470V33-167BZC	BB165C	165-ball Fine Pitch Ball Grid Array (15 x 17 x 1.4 mm)	
	CY7C1472V33-167BZC			
	CY7C1474V33-167BGC	BB209A	209-ball Ball Grid Array (14 × 22 × 1.76 mm)	
	CY7C1470V33-167BZXC	BB165C	Lead-Free 165-ball Fine Pitch Ball Grid Array (15 x 17 x 1.4 mm)	
	CY7C1472V33-167BZXC			
	CY7C1474V33-167BGXC	BB209A	Lead-Free 209-ball Ball Grid Array (14 × 22 × 1.76 mm)	
167	CY7C1470V33-167AXI	A101	Lead-Free 100-lead Thin Quad Flat Pack (14 x 20 x 1.4 mm)	Industrial
	CY7C1472V33-167AXI			
	CY7C1470V33-167BZI	BB165C	165-ball Fine Pitch Ball Grid Array (15 x 17 x 1.4 mm)	
	CY7C1472V33-167BZI			
	CY7C1474V33-167BGI	BB209A	209-ball Ball Grid Array (14 × 22 × 1.76 mm)	
	CY7C1470V33-167BZXI	BB165C	Lead-Free 165-ball Fine Pitch Ball Grid Array (15 x 17 x 1.4 mm)	
	CY7C1472V33-167BZXI			
	CY7C1474V33-167BGXI	BB209A	Lead-Free 209-ball Ball Grid Array (14 × 22 × 1.76 mm)	

Shaded area contains advance information
Please contact your local Cypress sales representative for availability of these parts.
Lead-free BG packages (Ordering Code: BGX) will be available in 2005.

Package Diagrams

100-pin Thin Plastic Quad Flatpack (14 x 20 x 1.4 mm) A101

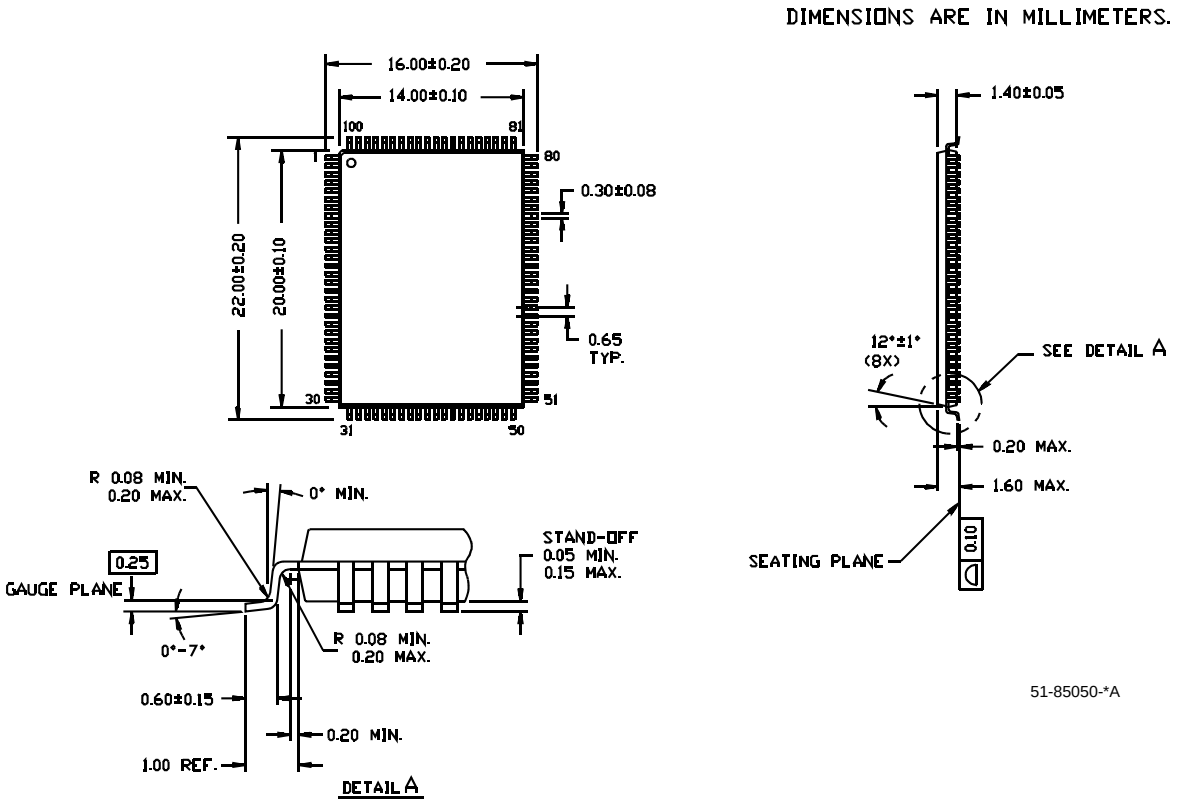

Package Diagrams (continued)

209-Ball FBGA (14 x 22 x 1.76 mm) BB209A

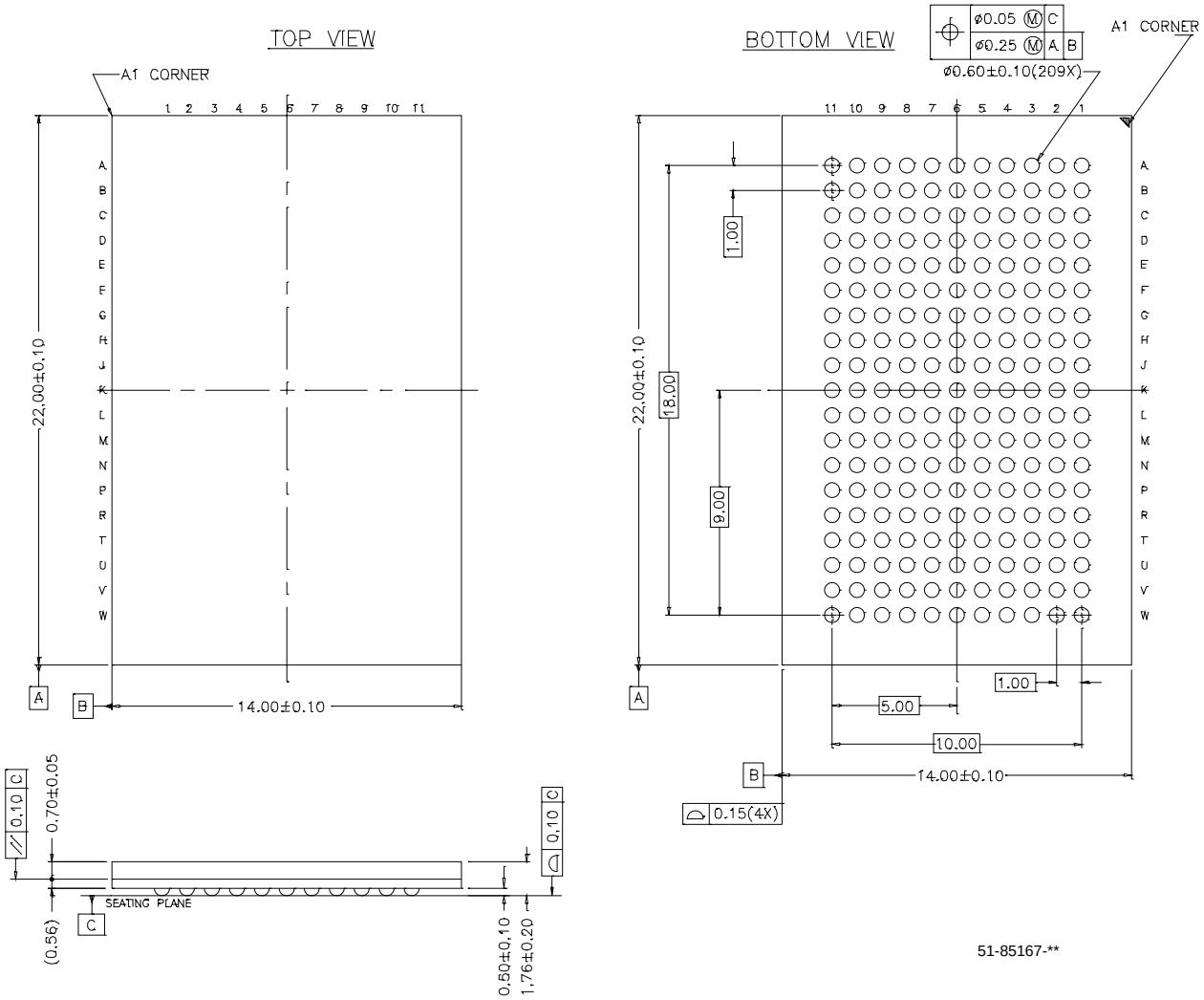

Package Diagrams (continued)

165-Ball FBGA (15 x 17 x 1.40 mm) BB165C

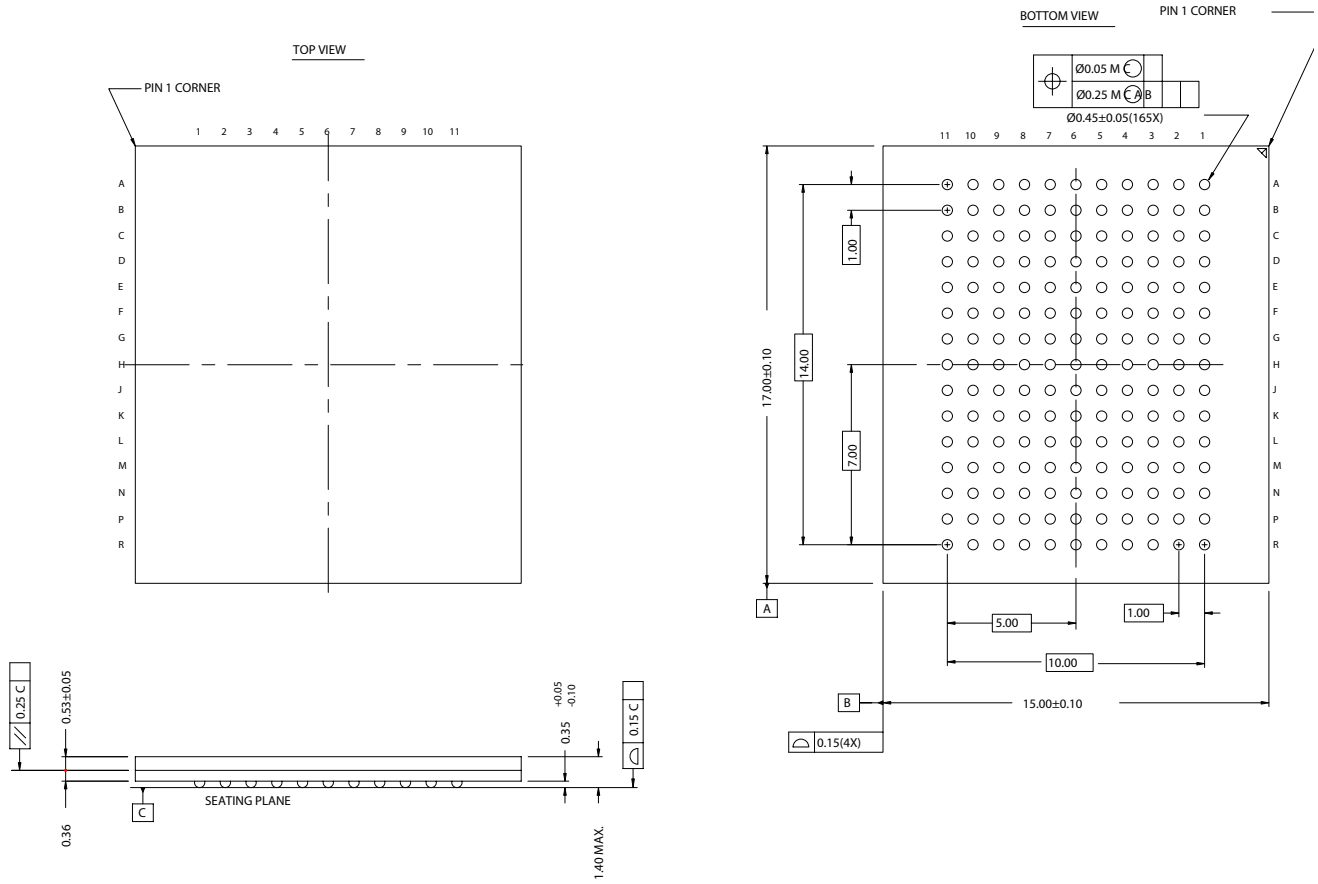

51-85165-*A

ZBT is a trademark of Integrated Device Technology. No Bus Latency and NoBL are trademarks of Cypress Semiconductor Corporation. All products and company names mentioned in this document may be the trademarks of their respective holders.

© Cypress Semiconductor Corporation, 2004. The information contained herein is subject to change without notice. Cypress Semiconductor Corporation assumes no responsibility for the use of any circuitry other than circuitry embodied in a Cypress Semiconductor product. Nor does it convey or imply any license under patent or other rights. Cypress Semiconductor does not authorize its products for use as critical components in life-support systems where a malfunction or failure may reasonably be expected to result in significant injury to the user. The inclusion of Cypress Semiconductor products in life-support systems application implies that the manufacturer assumes all risk of such use and in doing so indemnifies Cypress Semiconductor against all charges. Cypress products are not warranted nor intended to be used for medical, life-support, life-saving, critical control or safety applications, unless pursuant to an express written agreement with Cypress.

Document History Page

Document Title: CY7C1470V33/CY7C1472V33/CY7C1474V33 72-Mbit (2M x 36/4M x 18/1M x 72) Pipelined SRAM with NoBL™ Architecture Document Number: 38-05289				
REV.	**ECN No.**	**Issue Date**	**Orig. of Change**	**Description of Change**
**	114676	08/06/02	PKS	New Data Sheet
*A	121520	01/27/03	CJM	Updated features for package offering Removed 300-MHz offering Changed tCO, tEOV, tCHZ, tEOHZ from 2.4 ns to 2.6 ns (250 MHz), tDOH, tCLZ from 0.8 ns to 1.0 ns (250 MHz), tDOH, tCLZ from 1.0 ns to 1.3 ns (200 MHz) Updated ordering information Changed Advanced Information to Preliminary
*B	223721	See ECN	NJY	Changed timing diagrams Changed logic block diagrams Modified Functional Description Modified “Functional Overview” section Added boundary scan order for all packages Included thermal numbers and capacitance values for all packages Included IDD and ISB values Removed 250-MHz offering and included 225-MHz speed bin Changed package outline for 165FBGA package and 209-ball BGA package Removed 119-BGA package offering
*C	235012	See ECN	RYQ	Minor Change: The data sheets do not match on the spec system and external web.
*D	243572	See ECN	NJY	Changed ball C11,D11,E11,F11,G11 from DQPb,DQb,DQb,DQb,DQb to DQPa,DQa,DQa,DQa,DQa in page 4 Modified capacitance values in page 20
*E	299511	See ECN	SYT VBL	Removed 225-MHz offering and included 250-MHz speed bin Changed t_{CYC} from 4.4 ns to 4.0 ns for 250-MHz Speed Bin Changed Θ_{JA} from 16.8 to 24.63 °C/W and Θ_{JC} from 3.3 to 2.28 °C/W for 100 TQFP Package on Page # 20 Added lead-free information for 100-Pin TQFP and 165 FBGA Packages Added comment of ‘Lead-free BG packages availability’ below the Ordering Information Add Industrial part numbers in Ordering Info section.