THIS DRAWING IS UNPUBLISHED. RELEASED FOR PUBLICATION -,- .
© COPYRIGHT - By - ALL RIGHTS RESERVED.

LOC	DIST
G	14

REVISIONS

P	LTR	DESCRIPTION	DATE	DWN	APVD
	J1	REVISED PER ECO-11-004820	11MAR11	RK	HMR

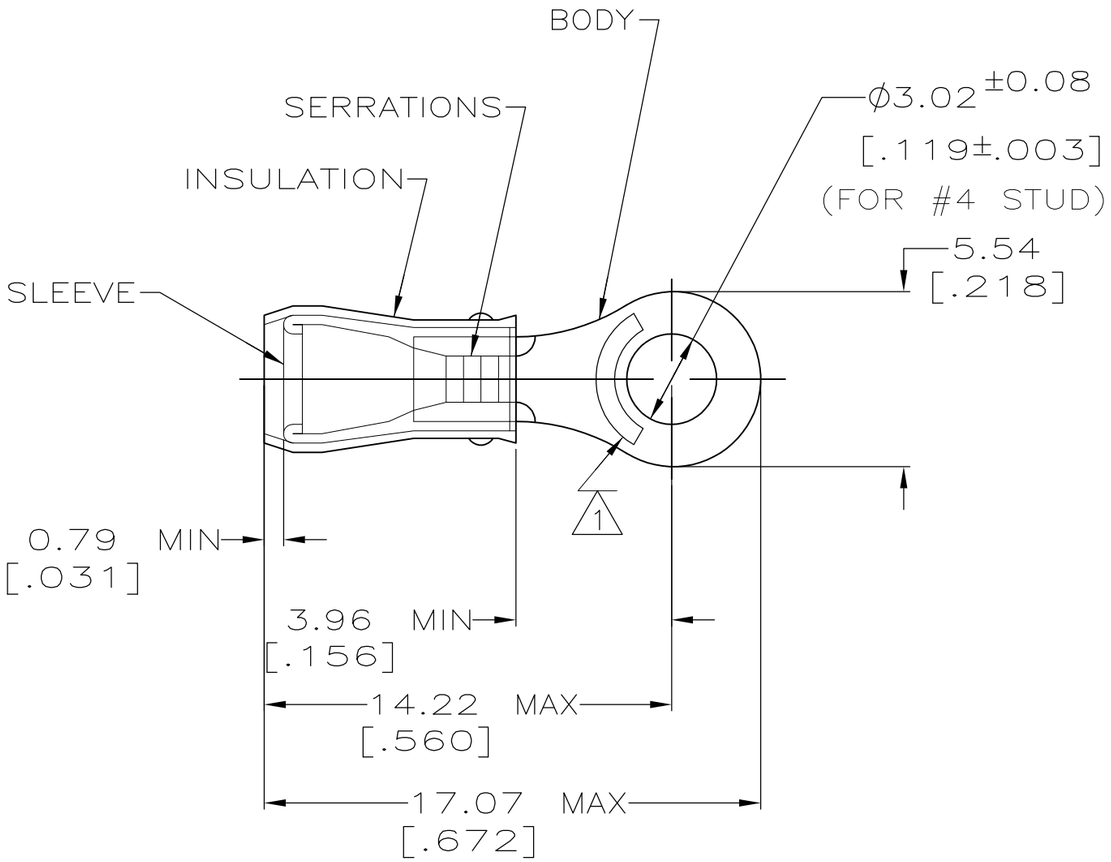

AMP WIRE RANGE	E13288	LR7189 Certified
22-16 AWG SOLID OR STRANDED	22-16 AWG SOLID OR STRANDED	22-16 AWG SOLID OR STRANDED

1. STAMP AMP 22-18* APPROX AS SHOWN 22-16 TERMINALS ARE STAMPED 22-18 IN ACCORDANCE WITH MILITARY SPEC MIL-T-7928 COMMERCIAL WIRE RANGE IS 22-16

2. WIRE INSUL DIA, 2.03-3.18 [.080-.125]

3. TONGUE MATERIAL THK, 0.79±0.05 [.031±.002]

MILITARY P/N & CLASS	QTY	PACKAGE TYPE	PART NO
	---	-------	------
	100	LOOSE PIECE, BOX	8-320553-1
MS25036-148 CLASS 2	5000	ON TAPE, REEL	2-320553-2
MS25036-148 CLASS 1&2	1000	LOOSE PIECE	320553

AMP INCORPORATED
CUSTOMER SERVICE SYSTEM

FOR ADDITIONAL PRODUCT INFORMATION OR COPIES OF DRAWINGS AND TECHNICAL DOCUMENTS	PRODUCT INFORMATION CENTER 1-800-522-6752
FOR APPLICATION TOOLING INFORMATION	TOOLING ASSISTANCE CENTER 1-800-722-1111
FOR ORDER ENTRY	1-800-526-5142

MAX RECOMMENDED OPERATING TEMPERATURE: 105°C [221 F]

VOLTAGE RATING: 300 V MAX

CIRCULAR MIL AREA: 0.26mm² - 1.65mm² [509-3260]

THIS DRAWING IS A CONTROLLED DOCUMENT.

DIMENSIONS: mm [INCHES]

TOLERANCES UNLESS OTHERWISE SPECIFIED:
0 PLC ± -
1 PLC ± -
2 PLC ± 0.20[.008]
3 PLC ± -
4 PLC ± -
ANGLES ± -

MATERIAL: BODY,SLV,COPPER PER ASTM B 152; INSUL,NYLON,COLOR,RED

FINISH: BODY & SLV,TIN PLATE PER MIL-T-10727

DWN	M ELLIS	24MAY95
CHK	C PRESNELL	24MAY95
APVD	N BIRCH	24MAY95
PRODUCT SPEC	MIL-T-7928 & UL 486A	
APPLICATION SPEC	—	
WEIGHT	—	

TE Connectivity

NAME: TERMINAL, RING TONGUE, PIDG TM

SIZE	CAGE CODE	DRAWING NO	RESTRICTED TO
A3	00779	C-320553	—

CUSTOMER DRAWING | SCALE 4:1 | SHEET 1 OF 1 | REV J1

1470-19 (3/11)