MATERIAL NO.	ENGINEERING NO.	MADE FROM
848547021	84854-7021	1' 8" +1.75"-0 (.5M +45mm-0)
848547022	84854-7022	3' 3" +2.19"-0 (1.0M +56mm-0)
848547023	84854-7023	6' 7" +3.50"-0 (2.0M +89mm-0)
848547024	84854-7024	9' 10" +3.50"-0 (3.0M +89mm-0)
848547025	84854-7025	13' 1" +6.50"-0 (4.0M +165mm-0)
848547026	84854-7026	16' 5" +6.50"-0 (5.0M +165mm-0)
848547027	84854-7027	19' 8" +6.50"-0 (6.0M +165mm-0)

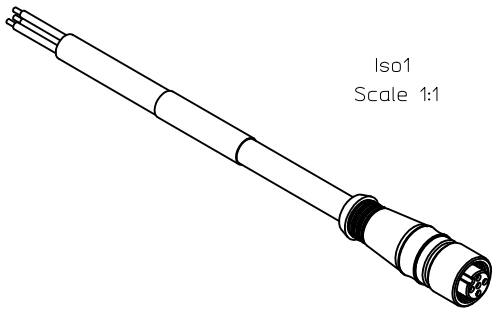

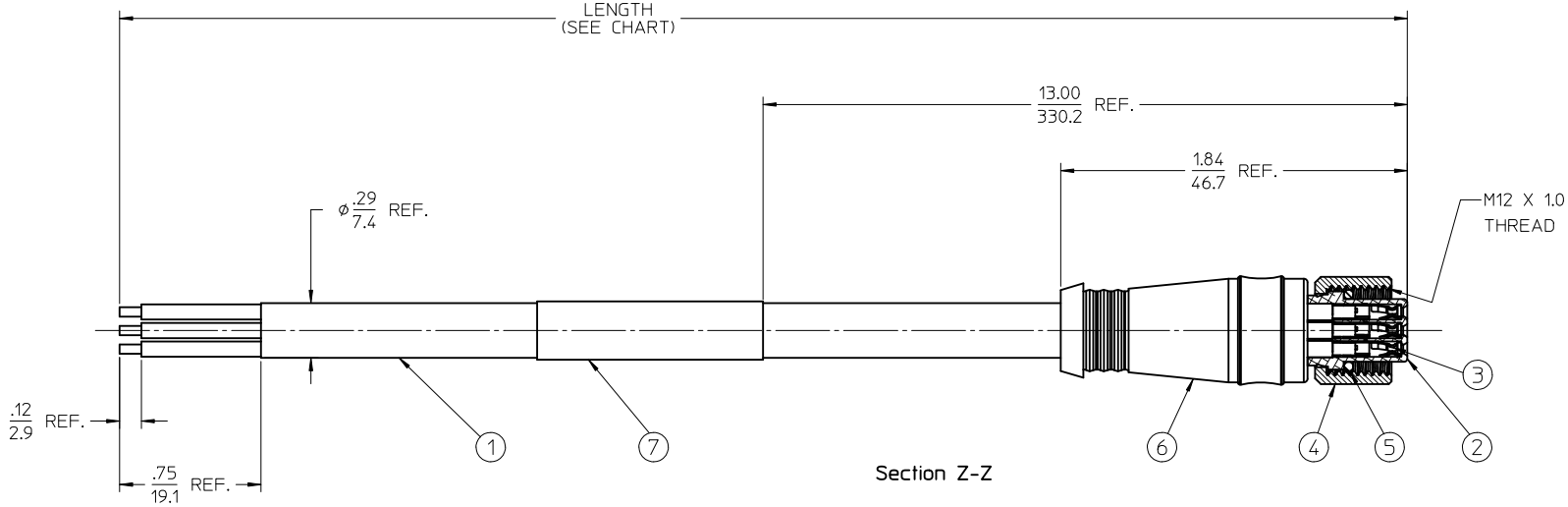

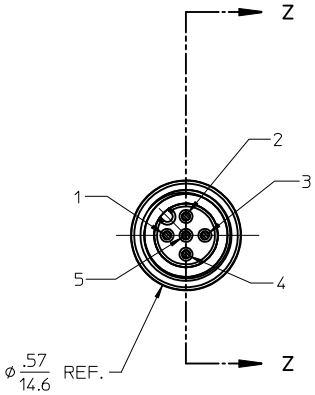

NOTES:
1. MATERIAL: SEE TABLE
2. FINISHES: SEE TABLE
3. PACKAGING: SEALED POLY BAGS WITH BAR-CODE LABEL
4. MATES WITH: MIC 5 POLE DEV-NET RECEPTACLE
5. ELECTRICAL SPECIFICATIONS:
   CURRENT RATING: 4.0 AMPS MAX
6. PART IS RoHS COMPLIANT

P1

1	DRAIN
2	RED +V
3	BLACK -V
4	WHITE CAN H
5	BLUE CAN L

WIRING DIAGRAM

ITEM	QTY.	DESCRIPTION	MATERIAL	FINISH
7	1	LABEL	PLASTIC FILM	YELLOW/BLACK
6	1	OVERMOLD	PVC	GRAY
5	1	O-RING	VITON	RED
4	1	COUPLING NUT	BRASS	NICKEL PLATED
3	5	CONTACT SOCKET	Cu ALLOY	GOLD PLATED
2	1	INSERT, 5 POLE	NYLON	BLACK
1	1	CABLE, 2 PR, SHIELDED, DEV-NET, THIN	PVC JACKET	GRAY

RELEASED
EC NO: WNA2010-0402 2010/01/05
DRWN:RSTONE 2010/01/07
CH'KD:B.WOODMAN 2010/01/07
APPR: JFMURPHY 2010/01/07
DESCRIPTION
REV
A

QUALITY SYMBOLS
▼=0
▽C=0

GENERAL TOLERANCES (UNLESS SPECIFIED)

	mm	INCH
4 PLACES	± ---	± ---
3 PLACES	± ---	± .005
2 PLACES	± 0.13	± .01
1 PLACE	± 0.3	±
ANGULAR ± 1 °		

DRAFT WHERE APPLICABLE MUST REMAIN WITHIN DIMENSIONS

DIMENSION STYLE: IN/MM
SCALE: 2:1
DESIGN UNITS: INCH
THIRD ANGLE PROJECTION

DRAWN BY: R.STONE DATE: 2009/12/28
CHECKED BY: B.WOODMAN DATE: 2010/01/04
APPROVED BY: J.MURPHY DATE: 2010/01/06

TITLE: MIC CABLE ASSEMBLY FEMALE, 5 POLE DEV-NET DROP

molex MOLEX INCORPORATED

MATERIAL NO.: SEE CHART
DOCUMENT NO.: SD-84854-022
SHEET NO.: 1 OF 1
SIZE: C

THIS DRAWING CONTAINS INFORMATION THAT IS PROPRIETARY TO MOLEX INCORPORATED AND SHOULD NOT BE USED WITHOUT WRITTEN PERMISSION