311 - 7996 - 9038

OMRON

Pushbutton Switch / Indicator

A16 / M16

Mounting Aperture of 16 mm

- Modular construction
  (Pushbutton + Case + Lamp + Switch Unit)
- Wide Variety of Control and Signal Devices: Lighted, Non-Lighted, and Buzzer
  (Refer to page 47.)
- UL and CSA approved, VDE (pending)
- Conforms to EN60943-5-1, IEC947-5-1
- Quick and easy assembly, snap-in Switch Unit.
- Wide range of switching capacity from general to microload
- High reliability, IP65
- Short mounting depth, less than 28.5 mm below panel

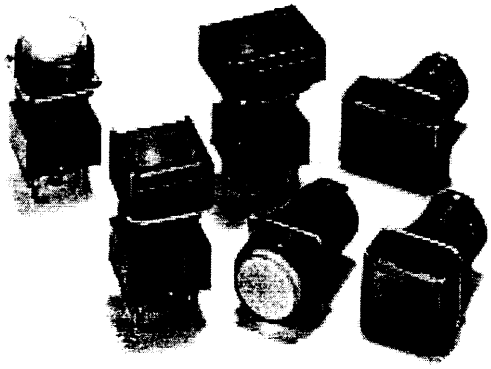

CE RcR

Ordering Information

Construction

Flange Shape

Rectangular	Square	Round
(A16□-J)	(A16□-A)	(A16□-T)

Available Colors

- For LED/incandescent
  Red, green, yellow, white, blue
- For neon
  Red, green
- For non-lighted
  Red, green, yellow, white, blue, black

Protective Structure and Terminal Type

- **Protective Structure**
  IP40/Oil-resistant IP65
- **Terminal Type**
  Solder terminals
  (tab terminals #110)

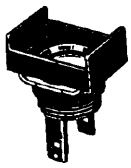

Lamp

- LED
- Incandescent lamp
- Neon lamp

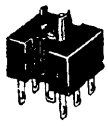

Switch Unit Specifications

- **Ratings**
  125 VAC: 5 A
  250 VAC: 3 A
  30 VDC 3 A
  Minimum applicable load: 1 mA at 5 VDC

Structure of Pushbutton

Lens

Legend plate

Dispersion plate

Reflective plunger

■ Model Number Legend

1. Pushbutton

Non-lighted/Lighted

A16□L-□□
1 2 3

1. **Degree of Protection**
   None: IP40
   5: IP65
2. **Flange Shape**
   J: Rectangular
   T: Round
   A: Square
3. **Illumination Color for non-lighted**
   R: Red
   G: Green
   Y: Yellow
   W: White
   A: Blue
   B: Black

   Illumination Color for lighted
   LED/Incandescent Lamp
   R: Red
   Y: Yellow
   W: White
   A: Blue
   LED
   GY: Green
   Incandescent Lamp
   G: Green
   Neon Lamp
   RN: Red
   GN: Green

2. Lamp

A16-□□
1 2

1. **Operating Voltage (Rated Voltage)**
   Incandescent Lamp
   5: 5 VAC/DC (6 VAC/DC)
   12: 12 VAC/DC (14 VAC/DC)
   24: 24 VAC/DC (28 VAC/DC)
   LED
   5D: 5 VDC (5 VDC)
   12D: 12 VDC (12 VDC)
   24D: 24 VDC (24 VDC)
   Neon Lamp
   1N: 100 VAC 110 VAC)
   2N: 200 VAC (220 VAC)
2. **Illumination Color**
   None: Incandescent Lamp
   R: Red (LED)
   G: Green (LED)
   Y: Yellow (LED)
   W: White (LED)
   A: Blue (LED)
   RN: Red (Neon Lamp)
   GN: Green (Neon Lamp)

3. Case (Common Use)

A16□-□□
1 2 3

1. **Degree of Protection**
   None: IP40
   5: IP65
2. **Flange Shape**
   CJ: Rectangular
   CT: Round
   CA: Square
3. **Switch Action**
   M: Momentary
   A: Alternate

4. Switch Unit (Solder Terminals)

A16-□-□
1 2

1. **Contacts**
   1: SPDT
   2: DPDT

2. **Transformer Circuit (Operating Voltage/Rated Voltage)**
   None: Without transformer
   T1: 100 VAC/110 VAC (Release: September 1999)
   T2: 200 VAC/220 VAC (Release: September 1999)

5. Indicator Socket (Solder Terminals Only)

M16-O-□
1

1. **Transformer Circuit (Operating Voltage/Rated Voltage)**
   None: Without transformer
   T1: 100 VAC/110 VAC (Release: September 1999)
   T2: 200 VAC/220 VAC (Release: September 1999)

■ Pushbutton Units

Illumination: red, yellow, and white use either LED or incandescent lamps.

LED

Degree of protection / Color of functional unit	IP40			Oil-resistant IP65		
	Rectangular	Square	Round	Rectangular	Square	Round
Red	A16L-JR	A16L-AR	A16L-TR	A165L-JR	A165L-AR	A165L-TR
Yellow	A16L-JY	A16L-AY	A16L-TY	A165L-JY	A165L-AY	A165L-TY
Green	A16L-JGY	A16L-AGY	A16L-TGY	A165L-TGY	A165L-AGY	A165L-TGY
White	A16L-JW	A16L-AW	A16L-TW	A165L-TW	A165L-AW	A165L-TW

Incandescent Lamps

Degree of protection / Color of functional unit	IP40			Oil-resistant IP65		
	Rectangular	Square	Round	Rectangular	Square	Round
Red	A16L-JR	A16L-AR	A16L-TR	A165L-JR	A165L-AR	A165L-TR
Yellow	A16L-JY	A16L-AY	A16L-TY	A165L-JY	A165L-AY	A165L-TY
Green	A16L-JG	A16L-AG	A16L-TG	A165L-JG	A165L-AG	A165L-TG
White	A16L-JW	A16L-AW	A16L-TW	A165L-JW	A165L-AW	A165L-TW
Blue	A16L-JA	A16L-AA	A16L-TA	A165L-JA	A165L-AA	A165L-TA

Neon Lamps

Degree of protection	IP40			Oil-resistant IP65		
Red	A16L-JRN	A16L-ARN	A16L-TRN	A165L-JRN	A165L-ARN	A165L-TRN
Green	A16L-JGN	A16L-AGN	A16L-TGN	A165L-JGN	A165L-AGN	A165L-TGN

■ Switch Units

Shape	Classification				Model
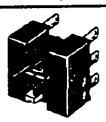	Lighted/non-lighted (common use)	Socket (without transformer circuit)	SPDT	Solder terminal	A16-1
			DPDT		A16-2

Non-lighted

Degree of protection / Color of functional unit	IP40			Oil-resistant IP65		
	Rectangular	Square	Round	Rectangular	Square	Round
Red	A16L-JR	A16L-AR	A16L-TR	A165L-JR	A165L-AR	A165L-TR
Yellow	A16L-JY	A16L-AY	A16L-TY	A165L-JY	A165L-AY	A165L-TY
Green	A16L-JG	A16L-AG	A16L-TG	A165L-JG	A165L-AG	A165L-TG
White	A16L-JW	A16L-AW	A16L-TW	A165L-JW	A165L-AW	A165L-TW
Blue	A16L-JA	A16L-AA	A16L-TA	A165L-JA	A165L-AA	A165L-TA
Black	A16L-JB	A16L-AB	A16L-TB	A165L-JB	A165L-AB	A165L-TB

■ Lamps

LED

Rated voltage / LED light	5 VDC	12 VDC	24 VDC
Red	A16-5DR	A16-12DR	A16-24DR
Yellow	A16-5DY	A16-12DY	A16-24DY
Green	A16-5DG	A16-12DG	A16-24DG
White	A16-5DW	A16-12DW	A16-24DW
Blue	A16-5DA	A16-12DA	A16-24DA

Incandescent Lamp

Rated voltage	6 V	14 V	28 V
Model	A16-5	A16-12	A16-24

Neon Lamp

Rated voltage / LED light	Functional unit color	110 V	220 V
Red	White and orange	A16-1NRN	A16-2NRN
Green	Green	A16-1NGN	A16-2NGN

■ Cases

Shape	Classification			Model
	IP40	Momentary operation	Rectangular	A16-CJM
			Square	A16-CAM
			Round	A16-CTM
		Alternating operation	Rectangular	A16-CJA
			Square	A16-CAA
			Round	A16-CTA
	Oil-resistant IP65	Momentary operation	Rectangular	A165-CJM
			Square	A165-CAM
			Round	A165-CTM
		Alternating operation	Rectangular	A165-CJA
			Square	A165-CAA
			Round	A165-CTA

Accessories (Order Separately)

■ Accessories

Name	Shape	Classification	Model	Remarks
Switch Guards		Rectangular	A3BJ-5050	Cannot be used with the Dust Cover.
		Square and round	A3BA-5050	
Dust Covers		Rectangular	A3BJ-5060	Cannot be used with the Switch Cover.
		Square	A3BA-5060	
		Round	A3BT-5060	
Panel Plugs		Rectangular	A3BJ-3003	Used for covering the panel cutouts for future panel expansion.
		Square	A3BA-3003	
		Round	A3BT-3003	

■ Replacements

Name	Shape	Classification			Model	Remarks
Legend Panels		Rectangular	IP40	Milky	A3BJ-5204	A single Legend Panel (transparent) is included with a standard model. The milky Legend Panel can be used with the IP40 and oil-resistant IP65.
				Transparent	A3BJ-5202	
			Oil-resistant IP65	Milky	A3BJ-5204	
				Transparent	A3BJ-5203	
		Square	IP40	Milky	A3BA-5204	
				Transparent	A3BA-5202	
			Oil-resistant IP65	Milky	A3BA-5204	
				Transparent	A3BA-5203	
		Round	IP40	Milky	A3BT-5204	
				Transparent	A3BT-5202	
			Oil-resistant IP65	Milky	A3BT-5204	
				Transparent	A3BT-5203	
Color Caps (for IP40)	Rectangular	LED indicator/incandescent lamp/non-lighted		White	A3B□-5001W	Insert one of the following letters into the box (□). J: Rectangular A: Square T: Round The Color Cap is usually supplied. Replace the Cap if the color is to be changed. When using an LED indicator, be sure to use a Color Cap that matches the luminescent color of the LED. The materials used for the IP40 and oil-resistant IP65 are different so be sure to use a Color Cap that matches the specifications of the Switch.
				Red	A3B□-5001R	
				Yellow	A3B□-5001Y	
		LED indicator		Green	A3B□-5001GY	
		Incandescent lamp/ non-lighted		Blue	A3B□-5001A	
				Green	A3B□-5001G	
	Square	Non-lighted		Black	A3B□-5011B	
Color Caps (for oil-resistant IP65)		LED indicator/incandescent lamp/non-lighted		White	A3B□-5101W	
				Red	A3B□-5101R	
				Yellow	A3B□-5101Y	
	Round	LED indicator		Green	A3B□-5101GY	
		Incandescent lamp/ non-lighted		Blue	A3B□-5101A	
				Green	A3B□-5101G	
		Non-lighted		Black	A3B□-5111B	

■ Tools

Name	Shape	Model	Applicable types					Remarks
			Pushbutton Switch	Knob-type Selector Switch	Key-type Selector Switch	Emergency Stop Switch	Indicator	
Extractor		A3PJ-5080	Yes	No	No	No	Yes	Convenient for extracting Pushbutton Switches
Screw Fitting		A3B-3004	Yes	Yes	Yes	Yes	Yes	Convenient for ganged installation. Tighten to a torque of 0.39 N • m (5 kgf • cm) min.
Extractor	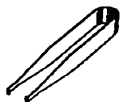	A16Z-5080	Yes	Yes	Yes	Yes	Yes	Convenient for extracting the Switch Unit and Lamps.

Specifications

■ Approved Standards

Recognized Organization	Standards	File No.
UL, cUL (see note)	UL508	E41515
ASTA	EN60947-5-1	---

Note: UL: CSA C22 No. 14

■ Ratings

AC resistive load (AC15)	DC resistive load (DC13)
3 A, 250 VAC 5 A, 125 VAC	3 A, 30 VDC

Minimum applicable load: 1 mA at 5 VDC
Rated values are obtained from tests conducted under the following conditions according to JIS C4505 and C4520.

1. Load: Resistive load
2. Mounting conditions: No vibration and no shock
3. Temperature: 20°±2°C
4. Operating frequency: 20 operations/min

Contact

Name	Contact
DPDT	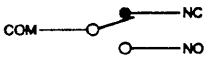

LED

Rated voltage	Rated current	Operating voltage	Internal limiting resistor
5 VDC	30 mA	5 VDC±5%	33 Ω
12 VDC	15 mA	12 VDC±5%	270 Ω
24 VDC	10 mA	24 VDC±5%	1600 Ω

Incandescent Lamp

Rated voltage	Rated current	Operating voltage
6 VAC/DC	60 mA	5 VAC/DC
14 VAC/DC	40 mA	12 VAC/DC
28 VAC/DC	24 mA	24 VAC/DC

■ Characteristics

Item		Pushbutton Switch
Allowable operating frequency	Mechanical	Momentary operation: 120 operations/min max. Alternating operation: 60 operations/min max. (see note 1)
	Electrical	20 operations/min max.
Insulation resistance		100 MΩ min. (at 500 VDC)
Dielectric strength		1,000 VAC, 50/60 Hz for 1 min between terminals of same polarity 2,000 VAC, 50/60 Hz for 1 min between terminals of different polarity and also between each terminal and ground 1,000 VAC, 50/60 Hz for 1 min between lamp terminals (see note 2)
Vibration resistance	Malfunction	10 to 55 Hz, 1.5-mm double amplitude (malfunction within 1 ms)
Shock resistance	Mechanical	500 m/s^2 (50G)
	Malfunction	150 m/s^2 (15G) max. (malfunction within 1 ms)
Life expectancy	Mechanical	Momentary operation: 2,000,000 operations min. Alternating operation: 200,000 operations min.
	Electrical	100,000 operations min.
Ambient temperature		Operating: –10°C to 55°C (with no icing or condensation) Storage: –25°C to 65°C (with no icing or condensation)
Ambient humidity		Operating: 35% to 85%
Electric shock protection class		Class II
PTI (tracking characteristic)		175
Degree of contamination		3 (IEC947-5-1)
Weight		Approx. 10 g (in the case of a lighted DPDT switch with solder terminals)

Note: 1. Set and reset constitute one operation.
2. With LED and incandescent lamp not mounted.

■ Operating Characteristics

Type / Features	Pushbutton Switch			
	IP40		Oil-resistant IP65	
	SPDT	DPDT	SPDT	DPDT
Operating force (OF) max.	2.45 N (250 gf)	4.41 N (450 gf)	2.94 N (300 gf)	4.91 N (500 gf)
Releasing force (RF) min.	0.29 N (30 gf)			
Total travel (TT)	Approx. 3 mm			
Pretravel (PT) max.	2.5 mm			
Lock stroke (LTA) min. (see note)	0.5 mm			

Note: Lock stroke is only for alternating operation.

Dimensions

Note: All units are in millimeters unless otherwise indicated.

■ Lighted/Non-lighted Pushbutton Switches without Transformer

The lamp terminal is also provided with non-lighted models.

Solder terminals and tab terminals (#110) can be both used with Lighted and Non-lighted Pushbutton Switches.

Rectangular
A16□-J

Solder terminals (tab terminals #110)

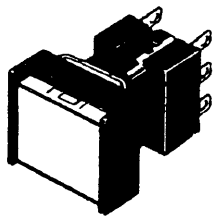

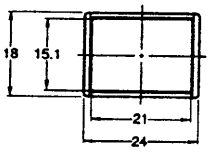

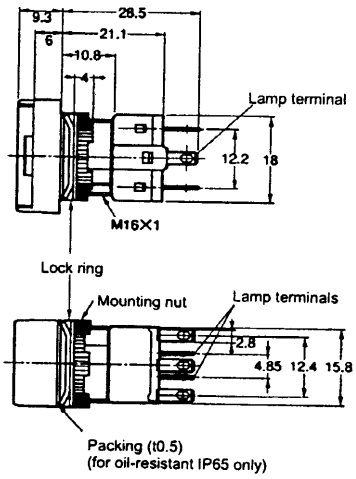

Panel Cutouts

See page 14 for panel cutouts

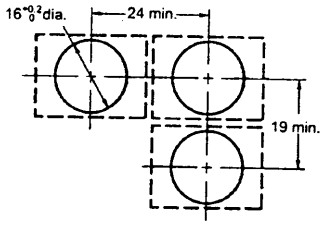

Square
A16□-A

Solder terminals (tab terminals #110)

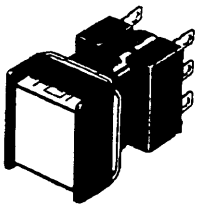

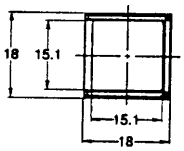

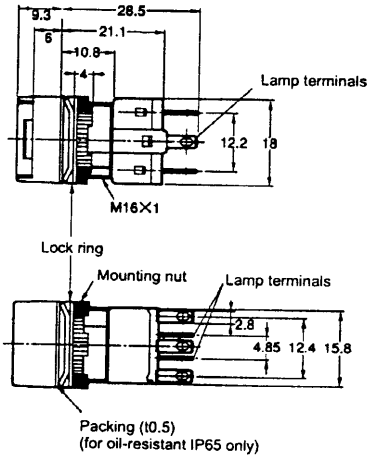

Panel Cutouts

See page 14 for panel cutouts

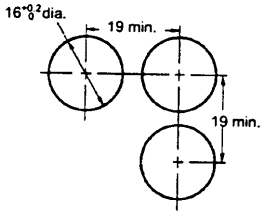

Round
A16□-T

Solder terminals (tab terminals #110)

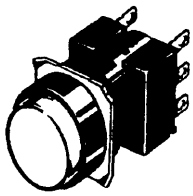

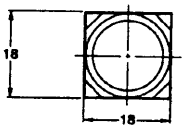

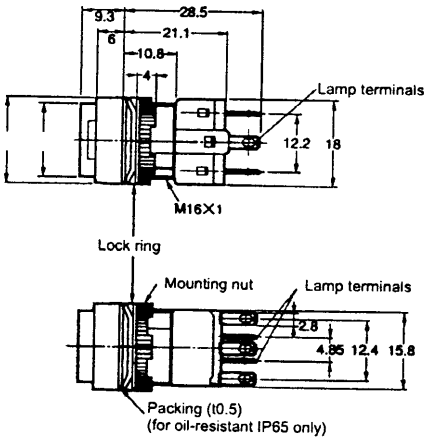

Panel Cutouts

See page 14 for panel cutouts

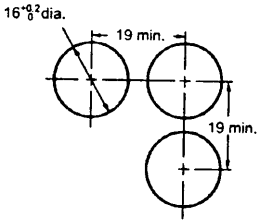

■ Indicators without Transformer

Rectangular
M16-J

Solder terminals (tab terminals #110)

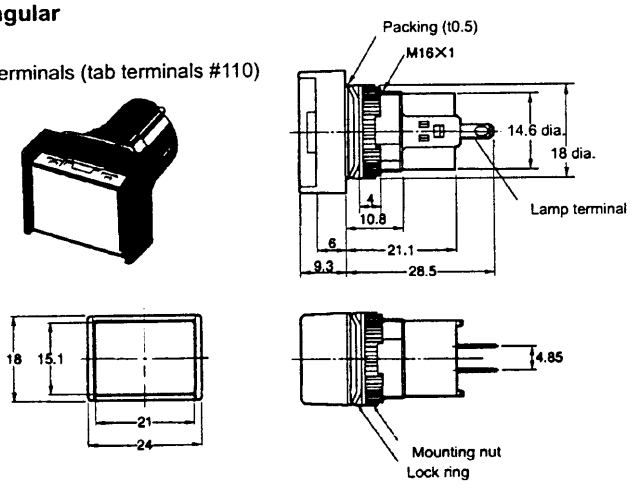

Square
M16-A

Solder terminals (tab terminals #110)

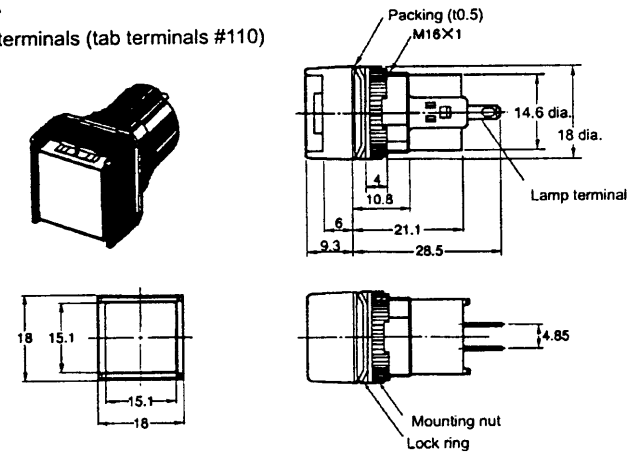

Round
M16-T

Solder terminals (tab terminals #110)

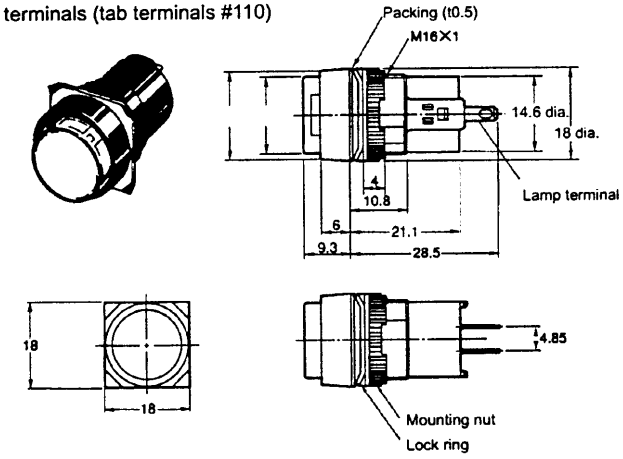

■ Lamps

LED
A16-5D□/-12D□/-24D□

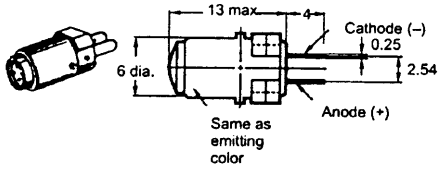

Incandescent Lamp
A16-5/-12/-24

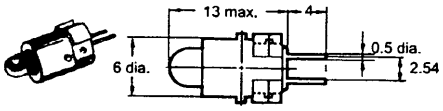

Neon Lamp
A16-1N/-2N

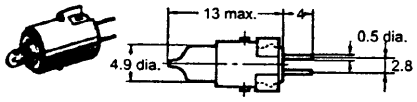

■ Panel Cutouts

Rectangular
A16□-J/M16□-J
(Top View)

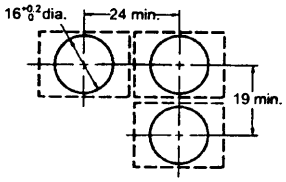

Square A16□-A/M16□-A
Round A16□-T/M16□-T
(Top View)

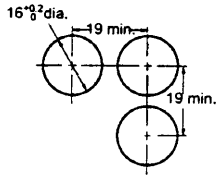

Note: 1. Make sure the thickness of the mounting panel is between 0.5 and 3.2 mm. If, however, a Switch Guard or Dust Cover is used, the thickness of the mounting panel must be between 0.5 and 2 mm.
2. If the panel is to be finished with coating, etc., make sure that the panel meets the specified dimensions after coating.

■ Terminal Arrangement

Non-lighted Pushbutton Switches are also provided with lamp terminals.

SPDT Switches

Lighted type

Dimensions of Terminal Holes

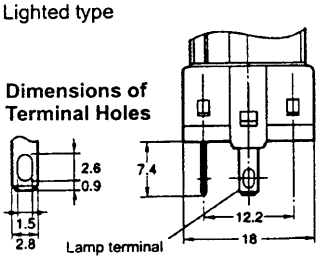

Terminal Arrangement (Bottom View)

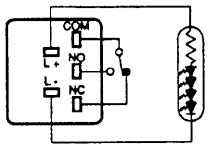

Note: The L+ is not shown on the Switch Unit.

DPDT Switches

Lighted type

Dimensions of Terminal Holes

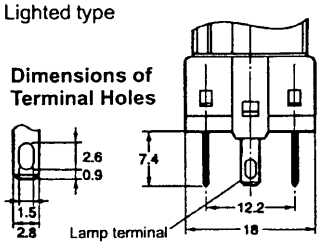

Terminal Arrangement (Bottom View)

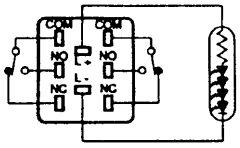

Note: The L+ is not shown on the Switch Unit.

Indicator

Dimensions of Terminal Holes

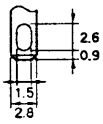

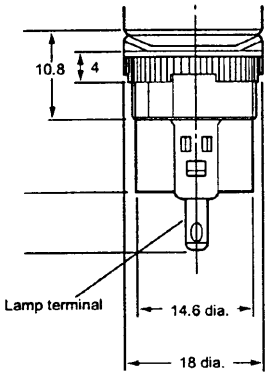

Terminal Arrangement (Bottom View)

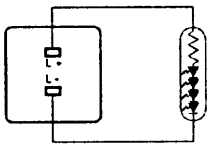

Note: The L+ is not shown on the Switch Unit.

■ Accessories, Tools, and Components

Extractor

A3PJ-5080

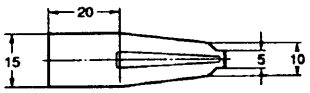

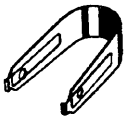

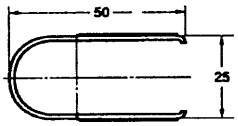

Legend Panels

A3BJ-520□

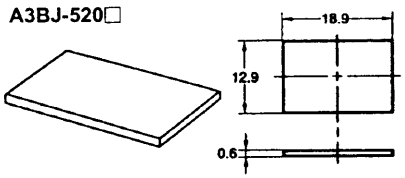

A3BA-520□

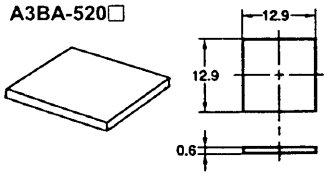

A3BT-520□

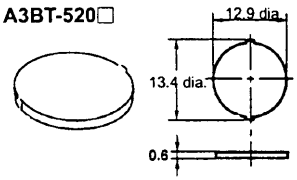

Note: 1. The panel is 0.6 mm thick.
2. The panel is made of the materials listed in the following table.

Color	Degree of protection	Materials
Milky	IP40	Polyacrylate resin
	IP65	
Transparent	IP40	Polycarbonate resin
	IP65	Polyacrylate resin

Note: The standard model is transparent.

Screw Fitting

A3B-3004

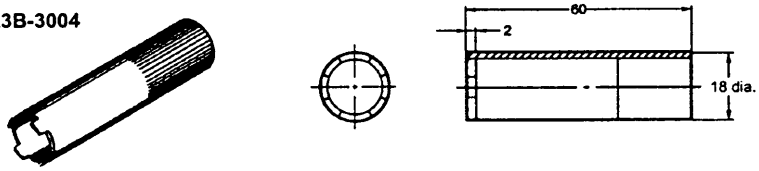

Panel Plugs (Black Resin)

Select the Plug that fits the panel design and mount from the front of the Panel. Panel cutouts are the same as those for Switches.

Rectangular
A3BJ-3003

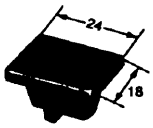

Square
A3BA-3003

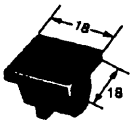

Round
A3BT-3003

Lock Fitting

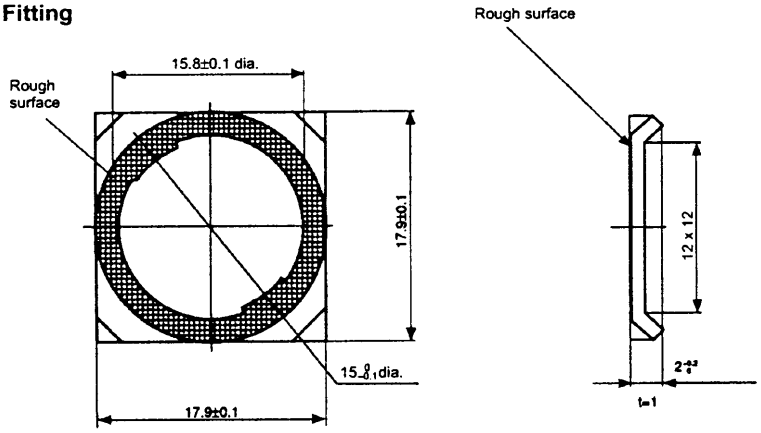

A16Z-5080 Extractor

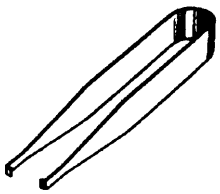

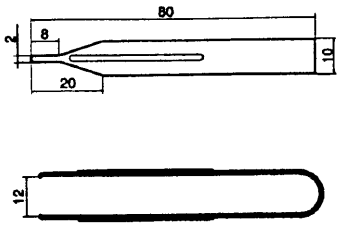

■ Dimensions when Mounting Accessories

Switch Guards

Rectangular
A3BJ-5050

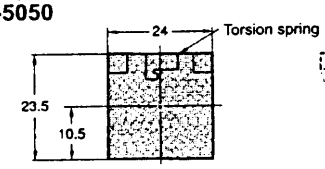

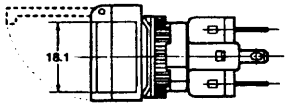

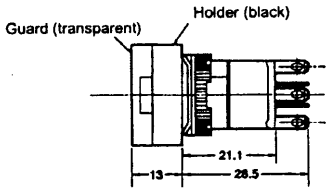

Panel Cutouts (Top View)

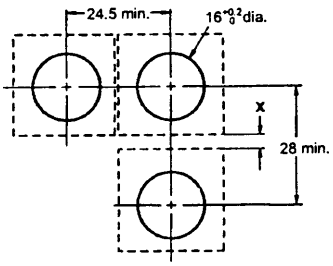

Note: The above illustration shows a case where 4.5 mm is provided for the distance "x." If no clearance is required for the "x" section, the vertical mounting dimension can be as small as 24 mm. Set this distance according to operating conditions.

Square
A3BA-5050

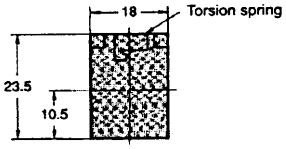

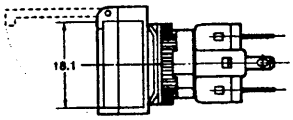

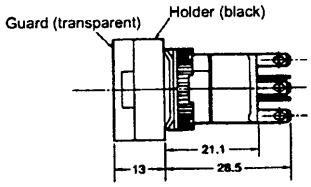

Panel Cutouts (Top View)

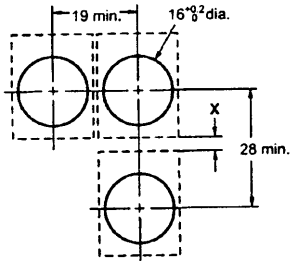

Note: The above illustration shows a case where 4.5 mm is provided for the distance "x." If no clearance is required for the "x" section, the vertical mounting dimension can be as small as 24 mm. Set this distance according to operating conditions.

Dust Covers

Rectangular
A3BJ-5060

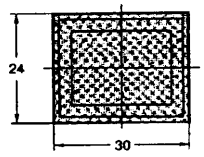

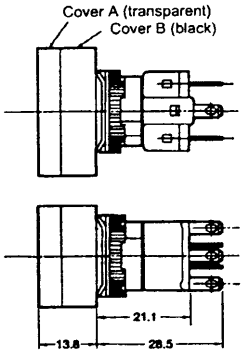

Panel Cutouts

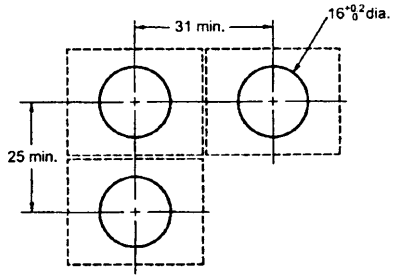

Square
A3BA-5060

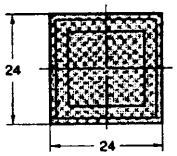

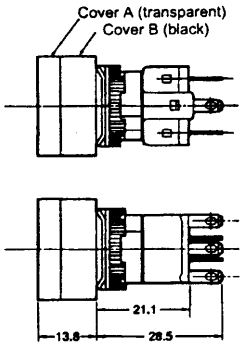

Panel Cutouts

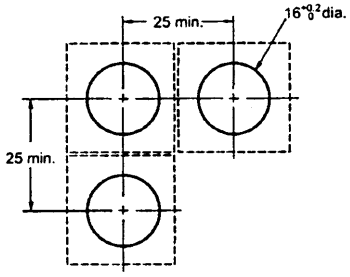

Round
A3BT-5050

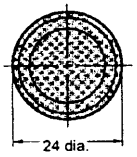

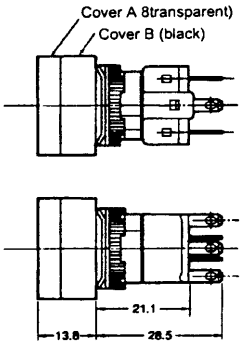

Panel Cutouts

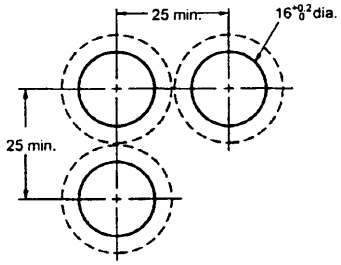

Installation

■ Mounting the Panel

After mounting the Pushbutton Unit to the panel, snap in the Socket Unit from the back of the panel.

Mounting the Panel

Insert the Pushbutton Unit into the front of the panel, and fix the lock ring and mounting nut from the terminal side.

Make sure that the lock ring is aligned with the thread of the case and the edge of the lock ring is touching the panel.

Tighten the mounting nuts to a torque of 0.20 to 0.39 N • m (3 to 5 kgf • cm).

The maximum tightening torque is 0.39 N • m (5 kgf • cm).

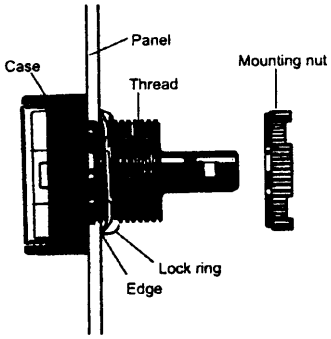

Switch Mounting

Snap on the Switch Unit to the Pushbutton Unit.

Make sure the the Switch Unit is in the proper orientation when snapping on to the Pushbutton Unit.

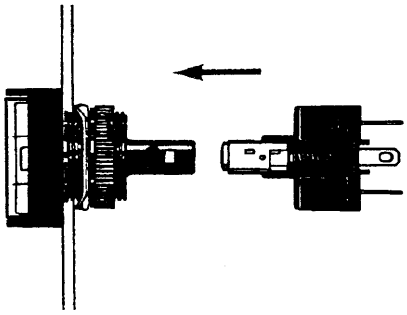

Switch Removal

Grip the part between the Switch holder of the case and the Switch Unit using the A16Z-5080 Extractor, and pull to remove the Switch Unit.

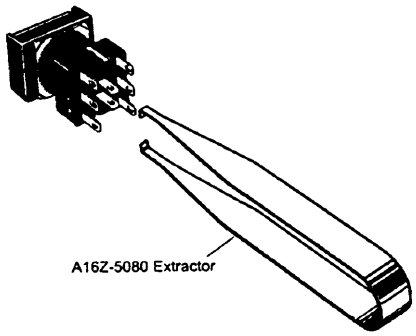

■ Mounting and Replacing the Operating Part

Removing and Mounting the Operating Part

1. Remove the operating part as shown in the following diagram. If the operating part cannot be removed by hand, use the A3PJ-5080 Extractor.

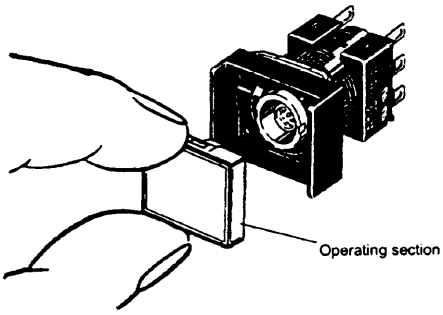

2. To attach the operating part, push until it clicks into place.

Removing the Lamp

Removing from the Operating Part End

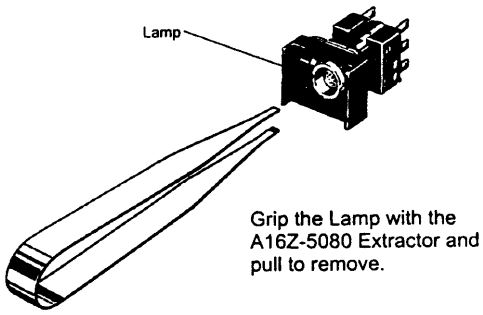

Removing from the Switch Unit End

The Lamp can be removed by hand once the Switch is removed using the A16Z-5080 Extractor.

Installing the Lamp

When mounting the Lamp, make sure it is facing the direction shown in the following diagram. Insert the Lamp while matching the protruding part of the Lamp and the small guides on the outer surface of the case.

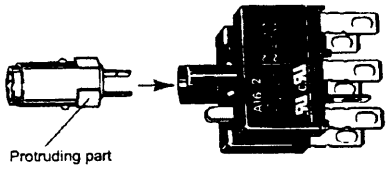

The Lamp can be mounted from the operating part end by using the A16Z-5080 Extractor. The lamp can be mounted by following the opposite procedure for removing the Lamp.

Precautions

⚠ WARNING

Do not apply a voltage between the incandescent lamp and the terminal that is greater than the rated voltage. If the incandescent lamp is broken, the operating part may pop out.

Always turn OFF the power and wait for 10 minutes before replacing the incandescent lamp. If the lamp is replaced immediately after the power is turned OFF, the remaining heat may cause burns.

■ Correct Use

Mounting

Always make sure that the power is turned OFF before mounting, removing, or wiring the Switch, or performing maintenance.

Do not tighten the mounting nut more than necessary using tools such as pointed-nose pliers. Doing so will damage the mounting nut. The tightening torque is 0.20 to 0.39 N • m (3 to 5 kgf • cm).

Wiring

Solder terminals and quick-connect terminals (#110) are commonly used for terminals.

Be sure to use electrical wires that are a size appropriate for the applied voltage and carry current (conductor size is 0.5 to 0.75 mm^2). Perform soldering according to the conditions provided below. If the soldering is not properly performed, the lead wires will become detached, resulting in short-circuits.

1. Hand soldering: 30 W, within 5 s
2. Dip soldering: 240°C, within 3 s

Wait for one minute after soldering before exerting any external force on the solder.

Use non-corrosive resin fluid as the flux.

Make sure that the electric cord is wired so that it does not touch the Unit. If the electric cord will touch the Unit, then electric wires with a heat resistance of 100°C min. must be used.

After wiring the Switch, maintain an appropriate clearance and creepage distance.

Operating Environment

The IP65 model is designed with a protective structure so that it will not sustain damage if it is subjected to water from any direction to the front of the panel.

Using the Microload

Insert a contact protection circuit, if necessary, to prevent the reduction of life expectancy due to extreme wear on the contacts caused by loads where inrush current occurs when the contact is opened and closed.

The A16 allows both a general-purpose load (125 V at 5A, 250 V at 3 A) and a microload. If a general-purpose load is applied, however, the microload area cannot be used. If the microload area is used with a general-purpose load, the contact surface will become rough, and the opening and closing of the contact for a microload may become unreliable.

The minimum applicable load is the N-level reference value. This value indicates the malfunction reference level for the reliability level of 60% (λ 60) (conforming to JIS C5003).

The equation, λ 60 = 0.5 x 10^{-4}/time indicates that the estimated malfunction rate is less than 1/2,000,000 with a reliability level of 60%.

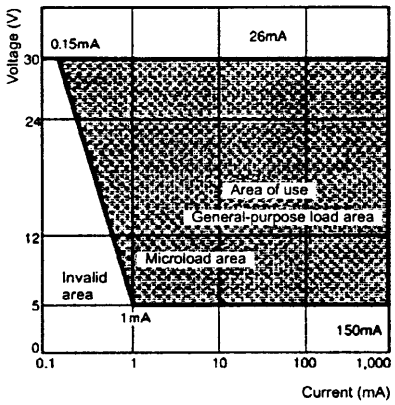

LEDs

The LED current-limiting resistor is built-in, so internal resistance is not required.

Rated voltage	Internal limiting resistor
5 VDC	33 Ω
12 VDC	270 Ω
24 VDC	1600 Ω

Others

The oil-resistant IP65 uses NBR rubber and is resistant to general cutting oil and cooling oil. Some particular oils cannot be used with the oil-resistant IP65, however, so contact your OMRON representative for details.

If the panel is to be finished with coating, etc., make sure that the panel meets the specified dimensions after the coating.

Do not subject the Switch to extreme shock or vibration. Doing so will cause malfunctions and damage to the Switch.

Do not let sharp objects come into contact with the Switches that are made of resin. Doing so will damage the Switches, causing scratches on the outside of the operating parts, and malfunction.

When handling the Switches, do not throw or drop them.

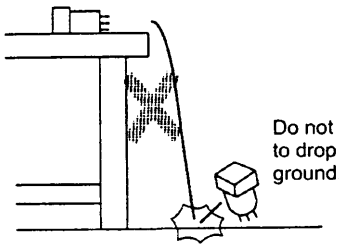

Do not allow the Switch to drop and hit the ground.

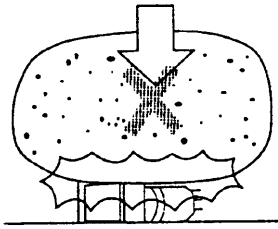

Do not place or drop heavy objects on the Switch.

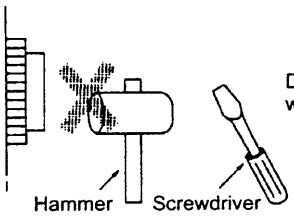

Do not operate the Switch with hard or sharp objects.

ALL DIMENSIONS SHOWN ARE IN MILLIMETERS.
To convert millimeters into inches, multiply by 0.03937. To convert grams into ounces, multiply by 0.03527.