THIS DRAWING IS UNPUBLISHED. RELEASED FOR PUBLICATION -,- .
© COPYRIGHT - BY TYCO ELECTRONICS CORPORATION. ALL INTERNATIONAL RIGHTS RESERVED.

LOC	DIST
G	02

REVISIONS

P	LTR	DESCRIPTION	DATE	DWN	APVD
	E1	REDRAWN PER ECR 09-018897	08SEPT09	JR	TM

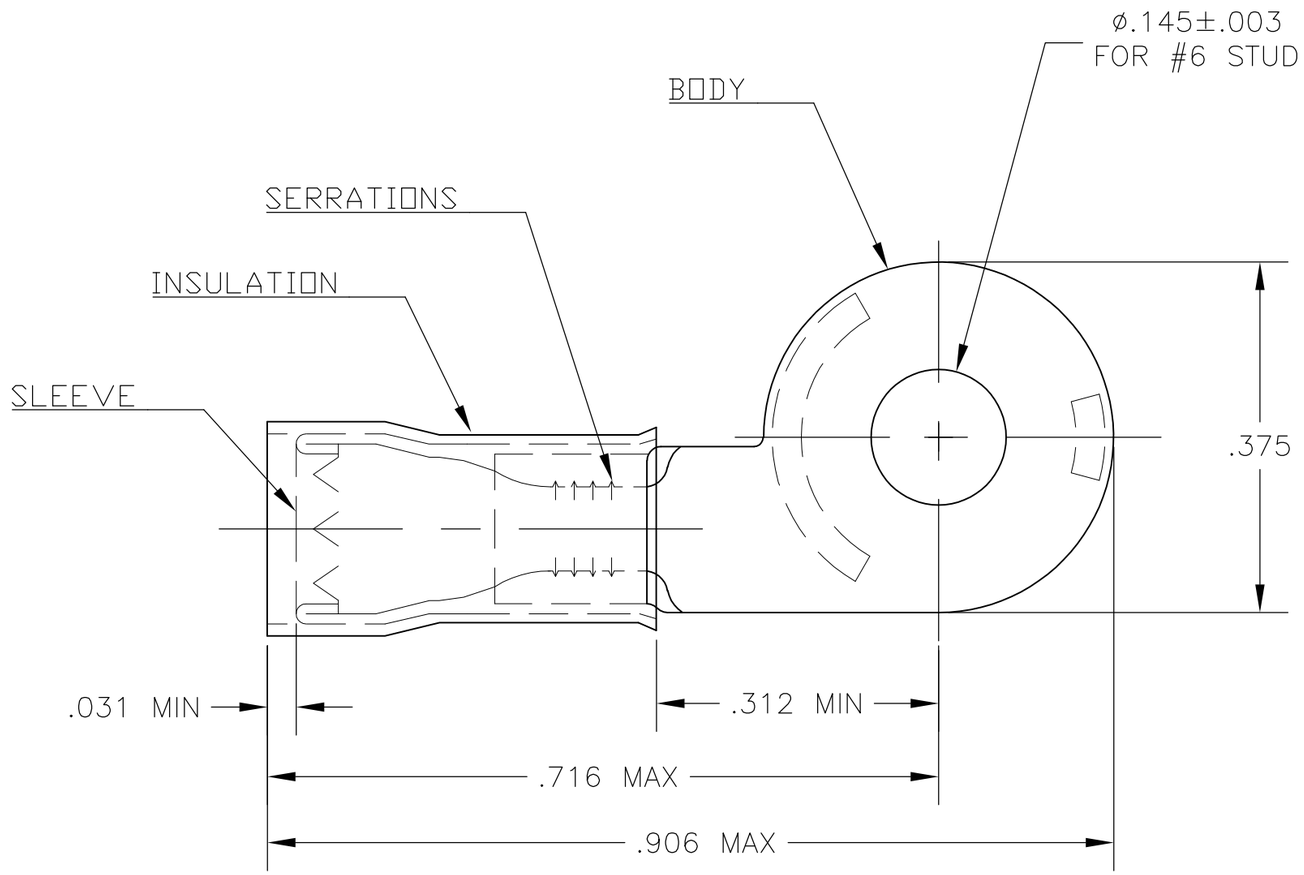

1 TONGUE MATERIAL THK IS .031±.002

2 FOR .105-.150 WIRE INSULATION DIA

	QTY	DESCRIPTION	MATERIAL & FINISH	PART NO
OBSOLETE	~~1~~	~~323817~~ ON TAPE	BODY & SLEEVE: COPPER PER ASTM B-152 TIN PL PER ASTM B545 INSULATION: NYLON PER MIL-M-20693, TYPE 1, COLOR-BLUE	~~2-323817-2~~
	1	WIRE TERMINAL		323817

THIS DRAWING IS A CONTROLLED DOCUMENT.

DIMENSIONS: INCHES

TOLERANCES UNLESS OTHERWISE SPECIFIED:

0 PLC	± -
1 PLC	± -
2 PLC	± -
3 PLC	± .008
4 PLC	± -
ANGLES	± 5°

MATERIAL -

FINISH -

DWN jr ruth 08SEP09
CHK TOM MICHIELUTTI 08SEPT09
APVD TOM MICHIELUTTI 08SEPT09
PRODUCT SPEC —
APPLICATION SPEC —
WEIGHT —

Tyco Electronics
Tyco Electronics Corporation
Harrisburg, PA 17105-3608

NAME
TERMINAL, PIDG, NYLON, RING TONGUE, OFFSET, WIRE SIZE: 16-14
—

SIZE	CAGE CODE	DRAWING NO	RESTRICTED TO
A3	00779	C-323817	—

CUSTOMER DRAWING

SCALE	SHEET	REV
6:1	1 OF 1	E1