ENG No:			AE-3192-NA	AE-3192-NB	AE-3192-NF	AE-3192-NK
DIM "D"			(11.43) .450	(16.18) .637	(32.51) 1.280	(17.47) .688
DIM "C"			(19.05) .750	(23.80) .937	(39.67) 1.562	(25.40) 1.000
CCT SIZE	DIM "A"	DIM "B"	PART No	PART No	PART No	PART No
2	(3.96) .156	(7.92) .312	26-20-2021	26-20-2022	26-20-2026	26-21-2021
3	(7.92) .312	(11.89) .468	26-20-2031	26-20-2032	26-20-2036	26-21-2031
4	(11.89) .468	(15.85) .624	26-20-2041	26-20-2042	26-20-2046	26-21-2041
5	(15.85) .624	(19.81) .780	26-20-2051	26-20-2052	26-20-2056	26-21-2051
6	(19.81) .780	(23.77) .936	26-20-2061	26-20-2062	26-20-2066	26-21-2061
7	(23.77) .936	(27.74) 1.092	26-20-2071	26-20-2072	26-20-2076	26-21-2071
8	(27.74) 1.092	(31.70) 1.248	26-20-2081	26-20-2082	26-20-2086	26-21-2081
9	(31.70) 1.248	(35.66) 1.404	26-20-2091	26-20-2092	26-20-2096	26-21-2091
10	(35.66) 1.404	(39.62) 1.560	26-20-2101	26-20-2102	26-20-2106	26-21-2101
11	(39.62) 1.560	(43.59) 1.716	26-20-2111	26-20-2112	26-20-2116	26-21-2111
12	(43.59) 1.716	(47.55) 1.872	26-20-2121	26-20-2122	26-20-2126	26-21-2121
13	(47.55) 1.872	(51.51) 2.028	26-20-2131	26-20-2132	26-20-2136	26-21-2131
14	(51.51) 2.028	(55.47) 2.184	26-20-2141	26-20-2142	26-20-2146	26-21-2141
15	(55.47) 2.184	(59.44) 2.340	26-20-2151	26-20-2152	26-20-2156	26-21-2151
16	(59.44) 2.340	(63.40) 2.496	26-20-2161	26-20-2162	26-20-2166	26-21-2161
17	(63.40) 2.496	(67.36) 2.652	26-20-2171	26-20-2172	26-20-2176	26-21-2171
18	(67.36) 2.652	(71.32) 2.808	26-20-2181	26-20-2182	26-20-2186	26-21-2181
19	(71.32) 2.808	(75.29) 2.964	26-20-2191	26-20-2192	26-20-2196	26-21-2191
20	(75.29) 2.964	(79.25) 3.120	26-20-2201	26-20-2202	26-20-2206	26-21-2201

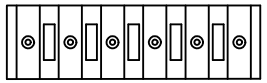

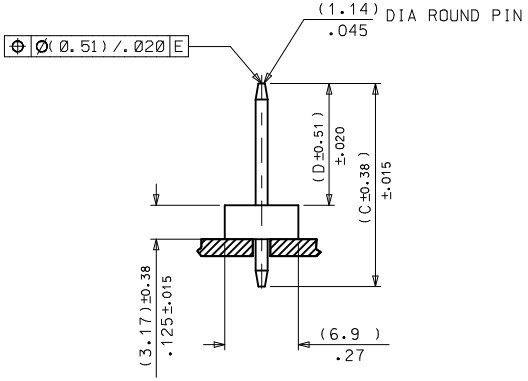

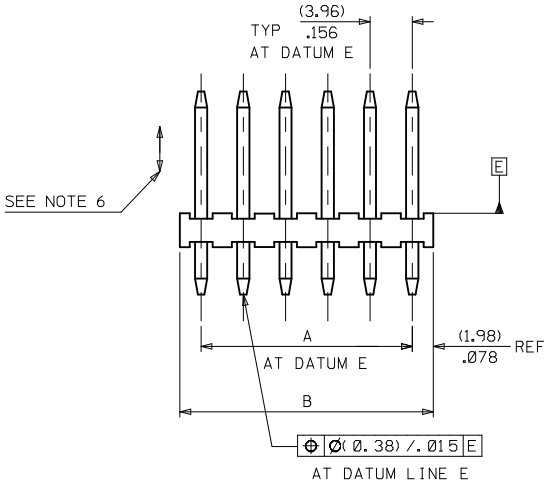

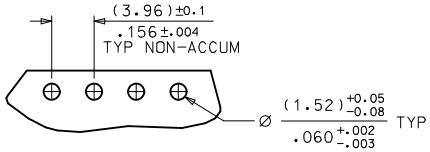

RECOMMENDED PCB HOLE DIMENSIONS

NOTES:
1. MATERIAL: HOUSING: NYLON, UL94V-2, COLOR: NATURAL
   PINS: BRASS
2. FINISH: (0.00254)/.000100 MIN. MATTE TIN OVER
   (0.00127)/.000050 MIN. NICKEL
3. PRODUCT SPECIFICATION: PS-99020-0087
4. PACKAGING SPECIFICATION: PER PK-3192-001
5. THIS PART CONFORMS TO CLASS B REQUIREMENTS OF
   COSMETIC SPECIFICATION PS-45499-002.
6. PIN PUSHOUT FORCE 13.3N / 3 LBS MIN.
7. PIN MUST CONFORM TO MOLEX SOLDERABILITY SPEC
   SMES-152 AFTER PLATING.
8. RECOMMENDED PCB BOARD THICKNESS: 1.6MM.

REVISE NOTE 2
EC NO: UCP2012-1821
DRWN:MMSTROH 2011/11/29
CHKD:MKIPPER 2011/12/02
APPR:FSMITH 2012/02/02
DESCRIPTION
REV

QUALITY SYMBOLS
E/V=0
E/F=0
E/P=0

GENERAL TOLERANCES (UNLESS SPECIFIED)

	mm	INCH
4 PLACES	± ---	± ---
3 PLACES	± ---	± .010
2 PLACES	± 0.25	± .014
1 PLACE	± 0.35	± ---
ANGULAR ±1/2°		

DRAFT WHERE APPLICABLE MUST REMAIN WITHIN DIMENSIONS

DIMENSION STYLE: MM/IN
SCALE: 3:1
DESIGN UNITS: METRIC
FIRST ANGLE PROJECTION

DRAWN BY: T.MAHON DATE: 98/10/02
CHECKED BY: M.GOONEY DATE: 98/10/09
APPROVED BY: MWILHITE DATE: 98/10/09

TITLE: WAFER FLAT MOLDED KK .156 .045 DIAMETER PINS

MOLEX INCORPORATED

MATERIAL NO.: SEE CHART
DOCUMENT NO.: SDAE-3192-N*
SHEET NO.: 1 OF 1
SIZE: A2

THIS DRAWING CONTAINS INFORMATION THAT IS PROPRIETARY TO MOLEX INCORPORATED AND SHOULD NOT BE USED WITHOUT WRITTEN PERMISSION