REVISIONS	
Ø 07/07/10 ECN-134527	TP S. HILLERICH — CONCEPT PRINT.
1 08/31/10 ECN-138116	LM M. PUFFER — UPDATE FROM CONCEPT PRINT TO FAB PRINT; RELEASE FOR LIMITED PRODUCTION
A 10-26-10 ECN-141643	LV J. SMALLWOOD — RELEASE FOR PRODUCTION.

RoHS Compliant Pb 82 LEAD

PRODUCT MUST WITHSTAND LEAD-FREE PROCESSING

EUROPEAN UNION ROHS DIRECTIVE, 2002/95/EC

UNLESS OTHERWISE NOTED

DIMENSIONS ARE IN INCHES — TOLERANCES ARE:

ONE PLACE DECIMALS ±.1 — THREE PLACE DECIMALS ± .010

TWO PLACE DECIMALS ±.02 — FOUR PLACE DECIMALS ± .0050

TITLE: SEAM TO SEAM CUSTOM

DWG NO: SCF-155385-01-MA

SHEET 1 OF 1

TOP LAYER

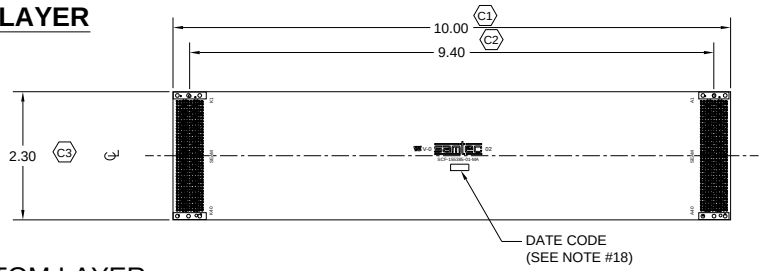

PINOUT TABLE		
J1	SIGNAL	J2
SEE VITA 57 CHART FOR LOW PIN COUNT		

BOTTOM LAYER

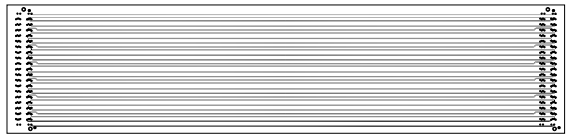

STIFFENERS

SIDE VIEW

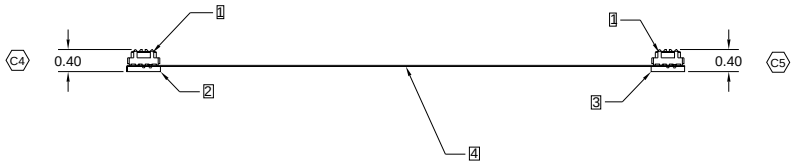

ALL LAYERS

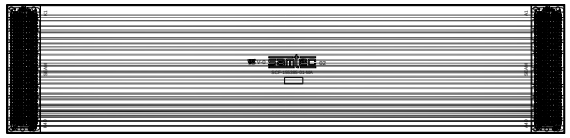

LAYER STACKUP

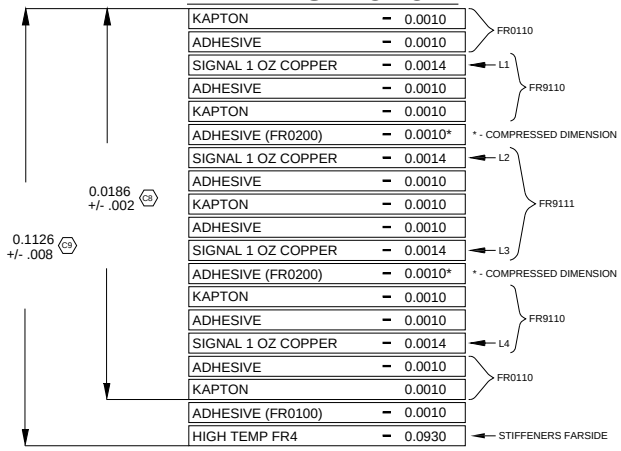

NOTES:

1. C — REPRESENTS A CRITICAL DIMENSION.
2. SPECIFICATIONS — UNLESS OTHERWISE SPECIFIED, FABRICATION OF THIS FLEX SHALL BE IN CONFORMANCE WITH THE FOLLOWING SPECIFICATIONS
   IPC-6013 CLASS2.
   IPC-A-610 CLASS2.
3. DIMENSIONS: INCHES.
4. TOLERANCES: UNLESS OTHERWISE SPECIFIED:
   DATUM HOLE TO BOARD EDGE LOCATIONS ±0.010, UNLESS OTHERWISE SPECIFIED.
   DATUM HOLE TO V-SCORE LOCATIONS ±0.010, UNLESS OTHERWISE SPECIFIED.
   DATUM HOLE TO DRILLED HOLE LOCATIONS ±0.004, UNLESS OTHERWISE SPECIFIED.
5. FR4 Tg: MINIMUM GLASS TRANSITION TEMPERATURE (Tg) OF 170° C.
6. FLAME CLASS: MEET UL 94V-0.
7. MOT: MANUFACTURER MUST BE UL RECOGNIZED TO PRODUCE THIS PRODUCT SUCH THAT IT MEETS OPERATING TEMPERATURE OF -60° C TO +105° C.
8. PLATING: PER IPC CLASS2.
9. COVERFILM: TO BE IN ACCORDANCE WITH IPC 6013 CLASS2.
10. FINISH: 8 MICRO INCHES OF IMMERSION SILVER MIN.
11. NOMENCLATURE: WHITE NONCONDUCTIVE INK.
    NO INK TO APPEAR ON EXPOSED COPPER SUCH AS PLATED THROUGH HOLE PADS AND SURFACE MOUNT LANDS. INK ON SOLDER MASK COVERED PADS IS PERMISSIBLE.
    CLIPPING OF SILKSCREEN (0.008 MAX FROM PADS) IS PERMITTED IF REQUIRED.
12. ELECTRICAL TEST: ALL ASSEMBLIES TO BE 100% ELECTRICAL TESTED FOR ISOLATION AND CONTINUITY.
    ALL ASSEMBLIES TO BE 100% HI-POT TESTED AT 300V.
    TESTED TO STANDARD NA-FL-WI-2003-M.
13. IMPEDANCE: BOARDS ARE "BUILD TO STACK". IMPEDANCE REQUIREMENTS FOR EACH LAYER ARE SHOWN BELOW FOR REFERENCE.
14. LAYER STACKUP:

ARTWORK NAME	TYPE	COPPER THICKNESS	WIDTH	IMPEDANCE
TOP SIDE				
MSK-NS.GBR	COVERFILM	NA	NA	NA
LAYER_1_SIG_AW.GBR	SIGNAL	1.0 OZ	NA	NA
LAYER_2_SIG_AW.GBR	SIGNAL	1.0 OZ	0.0035(0.0055)	100OHMS(DP)
LAYER_3_SIG_AW.GBR	GROUND PLANE	1.0 OZ	NA	NA
LAYER_4_SIG_AW.GBR	SIGNAL	1.0 OZ	0.0050(0.0090)	100 OHMS(DP)
MSK-FS.GBR	COVERFILM	NA	NA	NA
BOTTOM SIDE				

15. INSPECTION: ALL CRITICAL FEATURES TO BE INSPECTED BEFORE SHIPMENT.
16. MIN TRACE/SPACE: MIN TRACE = .0035 +/-.0010, MIN SPACE = .0055 +/-.0010
17. PACKAGING: ALL ASSEMBLIES TO BE PACKAGED TO PACKAGING STANDARDS NA-FL-WI-1026-M.
    ALL ASSEMBLIES TO BE DELIVERED FLAT.
18. DATE CODE: "XXX" [NUMERICAL DAY OF CALENDAR YEAR]
    "XX" [YEAR]
    EXAMPLE: 00509 = JAN 5, 2009 .

REFERENCE CUSTOM PRODUCT TRAVELER FOR PROCESS STEPS.

TABLE 1				
HOLE CHART FOR SINGLE CIRCUIT (NOT STIFFENERS)				
ALL UNITS ARE IN INCHES				
SYMBOL	DRILL SIZE	COUNT	PLATED / NON	TOLERANCE
×	0.0079	320	PLATED	+/-.003
✳	0.028	4	NON-PLATED	+/-.002
┼	0.0512	4	NON-PLATED	+/-.002

BOM		
ITEM NO.	PART NUMBER	QUANTITY
1	ASP-134604-01	2
2	STF-01-FS	1
3	STF-02-FS	1
4	SUB-SCF-155385-01-MA	1

FFF NOTE

SAMTEC RESERVES THE RIGHT TO MODIFY ELEMENTS OF THIS PRODUCT AND DRAWING IN ORDER TO IMPROVE QUALITY AND MANUFACTURABILITY WITHOUT NOTIFICATION OR CUSTOMER APPROVAL AS LONG AS THE CHANGES BEING MADE DO NOT AFFECT ITS FORM, FIT, OR FUNCTION.

PROPRIETARY NOTE

THIS DOCUMENT CONTAINS INFORMATION CONFIDENTIAL AND PROPRIETARY TO SAMTEC INC. AND SHALL NOT BE REPRODUCED OR TRANSFERRED TO OTHER DOCUMENTS OR DISCLOSED TO OTHERS OR USED FOR ANY PURPOSE OTHER THAN THAT FOR WHICH IT WAS OBTAINED WITHOUT THE EXPRESSED WRITTEN CONSENT OF SAMTEC INC.

F:\DWG\FLEX\SCF\155000\155385-01\SCF-155385-01-M

520 PARK EAST BLVD. NEW ALBANY, INDIANA 47150
PHONE (812) 944-6733 E-MAIL: INFO@SAMTEC.COM CODE 55322

MADE BY: TIM R. 06/22/10

SCF-155385-01-MA

SHEET 1 OF 1