THIS COPY IS PROVIDED ON A RESTRICTED BASIS AND IS NOT TO BE USED IN ANY WAY DETRIMENTAL TO THE INTERESTS OF PANDUIT CORP.

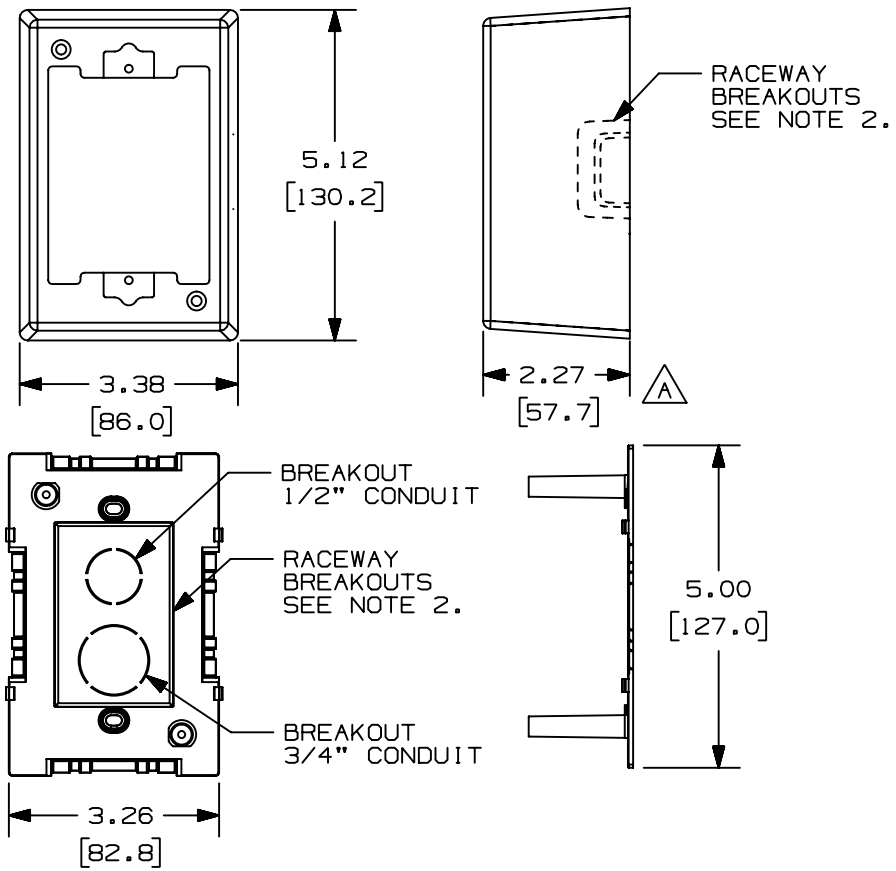

PANDUIT P/N	WEIGHT
JBP1I	2.4 LB/10 PCS (1084 g/10 PCS)

NOTES:

1. SEE CURRENT CATALOG FOR ADDITIONAL PART SUFFIXES TO INDICATE COLOR AND OR PACKAGE QUANTITY.
2. BREAKOUTS FOR LD, LDS AND LDP RACEWAYS ARE PROVIDED ON ALL FOUR SIDES OF THE BASE AND COVER.
3. COVER IS EXTENDED OUT AND DOWN AROUND SIDES OF BASE WHEN ASSEMBLED.
4. DIMENSIONS IN PARENTHESES ARE IN METRIC.

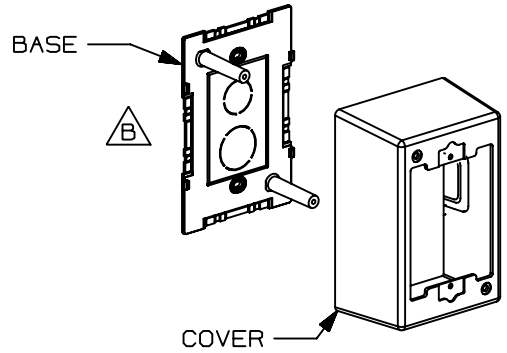

REV	DATE	BY	CHK	DESCRIPTION	ECN	CHK	CUST	SUP
2	3-04-03	JBN		B. REVISED VIEW	36402-06			
1	3-31-99	DW	HIW	A. ADDED DIMENSION.	36402-06	HIW	HIW	
R	1-28-99	DW	HIW	RELEASED TO PRODUCTION.	36402-06	HIW	HIW	

CAD FILENAME/LAYERS: D36402BG_DC_JBP1I_01B.prt

PANDUIT CORP. TINLEY PARK, ILLINOIS

INTERMEDIATE JUNCTION BOX
SINGLE GANG (JBP1I)
CUSTOMER DRAWING

UNLESS OTHERWISE SPECIFIED, DIMENSIONAL TOLERANCES ARE:
(.X) ± (.XXX) ±
(.XX) ±.03(.8) ANGLES ±

UNLESS OTHERWISE SPECIFIED, ALL DIMENSIONS ARE GIVEN IN INCHES, THIRD ANGLE PROJECTION.

DRAWN BY: DW
DATE: 1-28-99
CHECKED BY: HIW
MAT'L: PVC
SCALE: NONE
DRAWING NO.: 36402-06
DWG SIZE: A