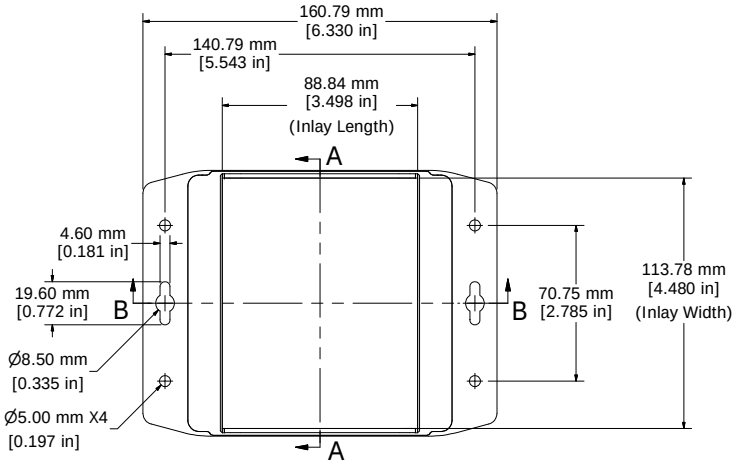

ENCLOSURE ASSEMBLY TOP VIEW

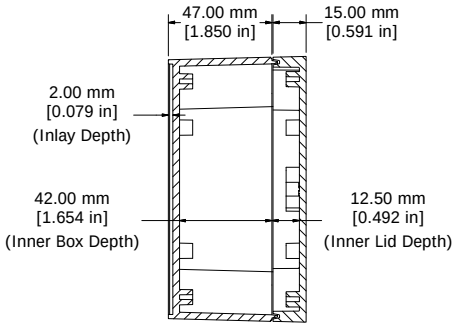

SECTION A-A
END VIEW OF ASSEMBLY

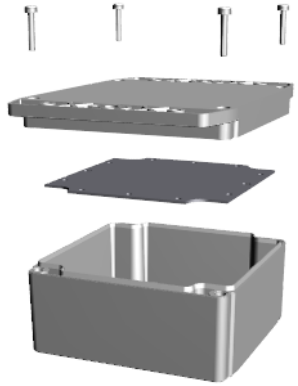

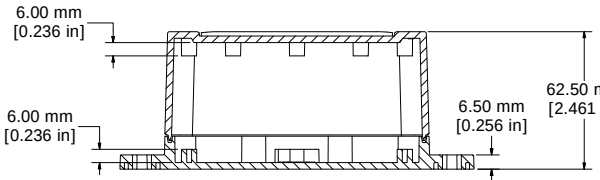

SECTION B-B (SIDE VIEW OF ASSEMBLY)

Polycarbonate Version Only

c UL US LISTED
File #E65324
NEMA 4, 4X

Enclosures can be Factory Modified (Milling, Drilling, Printing etc.)
Solid models of this enclosure available in STEP or IGES.
Contact Factory mjm@hammondmfg.com

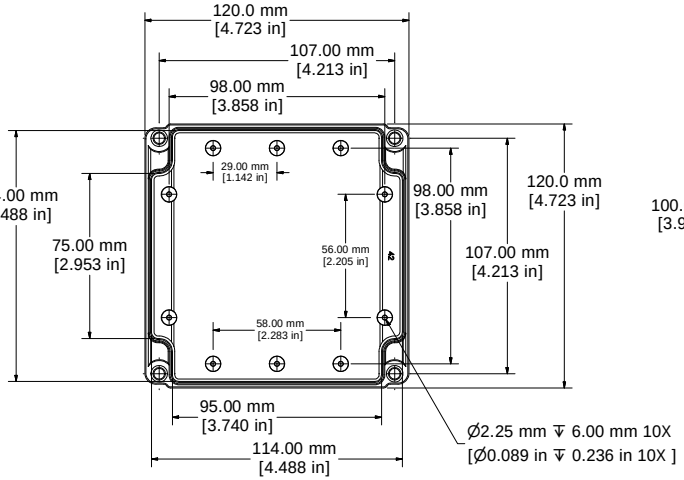

BOX INSIDE VIEW

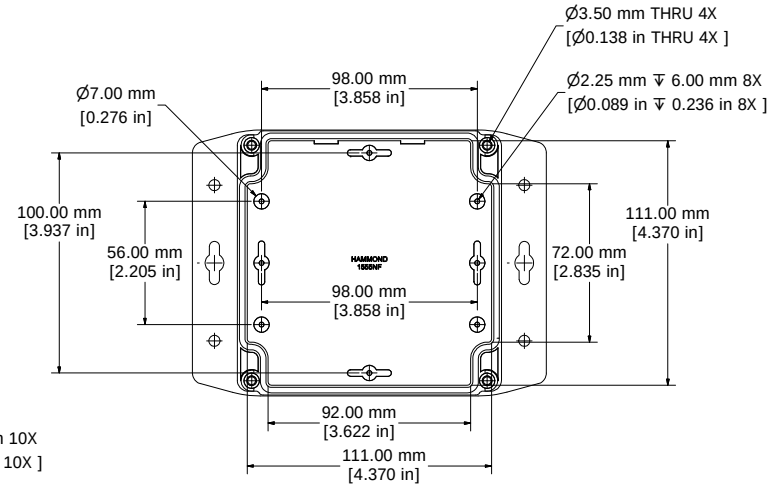

FLANGED LID INSIDE VIEW

NOTE
Purchased assembly includes styled box, flanged lid, 4 cover screws, and preformed silicone gasket. General Purpose ABS version is not UL approved. (Matl UL94 - HB) Polycarbonate version is UL 508 approved. (Matl UL94 - V0)
Recommended Cover screw torque -- 2.5 lbf-in (30 cN-m)

1555NF	
1555NF Regular Enclosure	
General Purpose ABS RAL-7035	1555NF42GY
Polycarbonate RAL-7035	1555N2F42GY
ACCESSORIES	
Steel Inner Panels	1555NFPL
Steel Panel / P.C. Board Self Tapping Screw [#6 X 1/4" (6.4mm) Plated]	1598ATS100
Cover Screws (Pkg 4) [M4 X 20mm Stainless Steel]	SC1554

HAMMOND MANUFACTURING™

1555NF42

www.hammondmfg.com