THIS COPY IS PROVIDED ON A RESTRICTED BASIS AND IS NOT TO BE USED IN ANY WAY DETRIMENTAL TO THE INTERESTS OF PANDUIT CORP.

	PANDUIT P/N	FC ADAPTER DESCRIPTION	WEIGHT
A	CMFC**	PHOSPHORUS BRONZE SPLIT SLEEVE W/RED DUST CAPS	1.83 LB/100 PCS (832g/100 PCS
B	CMFCZ**	CERAMIC ZIRCONIA SPLIT SLEEVE W/BLACK DUST CAPS	1.94 LB/100 PCS (883g/100 PCS

NOTES:
1. SEE CURRENT CATALOG FOR ADDITIONAL PART NUMBER SUFFIXES TO INDICATE COLOR AND OR PACKAGE QUANTITY.
2. SEE CATALOG FOR COMPLETE LIST OF PARTS APPLICABLE FOR USE WITH THIS PART.
3. MATERIALS:
   SLEEVE: SEE TABLE
   ADAPTER: NICKEL PLATED BRASS
   MODULE BASE: ABS
   CAPS: RUBBER
4. DIMENSIONS IN PARENTHESES ARE IN METRIC.

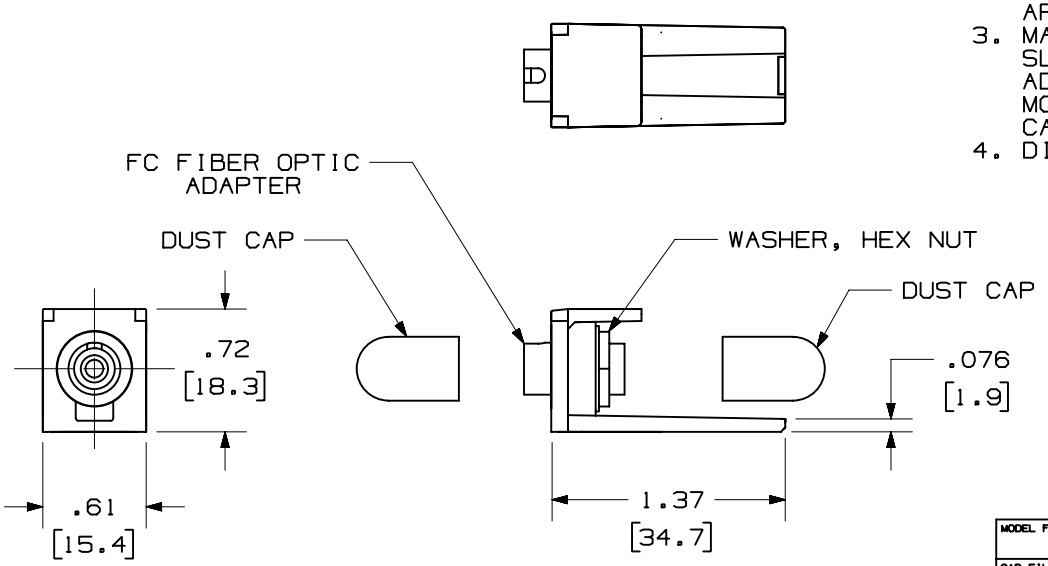

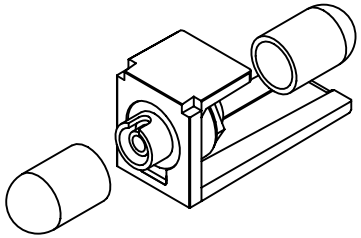

REV	DATE	BY	CHK	DESCRIPTION	ECN	R	CUST	SUP	OTH
1	05-10-00	EFK		B. WAS: CMFCC A. WAS: CMFCZ	00853-02				
R	04-17-00	TA	AMYR	RELEASED TO PRODUCTION	00853-02	AMYR	FJD		

MODEL FILENAME: M00853BA_FC_ADAPTER_00.PRT

CAD FILENAME/LAYERS: M00853BA_DC_00B.PRT (1)

PANDUIT CORP. TINLEY PARK, ILLINOIS

MINI-COM FC FIBER OPTIC ADAPTER MODULE (CMFC** & CMFCZ**) CUSTOMER DRAWING

UNLESS OTHERWISE SPECIFIED, DIMENSIONAL TOLERANCES ARE:
(.X) ± .03 (.XXX) ± .005
(.XX) ± .01 ANGLES ± 1°

UNLESS OTHERWISE SPECIFIED, ALL DIMENSIONS ARE GIVEN IN INCHES, THIRD ANGLE PROJECTION.

DRAWN BY: TA
DATE: 04-17-00
CHK'D: AMYR
MAT'L: SEE NOTES
SCALE: NONE
DRAWING NO.: 00853-02
DWG SIZE: A