THIS COPY IS PROVIDED ON A RESTRICTED BASIS AND IS NOT TO BE USED IN ANY WAY DETRIMENTAL TO THE INTERESTS OF PANDUIT CORP.

PANDUIT P/N	WEIGHT
PZWIFIDCB	2.12 LB/EACH SET (961.6 g/EACH SET)

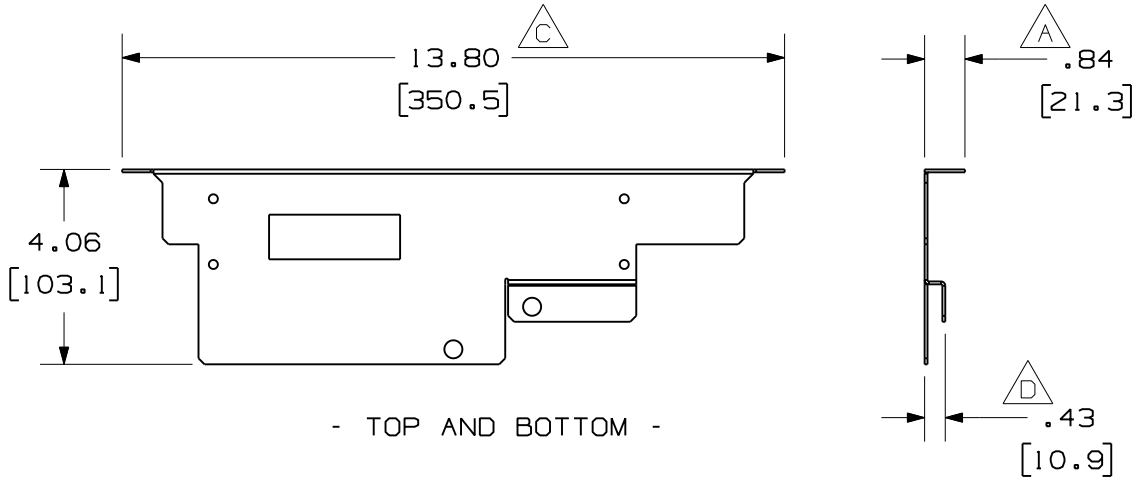

- TOP AND BOTTOM -

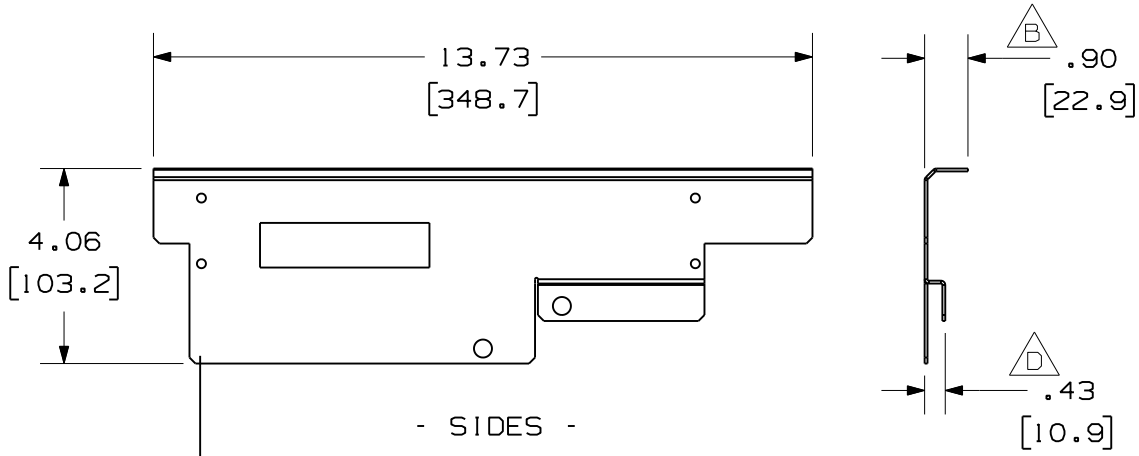

- SIDES -

NOTES:
1. VISIT OUR ON-LINE CATALOG AT WWW.PANDUIT.COM FOR A LIST OF CURRENT PARTS APPLICABLE FOR USE WITH THIS PRODUCT.
2. DIMENSIONS IN PARENTHESES ARE IN METRIC.
3. PART INCLUDES:
   2- CEILING BRACKET (TOP & BOTTOM)
   2- CEILING BRACKET (SIDES)
   16- #6-32 MOUNTING SCREW
4. DESIGNED FOR USE WITH THE FOLLOWING WIRELESS ACCESS POINT ENCLOSURES: PZWIFIED, PZWIFIEN, PZWIFIEA, PZWIFIEH, AND PZWIFIENA.
5. MATERIAL: ALUMINUM; POWDER COATED WHITE.

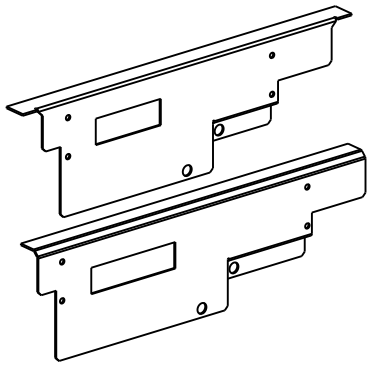

REV	DATE	BY	CHK	DESCRIPTION	ECN - R	CUST	SUP	OTH
02A	3-20-08	RYB		A. WAS .75; B. WAS .81; C. WAS 13.62; D. WAS .80	10311-17			
01	3-11-08	BAME		ADDED OFFSET MOUNT UPDATED NOTE 4 TO INCLUDE ALL ENCLOSURES FOR WHICH BRACKET IS DESIGNED.	10311-17			
00	8-23-05	RYB	RDC	RELEASED TO PRODUCTION	10311-17	BAS		

MODEL FILENAME: V10311BT/02.prt
DRAWING FILENAME: V10311BT_DC/02A.prt
SIZE: A

PANZONE™ WIRELESS ACCESS POINT ENCLOSURE CEILING BRACKETS (PZWIFIDCB)
CUSTOMER DRAWING

PANDUIT™ CORP.
TINLEY PARK, ILL 60477

THIRD ANGLE PROJECTION

ALL DIMENSIONS ARE GIVEN IN INCHES, UNLESS OTHERWISE SPECIFIED.
DIMENSIONAL TOLERANCES ARE:
(.X) ± (.XXX) ±.010(.3)
(.XX) ±.03(.8) ANGLES ±

DRAWN BY: Rey B
DATE: 8-23-05
CHK'D: RDC

MATERIAL: .063" 5052 ALUMINUM

I.I. NUMBER: N/A
PRODUCT SPEC: N/A
WORK INSTRUCTION: N/A
SCALE: NONE
PART NO.: PZWIFIDCB
DRAWING NO.: 10311-17