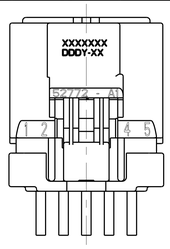

SUPPLEMENTARY VIEW
SHOWN W/O CPA
SEE P/N CHART
ALL DIMENSIONS SAME
AS WITH CPA VIEWS

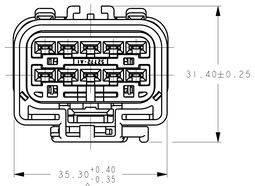

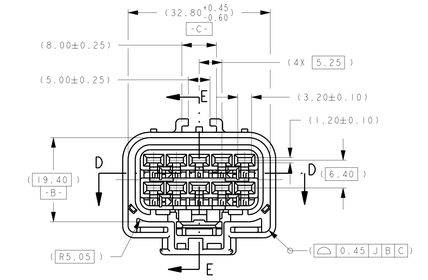

SECTION D-D

DETAIL W
4 PLACES
SCALE 5:1

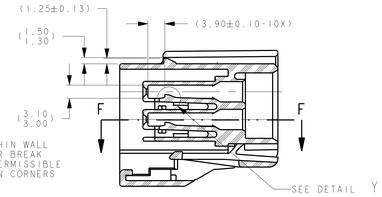

CAVITY DETAIL VIEW
SECTION E-E

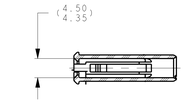

PARTIAL SECTION F-F

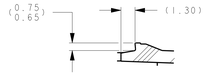

DETAIL Y
TERM LOCK FINGER
SCALE 5:1

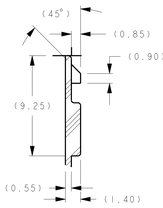

DETAIL Z
1 PLC. AS SHOWN
1 PLC. SYM. OPP.
SCALE 5:1

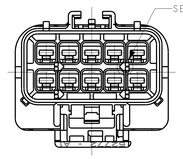

FOR REFERENCE ONLY

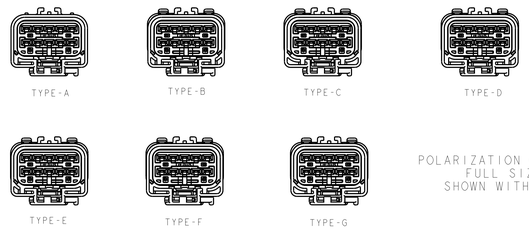

POLARIZATION OPTIONS
FULL SIZE
SHOWN WITH CPA

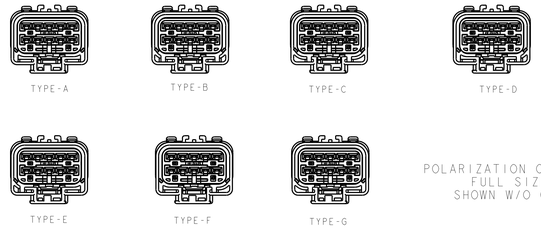

POLARIZATION OPTIONS
FULL SIZE
SHOWN W/O CPA

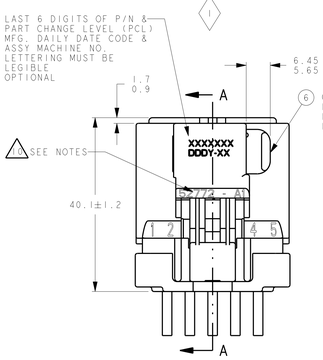

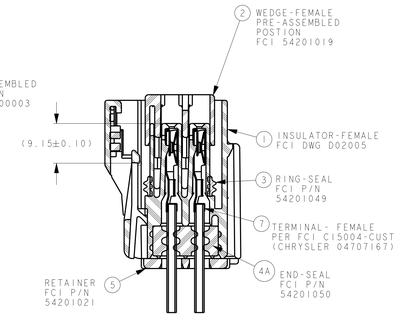

SECTION A-A

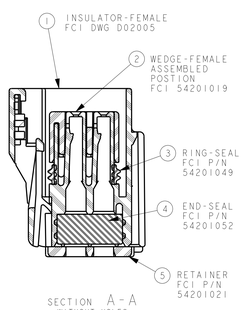

SECTION A-A
WITHOUT HOLES
SEE P/N CHART

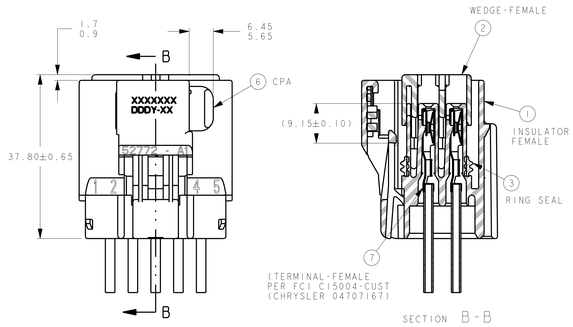

SECTION B-B

SEALED ASSEMBLY VIEW
SEE PART NUMBER CHART
*SHIPPED WITHOUT END SEAL AND RETAINER

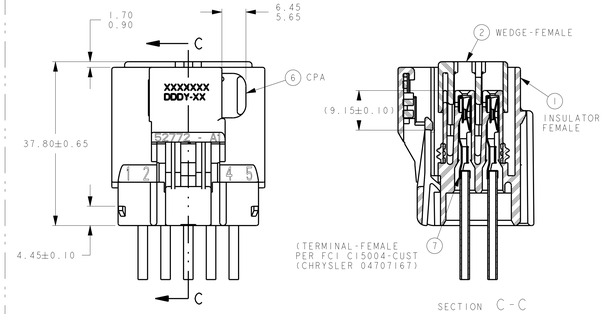

SECTION C-C

UNSEALED ASSEMBLY VIEW
SEE PART NUMBER CHART

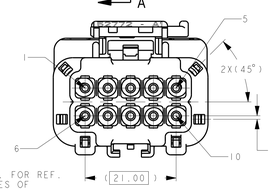

[CIRCUIT NOS. FOR REF.
SHOWN ON SIDES OF
PART]

MATING PART NUMBER CHART

INDEX TYPE	COLOR	SEALED/ UNSEALED	FCI	CUSTOMER	YNA	FCI	CUSTOMER	YNA
			FEMALE ASSEMBLY PART NUMBERS			MATING ASSEMBLY PART NUMBERS FOR REFERENCE ONLY		
G	LT BROWN	SEALED	54201043N	N/A	N/A	54201042	N/A	N/A
		SEALED	54201043	(C) 04868049AA	N/A	54201042	(C) 04868047AA	N/A
		SEALED	*54201063	N/A	N/A	DIRECT CONNECT APPLICATION INDEX G		
		SEALED	*54201065N	N/A	N/A	DIRECT CONNECT APPLICATION INDEX G		
F	AQUA	UNSEALED	54201005N	N/A	N/A	DIRECT CONNECT APPLICATION INDEX F		
		UNSEALED	54201005	(C) 04687905	7283-4809-90	DIRECT CONNECT APPLICATION INDEX F		
		SEALED	54201015N	N/A	N/A	DIRECT CONNECT APPLICATION INDEX F		
		SEALED	54201015	(C) 04687899	7283-4806-90	DIRECT CONNECT APPLICATION INDEX F		
E	DK GRN	UNSEALED	54201003N	N/A	N/A	DIRECT CONNECT APPLICATION INDEX E		
		UNSEALED	54201003	(C) 04687904	7283-4808-60	DIRECT CONNECT APPLICATION INDEX E		
		SEALED	54201013N	N/A	N/A	DIRECT CONNECT APPLICATION INDEX E		
		SEALED	54201013	(C) 04687898	7283-4805-60	DIRECT CONNECT APPLICATION INDEX E		
D	ORANGE	UNSEALED	54201004N	N/A	N/A	DIRECT CONNECT APPLICATION INDEX D		
		UNSEALED	54201004	(C) 04687903	7283-4807-50	DIRECT CONNECT APPLICATION INDEX D		
		SEALED	54201014N	N/A	N/A	DIRECT CONNECT APPLICATION INDEX D		
		SEALED	54201014	(C) 04687897	7283-4804-50	DIRECT CONNECT APPLICATION INDEX D		
C	DK GREY	SEALED	54201011N	N/A	N/A	DIRECT CONNECT APPLICATION INDEX C		
		SEALED	54201011	(C) 04801117	7229-2829-40	DIRECT CONNECT APPLICATION INDEX C		
		SEALED	*54201023N	N/A	N/A	DIRECT CONNECT APPLICATION INDEX C		
		SEALED	*54201023	(C) 04801112	7223-1609-40	DIRECT CONNECT APPLICATION INDEX C		
		SEALED	△F066900	N/A	N/A	DIRECT CONNECT APPLICATION INDEX C		
		SEALED	F071010	N/A	N/A	JOHN DEERE LITTLE FUSE LOAD CENTER		
	LT GRN	UNSEALED	54201002N	N/A	N/A	54201008	N/A	N/A
		UNSEALED	54201002	(C) 04687902	7223-1109-60	54201008	(C) 04687911	7222-1009-60
		SEALED	54201012N	N/A	N/A	54201018	N/A	N/A
		SEALED	54201012	(C) 04687896	7283-4803-60	54201018	(C) 04687908	N/A
		SEALED	*54201062	N/A	N/A	DIRECT CONNECT APPLICATION INDEX C		
		SEALED	*54201064N	N/A	N/A	DIRECT CONNECT APPLICATION INDEX C		
B	LT GREY	UNSEALED	54201001N	N/A	N/A	54201007	N/A	N/A
		UNSEALED	54201001	(C) 04687901	7283-4802-40	54201007	(C) 04687910	N/A
		SEALED	F961010	N/A	N/A	JOHN DEERE LITTLE FUSE LOAD CENTER		
		SEALED	54201010N	N/A	N/A	54201017	N/A	N/A
		SEALED	54201010	(C) 04687895	7283-4605-40	54201017	(C) 04687907	7282-4605-40
		SEALED	54201010	(C) 04687895	7283-4605-40	54201024	(C) 04688875	7282-4605-40
		SEALED	△F956900	N/A	N/A	DIRECT CONNECT APPLICATION INDEX B		
A	BLACK	UNSEALED	54201000N	N/A	N/A	54201006	N/A	N/A
		UNSEALED	54201000	(C) 04687900	7283-4606-30	54201006	(C) 04687909	N/A
		SEALED	54201009	(C) 04687894	7223-1605-30	54201016	(C) 04687906	7222-7406-30
		SEALED	*54201022N	(C) 04707443	7283-4801-30	54201016	(C) 04687906	7222-7406-30
		SEALED	*54201054	(C) 04759589AA	7283-4901-30	54201016	(C) 04687906	7222-7406-30
		SEALED	54201054	(C) 04759589AA	7283-4901-30	54201058	(C) 56045040AA	N/A
		SEALED	54201056N	N/A	7283-4608-30	54201016	(C) 04687906	7222-7406-30
		SEALED	△F856900	N/A	N/A	DIRECT CONNECT APPLICATION INDEX A		
		SEALED	54201051N	(C) 04707404	N/A	DIRECT CONNECT APPLICATION INDEX A		

(C) - CHRYSLER (F) - FORD
FCI - FRAMATOME CONNECTORS INTERNATIONAL
YNA - YAZAKI NORTH AMERICA
(JD) - JOHN DEERE (LF) - LITTLE FUSE

FCI	52772 OR 52772 H	SEE CHART
VENDOR	VENDOR CODE	CHRYSLER P/N

CHART - ASSEMBLY PART NUMBERS

FCI P/N'S	CUSTOMER P/N'S	YNA P/N'S	UNSEALED W/O CPA	UNSEALED W/CPA	SEALED W/CPA	SEALED W/O CPA
54201000N	(C) 04687900	7283-4606-30				
54201000	(C) 04687900	7283-4807-30				
54201009	(C) 04687894	7223-1605-30				
54201002N	(C) 04687902	7223-1109-60				
54201002	(C) 04687902	7223-1109-60				
54201004N	(C) 04687904	7283-4808-60				
54201004	(C) 04687904	7283-4808-60				
54201005	(C) 04687905	7283-4809-90				
△F956900	N/A	N/A				
54201010	(C) 04687895	7283-4605-40				
54201010N	N/A	N/A				
△F066900	N/A	N/A				
54201013	(C) 04687896	7283-4803-60				
54201013N	N/A	N/A				
54201014	(C) 04687897	7283-4804-50				
54201014N	N/A	N/A				
54201015	(C) 04687899	7283-4806-90				
54201015N	N/A	N/A				
54201017	(C) 04687907	7282-4605-40				
54201017N	N/A	N/A				
54201018	(C) 04687908	N/A				
54201018N	N/A	N/A				
54201022N	(C) 04707443	7283-4801-30				
54201024	(C) 04688875	7282-4605-40				
54201054	(C) 04759589AA	7283-4901-30				
54201054N	N/A	N/A				
54201056N	N/A	7283-4608-30				
54201058	(C) 56045040AA	N/A				
54201058N	N/A	N/A				
54201006	(C) 04687909	N/A				
54201006N	N/A	N/A				
54201016	(C) 04687906	7222-7406-30				
54201016N	N/A	N/A				
54201051N	(C) 04707404	N/A				
54201051	(C) 04707404	N/A				
54201052	(C) 04759589AA	7283-4902-30				
54201052N	N/A	N/A				
54201007	(C) 04687910	N/A				
54201007N	N/A	N/A				
54201008	(C) 04687911	7222-1009-60				
54201008N	N/A	N/A				
54201067	(F) 4G7V-99277-AA	N/A				
F961010	N/A	N/A				
F071010	N/A	N/A				
F856900	N/A	N/A				
F905900	N/A	N/A				
54201021			REQUIRED	REQUIRED	REQUIRED	REQUIRED
22AWG TO 10AWG (Ø1.50 TO Ø4.09)				SEE NOTES	PLUG	SEE NOTES

ITEM	(CUSTOMER P/N)	FCI P/N	PART NAME	MATERIAL
1	(C) 04687756	54201026	INSULATOR - FEMALE INDEX A; BLK	PA66 GF35
1	(C) 04687957	54201027	INSULATOR - FEMALE INDEX B; LT GRY	PA66 GF35
1	(C) 04687958	54201028	INSULATOR - FEMALE INDEX C; LT GRN	PA66 GF35
1	(C) 04801111	54201029	INSULATOR - FEMALE INDEX C; DK GREY	PA66 GF35
1	(C) 04687959	54201030	INSULATOR - FEMALE INDEX D; ORG	PA66 GF35
1	(C) 04687960	54201031	INSULATOR - FEMALE INDEX E; DK GRN	PA66 GF35
1	(C) 04687962	54201032	INSULATOR - FEMALE INDEX F; AQUA	PA66 GF35
1	(C) 04868048AA	54201033	INSULATOR - FEMALE INDEX G; LT BROWN	PA66 GF35
2	(C) 04687741	54201019	WEDGE FEMALE; ROYAL BLUE	PA66 GF35
3	(C) 04687736	54201049	RING SEAL; RED	SILICONE
4A	(C) 04687963	54201050	END SEAL; DK BLUE (INS. RANGE Ø 1.70 - Ø 3.35)	SILICONE
4C	N/A	C755900	END SEAL; WHITE (INS. RANGE Ø 1.90 - Ø 3.70)	SILICONE
4B	(!!/C 93008013)	54201052	END SEAL; BRIGHT YELLOW (NO HOLES)	SILICONE
5	(C) 04687750	54201021	RETAINER; BLACK	PA66 GF35
6	(C) 04687739	54200003	CPA LATCH; RED	PA66 GF35
3 3 3