# Wire and Cable, Harnessing and Protection Products

TE connectivity

## Markets Served

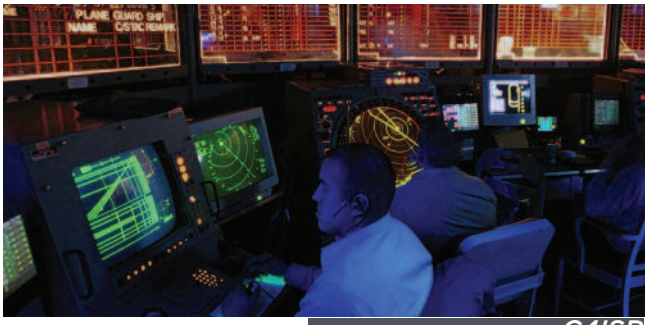

*C4ISR*

*Commercial Aerospace*

*Ground Defense*

*Military Aerospace*

*Military Marine*

*Missile Defense*

*Offshore / Civil Marine*

*Space*

**www.te.com/ADM**

## Table of Contents

**TE Connectivity Embraces the Most Valued Brand Names Worldwide** ..... ii
**About TE's Wire and Cable, Harnessing and Heat-Shrinkable Products** ..... iii
**How to Use this Catalog** ..... iv

**Application Overview**
Seal It ..... 1-1
Connect It ..... 1-2
Insulate It ..... 1-3
Protect It ..... 1-4
Wire It ..... 1-5
Hold It ..... 1-6
Join It ..... 1-7
Beautify It ..... 1-8
Reduce It ..... 1-9
Repair It ..... 1-10
Flex It ..... 1-11
All of It ..... 1-12

**Electrical Interconnection System Design**
HarnWare™ V6 ..... 2-2 to 2-7
Integrated Military Harness Systems ..... 2-8 to 2-18

**Product Sections**
Heat-Shrinkable Tubing ..... 3
Molded Parts ..... 4
Adhesives ..... 5
Adapters ..... 6
Assemblies ..... 7
Electrical Interconnect Products ..... 8
Wire and Cable ..... 9
Application Equipment ..... 10

**Supporting Information**
Equivalents and Conversions ..... 11-2, 11-3
Temperature Conversion ..... 11-3, 11-4
Glossary ..... 11-5 to 11-13
Part Index ..... 11-14 to 11-26



Catalog 1654025
Revised 3-13

www.te.com

Dimensions are shown for reference purposes only. Specifications subject to change.

Dimensions are in millimeters unless otherwise specified.

USA: +1 800 522 6752
Asia Pacific: +86 0 400 820 6015
UK: +44 800 267 666

For additional support numbers please visit www.te.com

## TE Embraces the Most Valued Brand Names Worldwide

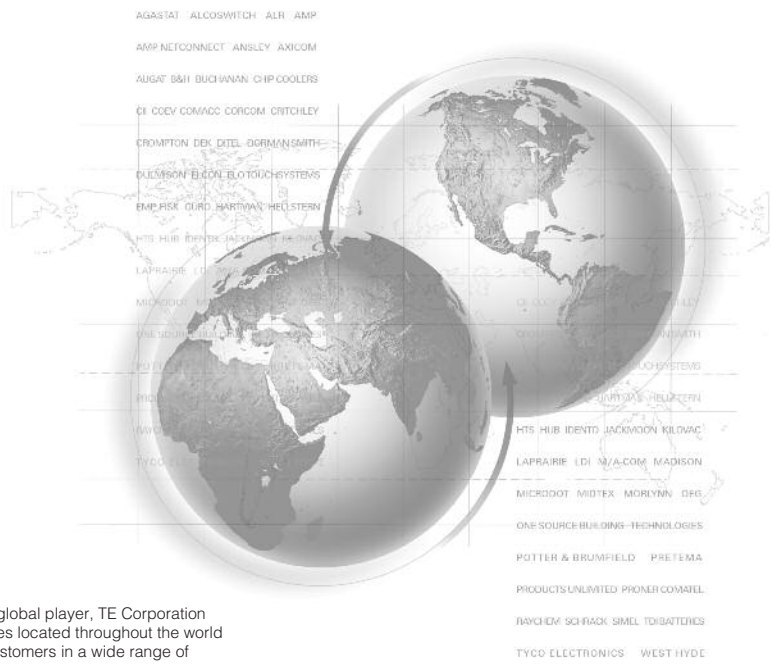


As a truly global player, TE Corporation has facilities located throughout the world serving customers in a wide range of applications.

Tyco Electronics Corporation was established in September 1999 and since then, the company has rapidly grown and strengthened its competencies as an electrical and electronic component supplier, with product offerings in 25 passive and active product segments.

The company has facilities located around the globe serving customers in the aerospace and defense, automotive, commercial electronics/ communications, industrial/energy, marine, medical, military, and rail industries. TE's product portfolio continues to grow, encompassing connector systems and application tooling, active and passive fiber optic devices, complete power systems, wireless components (including IC's, radar sensors, and complete communications systems), GPS and integrated antenna systems, heat-shrink products, circuit protection devices, magnetic components, wire and cable systems, touchscreens, PC boards and backplanes, smart cards, relays, sensors, electronic modules, wire harnessing and labeling products, battery packs, terminal blocks and switches.

A significant result of this continued growth, and a real benefit to customers, is that our technology leadership becomes even stronger. The synergies of expertise in materials science, product design, and process engineering, coupled with knowledgeable application engineers, sales representatives, and customer service personnel enables you to make your next generation of products successful.



Dimensions are shown for reference purposes only. Specifications subject to change.

Dimensions are in millimeters unless otherwise specified.

USA: +1 800 522 6752
Asia Pacific: +86 0 400 820 6015
UK: +44 800 267 666

For additional support numbers please visit www.te.com

## About TE Wire and Cable, Harnessing, and Heat-Shrinkable Products

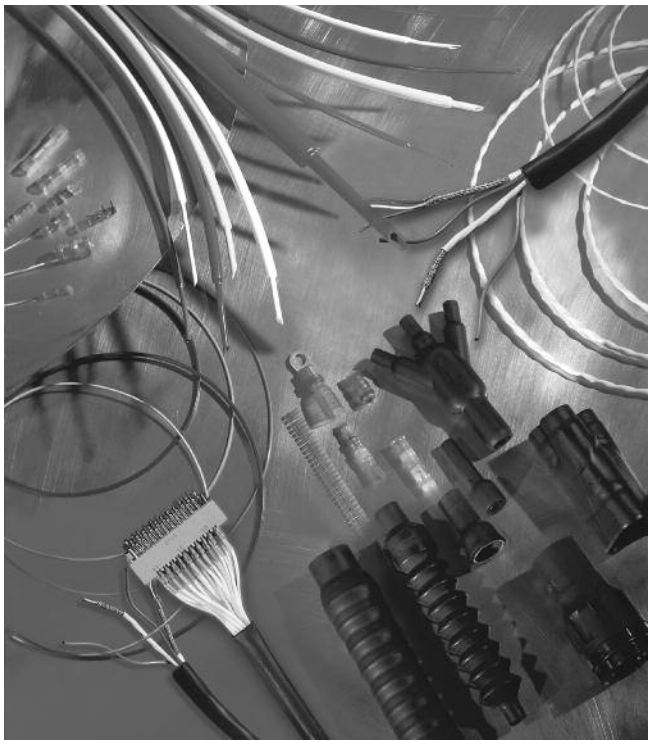

***TE's Raychem brand of products, pioneered the application of radiation crosslinking and the development of heat-shrinkable polymer tubing.***

TE's Raychem brand of heat-shrinkable polymer products is recognized worldwide. It is backed by a history of proven performance, reliability, innovation and superior quality. TE manufactures the world's largest range of heat-shrinkable tubing – tubing that provides cable protection offering exceptional insulation, mechanical protection, and strain relief. We are the recognized world leader in heat-shrinkable polymer technology.

A broad-based product line of wire and cable is engineered to meet or exceed the most rigorous technical specifications. Performing from -100°C to +260°C [-148°F to +500°F], the product line encompasses fire-resistant cable, small-size controlled electrical cables, multi-conductor cable, high-performance radiation crosslinked ETFE airframe wire, low fire hazard wire, high-performance automotive and commercial wire, and NASA-spec and other space-application types. Additionally, a variety of low-cost, easy-to-install components for wire harnesses and cable assemblies are available including splices, adapters, low-profile rectangular connectors, and contacts. These components are approved to widely recognized standards and specifications that include UL, SAE, MIL, Defense, DNV, Lloyds, and ABS.

TE also provides customized harnessing design supported by a pioneering software package, Harn*Ware*, which enables fast, optimum system design with materials and assembly labor estimates.

For over fifty years, customers have recognized the global capabilities of Raychem products. Combining these advanced products with superior technical support and a global sales/service organization, customers with worldwide operations count on TE to supply the knowledge and products they need to solve specific problems and help them take advantage of opportunity, anywhere it arises. This philosophy has earned TE a reputation for leadership in materials science technologies. Developed from these technologies, Raychem brand products are sold into many industries including aerospace, automotive, electronics, construction, electrical power, utilities, manufacturing, pipeline, process, rail and mass transit, and telecommunications.



Catalog 1654025
Revised 3-13

www.te.com

Dimensions are shown for reference purposes only. Specifications subject to change.

Dimensions are in millimeters unless otherwise specified.

USA: +1 800 522 6752
Asia Pacific: +86 0 400 820 6015
UK: +44 800 267 666

For additional support numbers please visit www.te.com

## How To Use This Catalog

**This catalog has four main sections:**

- Application Overview
- Electrical Interconnection System Design
- Products
- Supporting Information

**Application Overview** (Section 1) presents general design ideas based on typical uses for Raychem-brand wire and cable, heat-shrinkable tubing and protection products. Application photos depict examples of how customers use our products to enhance the performance and improve the reliability of their specific products in one or more of these generic applications; Seal It, Connect It , Wire It, Insulate It, Protect It, Hold It, Join It, Beautify It, Reduce It, Repair It, Flex It, All of It.

**Electrical Interconnection System Design** (Section 2) describes wire harness components and harness protection issues and provides a step-by-step guide to selecting the right components for a particular wire harnessing system.

**Products** (Sections 3-10) showcases our product groups. Each section provides:

- An **overview** of the product group.
- A **table of contents** that lets you see at a glance the product families in that product group.
- A **selection guide** to help you determine which product family will satisfy the requirements of your application.
- An explanation of the **part numbering system** for that product group.
- **Information pages** on each product family.

The product information pages provide some or all of the following information (depending on the product family):

- Typical applications for the product family.
- Product features/benefits.
- Abbreviated installation guidelines.
- Specifications and agency approvals.
- Part number selection information.
- Product data (dimensions, properties, and materials).
- Ordering information.
- Location availability.

**Supporting Information** (Section 11) provides:

- Equivalents and conversion tables.
- Temperature conversion table.
- Glossary.

## Seal It

***Advanced materials and product design have resulted in a complete line of products offering the most effective sealing available today: adhesive-lined tubing, molded parts, and a variety of solder and crimp connection devices. These easy-to-use products provide superior waterproofing, resistance to hydrocarbons and other chemicals, protection against corrosion and oxidation, and a barrier against dust and dirt.***

- Heat-shrinkable, adhesive-lined products—tubings with high shrink ratios, and molded parts—environmentally protect connector-to-cable transitions.
- Waterblocked and anticapillary wire prevent water and most fluids from wicking between the conductor strands. Bundle sealing products block multiconductor cables.
- Adhesive-lined, heat-shrinkable tubing and end caps seal and protect electronic components and in-line wire splices from fluids, moisture, and corrosion while also providing strain relief.
- Heat-shrinkable caps lined with an adhesive or encapsulant form a moisture-resistance barrier around stub splices and wire ends.
- Heat-shrinkable, moisture blocking systems are designed to provide reliable sealing of wire bundles preventing fluid ingress.





Catalog 1654025
Revised 3-13

www.te.com

Dimensions are shown for reference purposes only. Specifications subject to change.

Dimensions are in millimeters unless otherwise specified.

USA: +1 800 522 6752
Asia Pacific: +86 0 400 820 6015
UK: +44 800 267 666

For additional support numbers please visit www.te.com

## Connect It

***TE's electrical interconnect products offer reliable, more cost-effective alternatives to traditional connection methods—such as hand soldering, or crimping and then insulating by taping or overmolding.***

With our electrical interconnect products, you start with a precisely engineered, fluxed solder preform inside a transparent, heat-shrinkable sleeve. When the product is heated, the solder preform melts, and the sleeve shrinks to create a connection that is fully insulated and strain-relieved.

This ease of use expands your options even as it enhances the quality of your end product, as in these applications:

- Easy and reliable termination of EMI shields to ground, ensuring effective EMI attenuation. Shield termination products are available for computer, data, and instrumentation cable, communications and video cable, and heavy industrial cable.
- Splicing of one component to another, such as a diode connected to one end of a LED.
- Coaxial terminations to PCBs and terminals.

## Insulate It

***Solving an insulation problem can be easier than you think, especially when you consider the family of Raychem brand products from TE that can provide superior alternatives to standard methods of insulation such as hand-taping or molding-in-place.***

- When heated during installation, our radiation-crosslinked tubings shrink to conform to a variety of shapes, providing dependable insulation.
- Heat-shrinkable end caps insulate wire or cable terminations, providing protection from dust and dirt. End caps with adhesive or encapsulant linings also provide protection from moisture because the lining, when heated, melts and flows to fill surface irregularities of the substrate.
- General-purpose polyolefin tubing is widely used to insulate and strain-relieve wire terminations and connections.
- Delicate electrosurgical instruments can be insulated and protected from abrasion by using one of TE's medical-grade, heat-shrinkable tubings specially formulated to meet the requirements of USP Class VI for medical use.
- Components on a PCB, such as capacitors and fuses, can be insulated with a UL VW-1-approved heat-shrinkable tubing to achieve a specific product rating.





Catalog 1654025
Revised 3-13

www.te.com

Dimensions are shown for reference purposes only. Specifications subject to change.

Dimensions are in millimeters unless otherwise specified.

USA: +1 800 522 6752
Asia Pacific: +86 0 400 820 6015
UK: +44 800 267 666

For additional support numbers please visit www.te.com

## Protect It

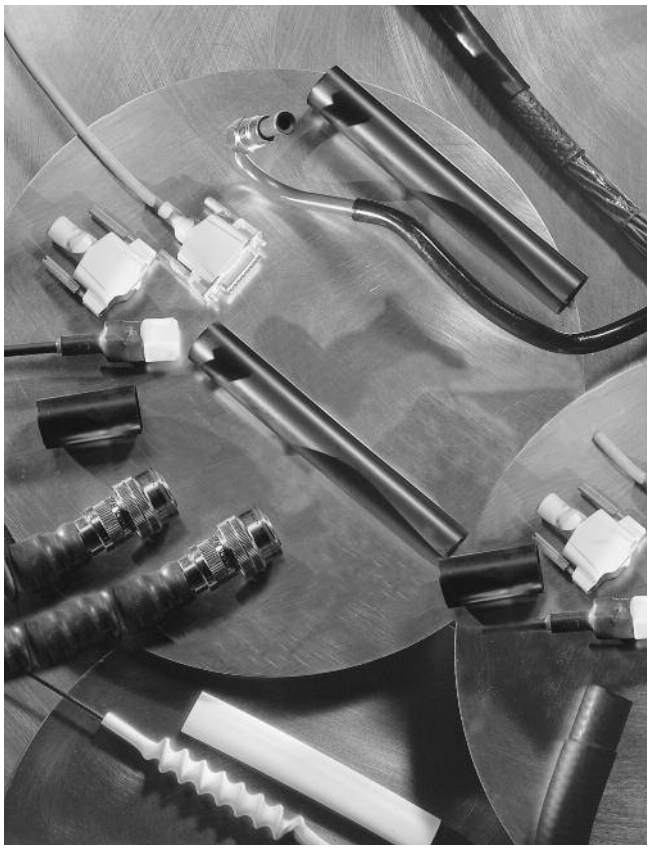

***Designing a brilliant solution is good. Protecting a brilliantly designed solution is even better. A whole family of protection products, made from a wide variety of materials, can provide comprehensive protection: mechanical protection, strain relief, resistance to abrasion and crushing, EMI and noise reduction, fluid resistance, and thermal insulation.***

- Tinel-Lock ring braid terminations can be used for applications where shielding is critical. These shape-memory-metal products attach metal braid shields to back-shells and provide 360° protection against EMI and EMP.
- Heat-shrinkable tubings provide mechanical protection for hoses and pipes, and also reduce problems caused by wire chafing or cable abrasion.
- Easy-to-install heat-shrinkable tubing and molded parts provide excellent strain relief and electrical insulation for connector-to-cable transitions.
- A heat-shrinkable molded part can relieve the strain on a multiconductor cable to a D-subminiature connector.
- Heat-shrinkable feedthroughs relieve the strain on cables entering junction boxes.
- Highly-flexible, heat-shrinkable fabric tubing provides outstanding abrasion protection for components such as rubber hoses, plastic pipes, and harness wiring bundles, recovering easily even over awkward substrates such as bent hoses.
- Heat-shrinkable MicroFit tubing is used to provide insulation and strain relief for fine-gauge wire (24 to 42 AWG) and fiber optic cables in such end products as medical devices, computers, communications equipment, and commercial electronic products.



Dimensions are shown for reference purposes only. Specifications subject to change.

Dimensions are in millimeters unless otherwise specified.

USA: +1 800 522 6752
Asia Pacific: +86 0 400 820 6015
UK: +44 800 267 666

For additional support numbers please visit www.te.com

## Wire It

***TE is a leader in the development of high-performance wire and cable products for demanding applications, including aerospace, industrial equipment, instrumentation, marine, and automotive applications. Precision extrusion capability, materials expertise, and design knowledge provide wire products that are lightweight; smaller than comparable-performance constructions; highly flexible, yet mechanically tough; flame-retardant and resistant to a variety of industrial fluids.***

All TE products offer outstanding shop-handling characteristics for efficient stripping, wire termination, and bundling. Cable design software is available to create custom multicore cables with unique components, tough but lightweight jacket materials, and optimized shielding. TE can also design complete wiring harnesses for industrial or military applications.

- The FlexLite family of hookup wire provides economical alternatives to fluoropolymers, silicones, and crosslinked polyethylene insulations for applications such as motors, appliances, and lighting, and for applications where thinner walls are needed because of space constraints.
- Raychem brand of high-temperature, dual-wall or single-wall aerospace wire saves space and weight on both military and commercial aircraft and space vehicles.
- Low-fire-hazard primary wires and cable are made from halogen-free, low-smoke materials with a low toxicity index. They offer increased safety, with reduced size and weight, over traditional materials in mass transit and similar applications.



Catalog 1654025
Revised 3-13

www.te.com

Dimensions are shown for reference purposes only. Specifications subject to change.

Dimensions are in millimeters unless otherwise specified.

USA: +1 800 522 6752
Asia Pacific: +86 0 400 820 6015
UK: +44 800 267 666

For additional support numbers please visit www.te.com

## Hold It

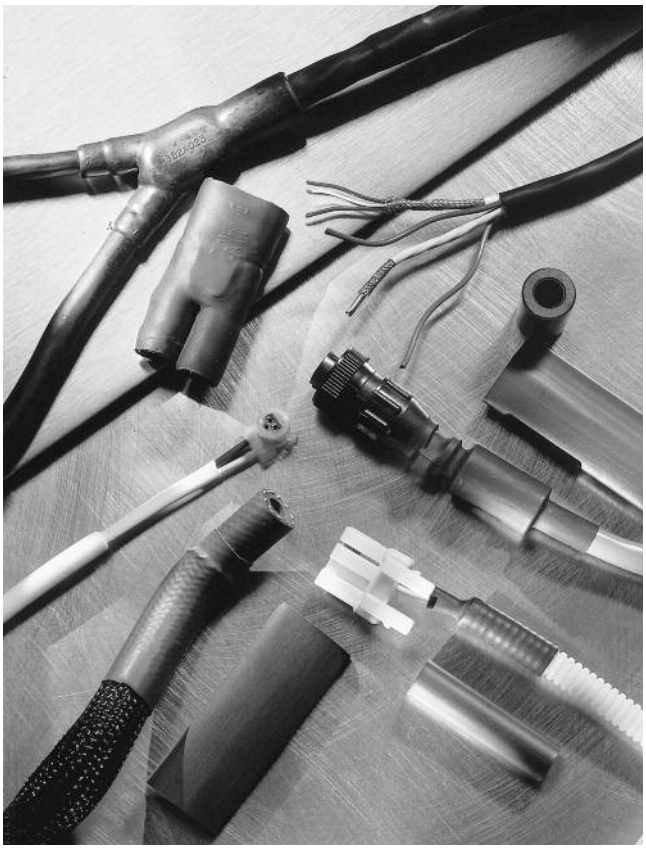

***To help you arrive at the best way to securely hold and position a component, take a look at the TE family of products and consider the many ways that you can use them: to keep components in place, bundle and route wires, create a formed shape for potting, or package components securely before final assembly.***

- Thin-wall tubings allow bundling of wires to create very flexible, lightweight harnesses that can withstand harsh environments.
- Fiber and/or copper wire components can be bundled for a custom multicore cable.
- Cable legs can be held together with a Y-transition molded part.
- Multicore and film-bonded cables hold wires together and can also provide EMI protection.
- Tubing can hold a covering (braid or convoluted tubing) onto a substrate.
- Two components (such as a resistor and fuse) can be held together as a package by enclosing them with heat-shrinkable tubing.
- Heat-shrinkable fabric tubing will grip substrates, such as harnesses, tightly to provide secure wire bundles without additional fixing.



Dimensions are shown for reference purposes only. Specifications subject to change.

Dimensions are in millimeters unless otherwise specified.

USA: +1 800 522 6752
Asia Pacific: +86 0 400 820 6015
UK: +44 800 267 666

For additional support numbers please visit www.te.com

## Join It

***When you have a mechanical connection to make, consider the uniform circumferential recovery force of heat-shrinkable tubing and metals in your designs.***

- Join two dissimilar materials, such as a rubber flapper to the end of a nylon tube, or the handle of a medical instrument to the instrument's moving parts.
- Assemble a bellows by covering a spring with heat-shrinkable tubing.
- Use Tinel ring adapters to provide the even circumferential force necessary to attach a metal braid shield to a backshell.
- Clear, adhesive-lined tubing connects water tubes in appliances to provide a rugged and aesthetically appealing joint which is also inspectable.
- Heat-shrinkable tubing is used to join polyester cords to heddles in Jacquard weaving loom harnesses.



Catalog 1654025
Revised 3-13

www.te.com

Dimensions are shown for reference purposes only. Specifications subject to change.

Dimensions are in millimeters unless otherwise specified.

USA: +1 800 522 6752
Asia Pacific: +86 0 400 820 6015
UK: +44 800 267 666

For additional support numbers please visit www.te.com

## Beautify It

***Enhancing the appearance of your brilliantly designed solutions couldn't be easier, when you use TE products.***

- Heat-shrinkable tubing—instead of tape—can create a smooth covering with no loose ends.
- Hot-stamp foils (gold or silver) can attractively showcase a company logo.
- Heat-shrinkable tubing can cover the mechanical attachment of one part to another.
- Tubing can attractively cover a metal railing, such as the type used for crowd control.
- Tubing can be color-matched to the original color of fiber, wire insulation, or other components to enhance the appearance of the final product.
- Handles of a variety of tools can be covered with colorful, heat-shrinkable tubing to enhance the appearance of the final product.



Dimensions are shown for reference purposes only. Specifications subject to change.

Dimensions are in millimeters unless otherwise specified.

USA: +1 800 522 6752
Asia Pacific: +86 0 400 820 6015
UK: +44 800 267 666

For additional support numbers please visit www.te.com

## Reduce It

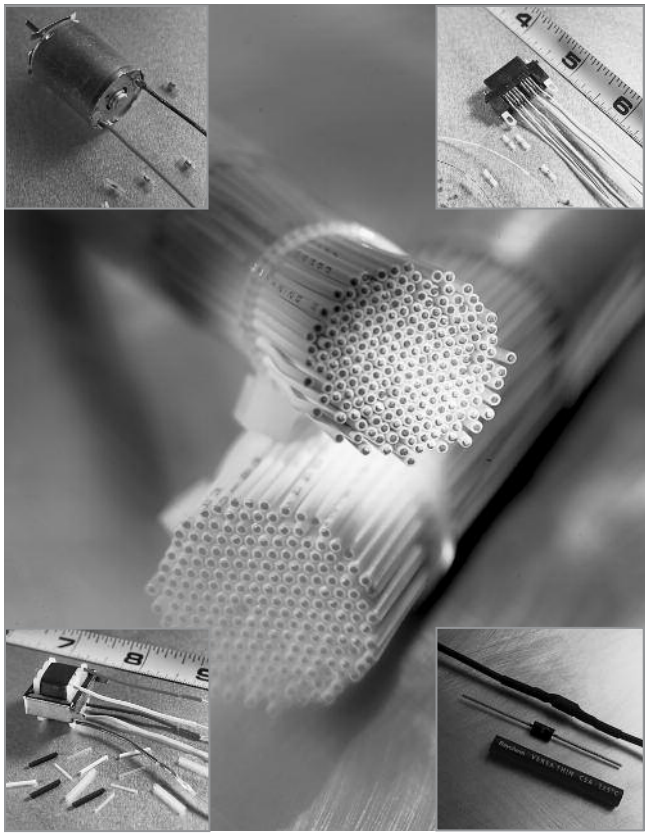

***With the trend toward miniaturization and higher-density interconnections, products developed for commercial electronics applications must downsize as well.***

- SolderSleeve devices feature a one-step controlled solder process for splicing and terminating wires down to 36 AWG—a method that is more reliable and less craft-sensitive than hand-soldering.
- TE can reliably produce primary wire insulations as thin as 4 mils. Our design software optimizes component placement and shielding to produce small, lightweight custom multicore cables. These cables can offer size and weight reductions that can range from 10 to 40 percent vs. comparable-performance constructions of primary wire or cable.





Catalog 1654025
Revised 3-13

www.te.com

Dimensions are shown for reference purposes only. Specifications subject to change.

Dimensions are in millimeters unless otherwise specified.

USA: +1 800 522 6752
Asia Pacific: +86 0 400 820 6015
UK: +44 800 267 666

For additional support numbers please visit www.te.com

## Repair It

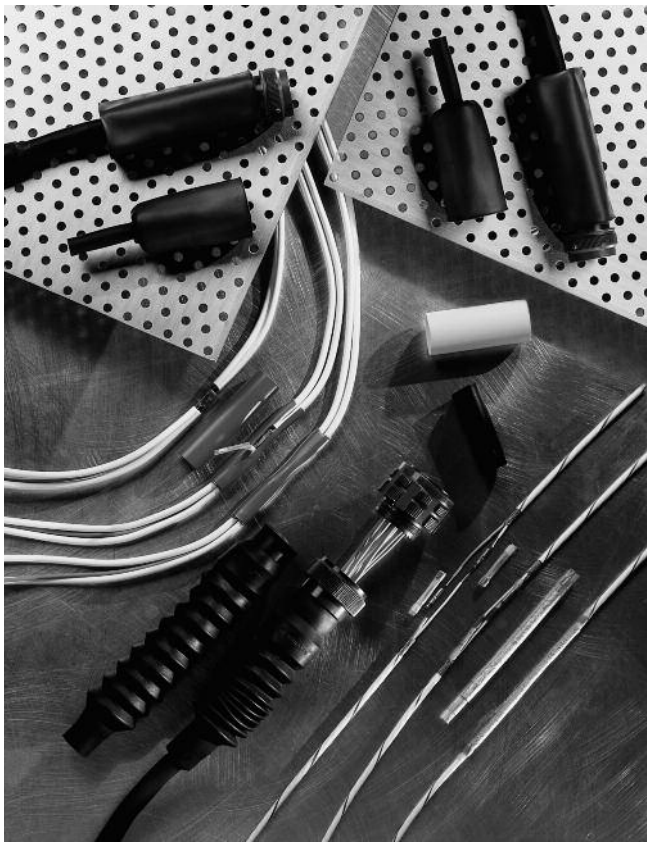

***Whether for repair or retrofitting, TE offers a whole family of Raychem brand products that can provide flexible, cost-effective solutions. For example, most failures in electrical wiring harnesses occur within the first six inches of the connector. Raychem brand products make repairs in this area more reliable, long-lived, and cost-effective.***

- High-shrink-ratio tubing can be slipped over the connector without depinning to reinsulate or strain relieve the connector-to-cable transition.
- SolderShield repair splice kits provide the components necessary to splice shielded single-wire or multicore cables.
- Adapters and Uniboot molded parts can be combined to allow reentry to the back of the connector area for pin repair.
- Splash-resistant SCL semirigid heat-shrinkable tubing, with its meltable inner wall, can be stripped off the substrate without leaving a sticky residue, thus providing access to connections requiring reentry.
- Flexible, adhesive-lined tubing can be used to repair damaged wire insulation, providing a moisture seal that is resistant to bending of the wire substrate.



Dimensions are shown for reference purposes only. Specifications subject to change.

Dimensions are in millimeters unless otherwise specified.

USA: +1 800 522 6752
Asia Pacific: +86 0 400 820 6015
UK: +44 800 267 666

For additional support numbers please visit www.te.com

## Flex It

***In applications where flexibility or flex life are important, TE products meet the need — many performing even at low temperatures.***

- NT tubing, which is widely used for insulation, strain relief, and abrasion protection on cable harnesses and wire bundles, remains flexible at low temperatures (as low as -70°C [-94°F]) without cracking.
- Hi-Flex heat-shrinkable tubing was developed specifically for sealed cable-jacketing applications where cable flexibility is an important concern. It is also ideal for situations where the cable is subject to motion, such as in industrial machinery, transportation equipment, robotics, and welding.
- For applications where a flexible 90° bend right after the connector is desired, Uniboot molded parts can provide the perfect fit.
- DynaLink wire and cable is designed specifically for applications where flex life is critical: in the robotics industry; in lifts, typing machines, and sewer inspection equipment; and on ships where wire must be capable of unwinding from a large cable reel and then retracting smoothly without strain.





Catalog 1654025
Revised 3-13

www.te.com

Dimensions are shown for reference purposes only. Specifications subject to change.

Dimensions are in millimeters unless otherwise specified.

USA: +1 800 522 6752
Asia Pacific: +86 0 400 820 6015
UK: +44 800 267 666

For additional support numbers please visit www.te.com

## All of It

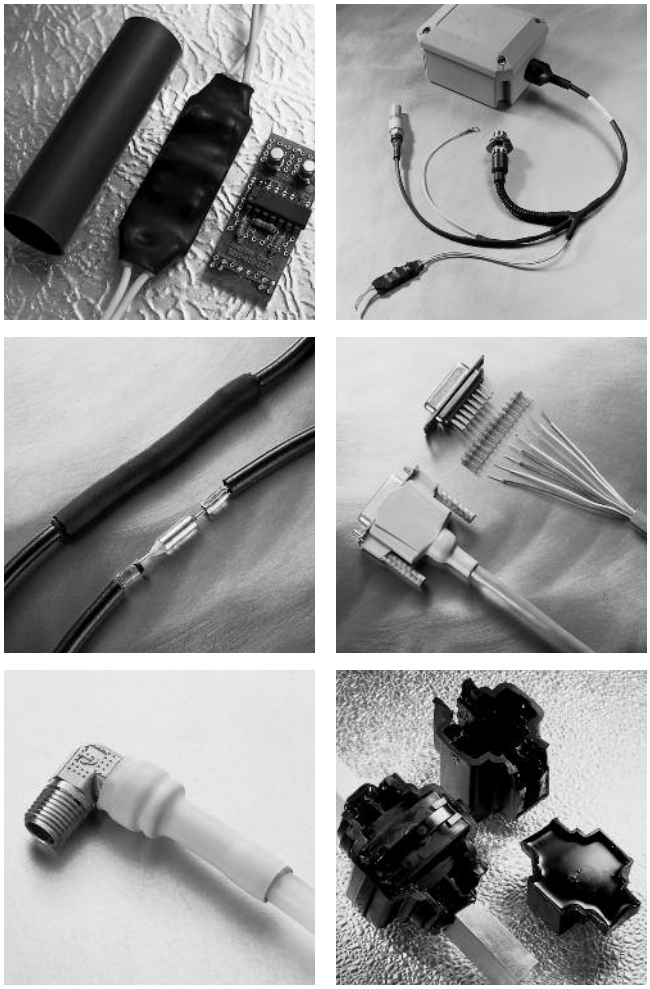

***At TE, we like the word "multitasking." So it should come as no surprise that our products are designed to help you integrate several tasks—seal, connect, insulate, protect, wire, hold, join, beautify, reduce, repair, and flex.***

In the pages of this catalog, you will find literally hundreds of products designed to provide thousands of solutions—across a wide variety of industries.

Although you will find the catalog features an extensive array of products, keep in mind that, at TE Connectivity, we're always coming up with new ideas and new products—so that we can help you put together the precise solution you need. Also, when you choose any Raychem brand product, you're automatically backed by a nationwide network of sales engineers who can provide application and engineering assistance as well as on-site training.



Dimensions are shown for reference purposes only. Specifications subject to change.

Dimensions are in millimeters unless otherwise specified.

USA: +1 800 522 6752
Asia Pacific: +86 0 400 820 6015
UK: +44 800 267 666

For additional support numbers please visit www.te.com

## Table of Contents

**HarnWare™ V6** . . . . . .2-2 to 2-7
**Integrated Military Harness Systems** . . . . . .2-8 to 2-18

This section attempts to provide assistance with most of the considerations applicable to the design of cable and harness assemblies. Caution must be used to ensure that the design is appropriate for a particular application.

TE Connectivity provides this information as a design aid and assumes no responsibility for and makes no representation regarding the suitability of a design for a specific application.

**Note:** Users should independently evaluate the suitability of the product for their application. Before ordering, check with TE for most current data.





Catalog 1654025
Revised 3-13

www.te.com

Dimensions are shown for reference purposes only. Specifications subject to change.

Dimensions are in millimeters unless otherwise specified.

USA: +1 800 522 6752
Asia Pacific: +86 0 400 820 6015
UK: +44 800 267 666

For additional support numbers please visit www.te.com

## HarnWare™ V6

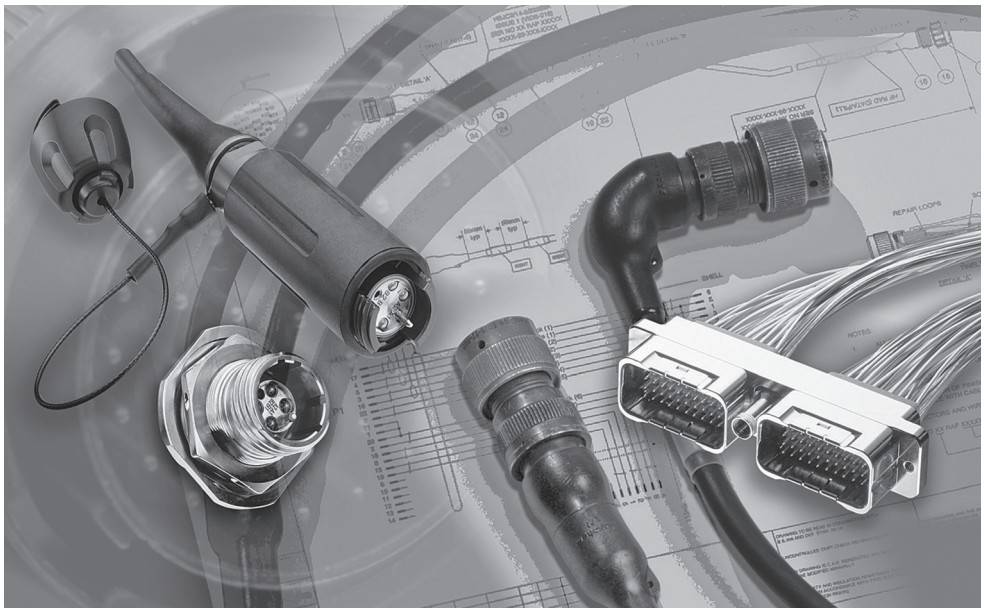

### Computer Aided Electrical Wiring Harness Design Software

#### Introduction

A new version of TE Connectivity's (TE's) popular harness design software has been re-engineered using the latest Microsoft programming tools to offer improvements in performance and enhance the user interface. Additional improvements include new product ranges added to the database, which now includes over 100,000 TE products and several thousand military standard connectors. The HarnWare™ design wizard also has a more modern appearance and includes hyperlinks to relevant product information.

The HarnWare™ computer-aided design package enables users to produce high-quality wiring harness assembly drawings, parts lists/bill of materials, labor estimates, RoHS compliance codes for each component, cable cross-section designs, connector planform drawings, wiring schematics and schedules. Data can also be exported in a variety of formats to allow transfer of information into other computer systems.

TE's extensive product ranges and systems approach to harness design provide complete harness solutions to meet the requirements of most markets, especially demanding applications in the defence, rail, aerospace, naval and motor sport industries.

The HarnWare™ software utilises a drag and drop drawing interface that enables the designer to rapidly draw and designate the overall parameters of the harness. This drawing combines with the HarnWare™ software to guide the designer through a series of design operations. The harness system can be specified and a range of fully compatible components can be selected.

#### Features

- Compare Design.
- Updated COP Listing.
- Materials and Equipment Listing.
- Extended User Parts Library editable by users.
- Improved export of Parts Listing.
- Create Shape Function.
- Fiber Optic Module including PRO BEAM Connectors.
- Database File Path Selection for Drawing Translator, User Parts Library and Weights.
- Users can supplement the databases of preferred parts by adding other component data into the HarnWare™ User Parts Library.

#### Benefits

- More detailed and accurate design with the use of preferred parts, helping provide best delivery and price.
- Designs and quotations produced up to 20 times faster.
- Promotes a systems approach for choosing components, materials, adhesives, etc to help confirm parts are compatible with the intended service conditions and with mating parts.
- More cost effective designs, minimised transcription errors and a more disciplined approach to harness design.



Catalog 1654025
Revised 3-13

www.te.com

Dimensions are shown for reference purposes only. Specifications subject to change.

Dimensions are in millimeters unless otherwise specified.

USA: +1 800 522 6752
Asia Pacific: +86 0 400 820 6015
UK: +44 800 267 666

For additional support numbers please visit www.te.com

## HarnWare™ V6 (Continued)

### Computer Aided Electrical Wiring Harness Design Software

**New Products Included in Version 6**

- Micro Heat Shrink Moulded Parts.
- Spin-Lock Adaptors.
- STXR Adaptors.
- ADK Rectangular Backshells.
- Soldertact Contact Devices.
- RF Connectors including TNC, BNC and N Type
- GPR Rectangular Connectors.
- AMPLIMITE Rectangular Connectors.
- VG95218 Pt 28 Multicore Cables.
- RG Coaxial Cables.
- D-SCE Range of Identification Sleeves.
- RT-780 Heat Shrink Tubing.

**HarnWare™ V6**

Since the introduction of the HarnWare™ software V1 in December 1995 many key changes and new features have been introduced. Version 6 of the software contains design modules for heat shrink sealed systems, conduit systems, 1553 data bus and fiber optical assemblies. The new V6 version gives a smarter, faster, better solution for harness design and component selection.

**System Specifications**

Microsoft Visio: For HarnWare™ software V6 Visio 2007 or 2010 software can be used. Only the 32 bit versions of Visio are supported for use with HarnWare™.

Microsoft Windows: HarnWare™ software is compatible with the 32 bit versions of Windows XP Service Pack 3, Windows Vista Service Pack 1 and Windows 7. It is also compatible with the 64 bit version of Windows 7.





Catalog 1654025
Revised 3-13

www.te.com

Dimensions are shown for reference purposes only. Specifications subject to change.

Dimensions are in millimeters unless otherwise specified.

USA: +1 800 522 6752
Asia Pacific: +86 0 400 820 6015
UK: +44 800 267 666

For additional support numbers please visit www.te.com

## HarnWare™ V6 (Continued)

### Computer Aided Electrical Wiring Harness Design Software

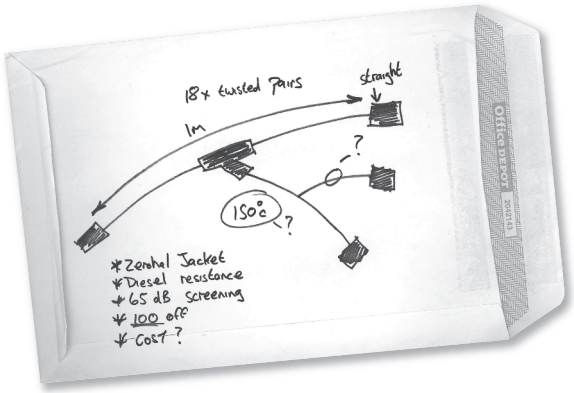


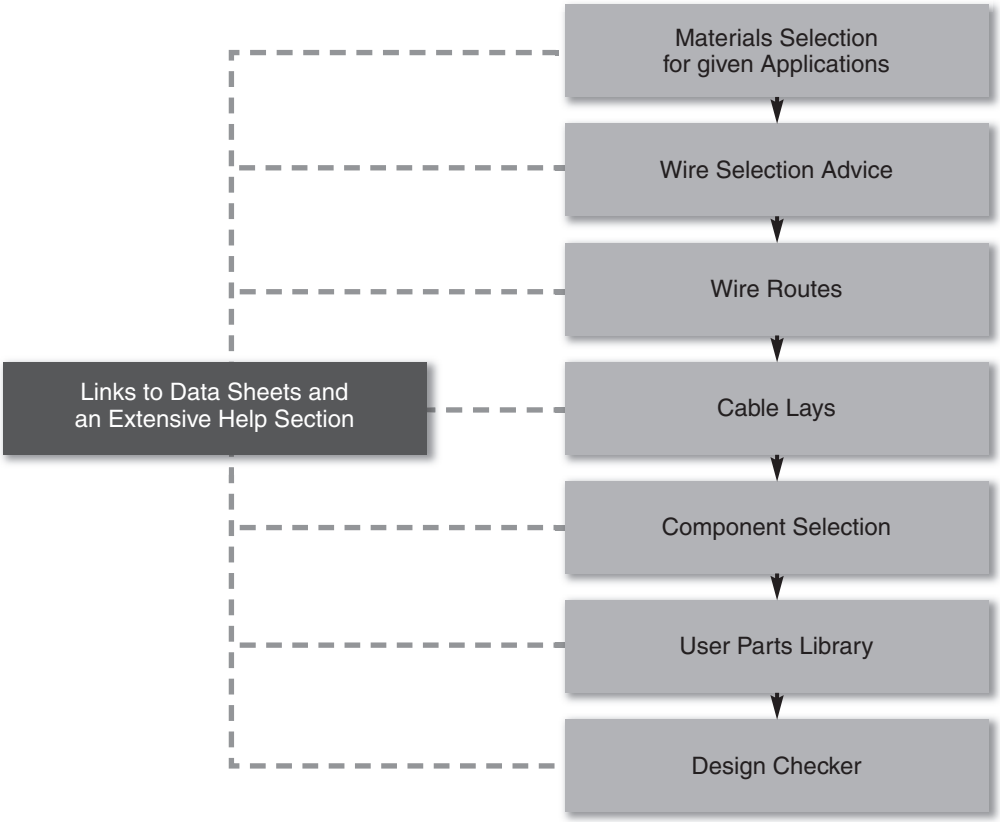


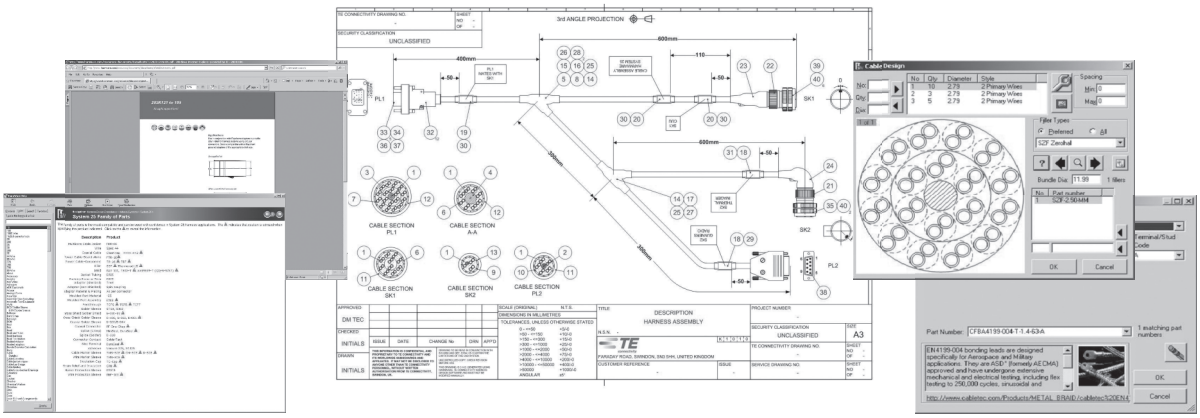



Dimensions are shown for reference purposes only. Specifications subject to change.

Dimensions are in millimeters unless otherwise specified.

USA: +1 800 522 6752
Asia Pacific: +86 0 400 820 6015
UK: +44 800 267 666

For additional support numbers please visit www.te.com

## HarnWare™ V6 (Continued)

### Computer Aided Electrical Wiring Harness Design Software

**Export Parts List**
Export Parts List menu options allow parts lists contained in the current Visio document or a selected set of documents to be exported to the Windows clipboard or a text file. This data can then be used in a spread sheet, database.

**Codes of Practice**
HarnWare™ can list the Codes of Practice (COPs) TE uses to support its harnessing products including information on laying wires, shrinking tubing/moulded parts and terminating connectors.

**Export Wiring Data to ATE**
HarnWare™ forms allow data such as connectivity, connector references and contact references to be exported to a text file or to the Windows Clipboard. This data can then be used in other systems, for example, automatic test equipment or other electrical design software.

**Export Marker Data to TE Wintotal Software System**
A Marker Sleeve page can be generated in Microsoft Visio software and or cable marker text and formatting details can be generated in an '.xmt' or COMMS file that is suitable for import into the TE WinTotal labelling software.

**Labor Estimates**
HarnWare™ will total up the assembly times for all of the products in a harness, selected by using the database, and output a grand total. The labor estimate sheet, that forms part of the HarnWare™ document package, works like a spread sheet, and the times and labor rates within it can be adjusted to suit local conditions.

**Tooling and Equipment**
The HarnWare™ Materials and Equipment option analyses the drawing and wire list. Materials and equipment that are relevant to the parts contained in the harness design are listed based on TE Codes of Practice.

**RoHS Listing**
The HarnWare™ Restriction on Hazardous Substances (RoHS) Codes option analyses the parts referenced in the drawing and wire list. A list of RoHS compliance codes for each part can be added to a page in the Visio document

**Weight Estimates**
The HarnWare™ Weight option provides a means of estimating the weight of a harness. Where component weight data is not available, users can add the relevant data to the database.

**Composite Weights and Parts Lists**
This option generates a composite parts or weights list for a number of drawings.

**Design Comparison**
This option is initiated from the HarnWare™ Tools menu and is used to analyse the changes between two Visio design documents, typically two different revisions of a harness design or two similar designs.





Catalog 1654025
Revised 3-13

www.te.com

Dimensions are shown for reference purposes only. Specifications subject to change.

Dimensions are in millimeters unless otherwise specified.

USA: +1 800 522 6752
Asia Pacific: +86 0 400 820 6015
UK: +44 800 267 666

For additional support numbers please visit www.te.com

## HarnWare™ V6 (Continued)

### Computer Aided Electrical Wiring Harness Design Software

The HarnVis™ 3D harness design visualisation system offers automatic generation of to-scale 3D models of wiring harnesses and components. These 3D models provide “virtual prototypes” of harnesses allowing the user to see the harness with lengths, diameters and parts shown to-scale. By simply clicking on a part, the user can access such data as part numbers, materials, finishes, adhesives, etc.

These “virtual prototypes” reduce the potential for errors, harness lay-up boards (also known as nail, form and peg boards) can be modelled and pegs can be automatically positioned along the harness legs. When a long harness leg makes it necessary, legs can be bent to fit a lay-up board.

3D models of harnesses and of many TE parts can be exported from the HarnVis™ system in the form of IGES files for use in other CAD systems.

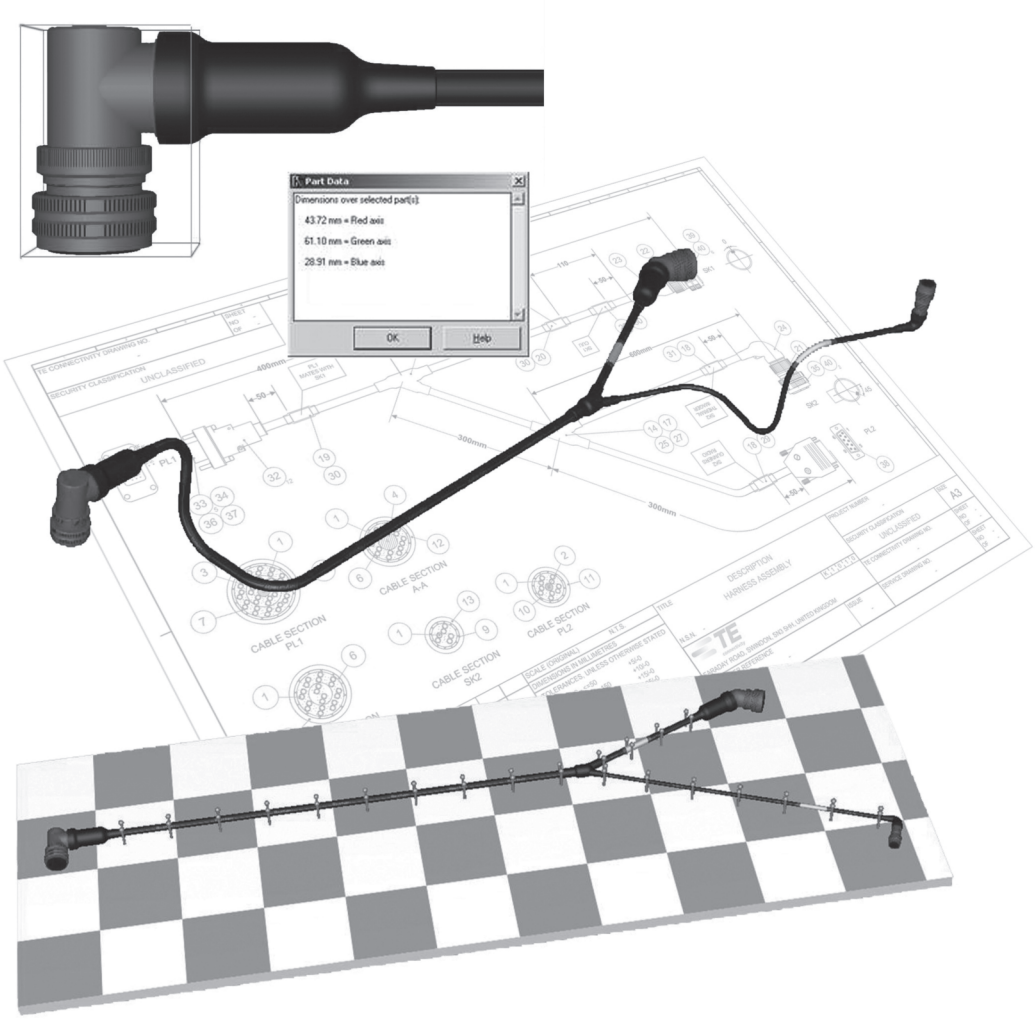




Catalog 1654025
Revised 3-13

www.te.com

Dimensions are shown for reference purposes only. Specifications subject to change.

Dimensions are in millimeters unless otherwise specified.

USA: +1 800 522 6752
Asia Pacific: +86 0 400 820 6015
UK: +44 800 267 666

For additional support numbers please visit www.te.com

## HarnWare™ V6 (Continued)

### Computer Aided Electrical Wiring Harness Design Software

### HarnWare™ V6 User Friendly Forms

The forms for selecting the wide range of TE components are clear and easy to use with many links to data sheets and design help topics.

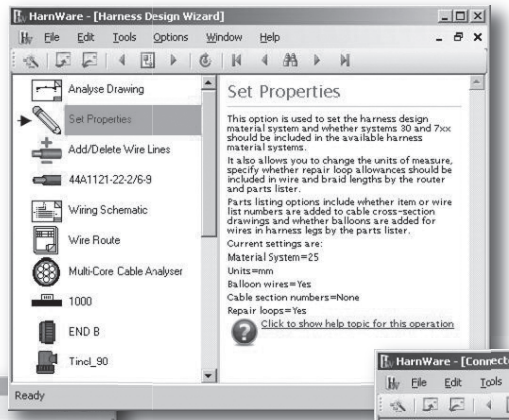


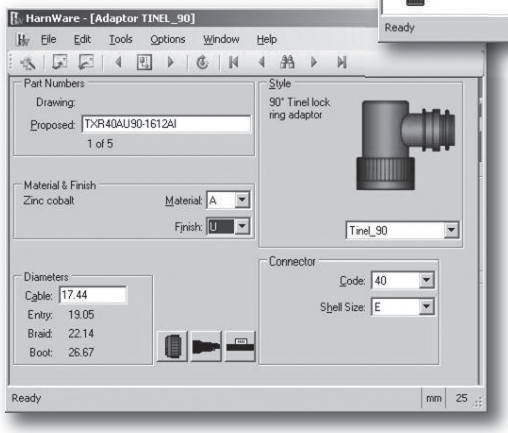


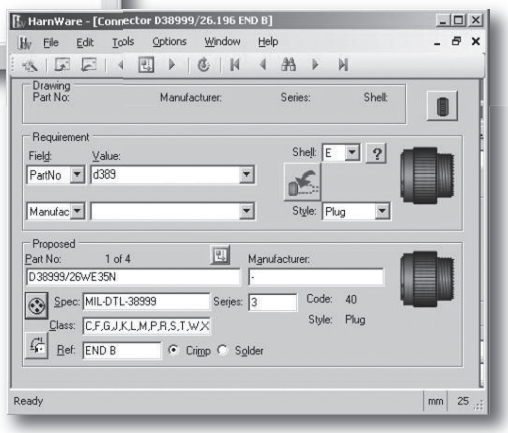


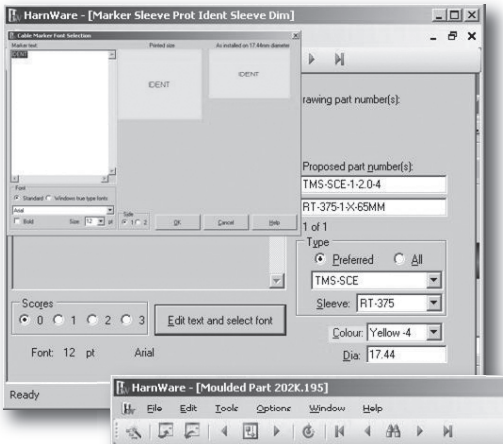


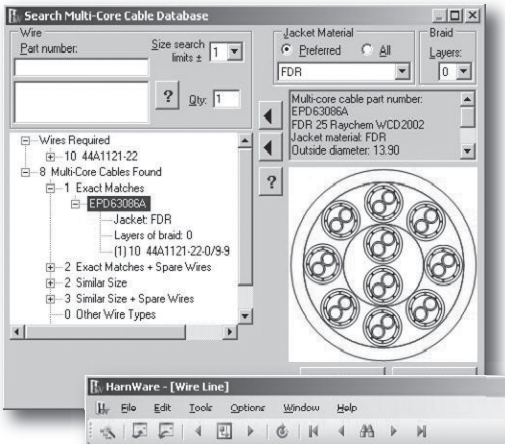


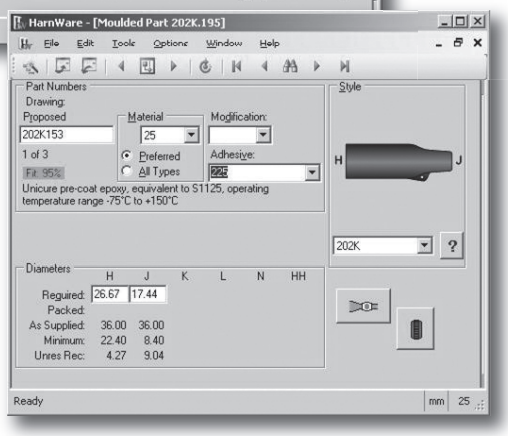


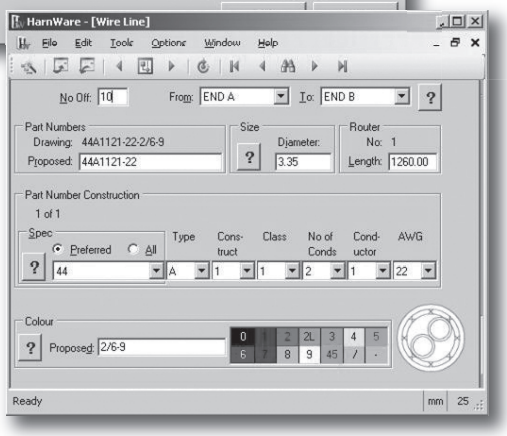






Dimensions are shown for reference purposes only. Specifications subject to change.

Dimensions are in millimeters unless otherwise specified.

USA: +1 800 522 6752
Asia Pacific: +86 0 400 820 6015
UK: +44 800 267 666

For additional support numbers please visit www.te.com

## Integrated Military Harness Systems

Assembled military harness.

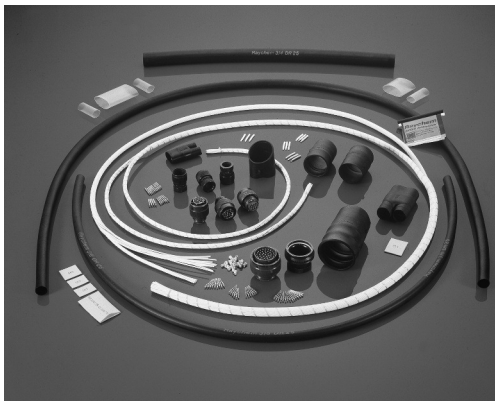

Military harness system components.

TE's integrated harness systems have been developed for a wide range of defense and industrial applications. Each system consists of compatible components, including cable jackets, heat-shrinkable components, and adhesives. Performance of these parts is assured because all components are tested separately and as part of an assembled system (see photo top left).

A typical designed harness consists of seven component parts (pictured at right):

1. Primary wire and cable
2. Heat-shrinkable tubing
3. Backshell adapter
4. Molded part
5. Adhesive
6. Cable jacket
7. Marker sleeve*

Additional components for harnessing systems include the following:

- A wide range of special devices, such as SolderSleeve devices for primary wire interconnection.
- A selection of electrical shielding (screening) options, including braids and termination assemblies.
- Multiconductor (multi-core) cables.
- Specialty adhesives and sealants for complete environmental sealing.**

Table 1 on the next page serves as both a summary of Raychem brand products for specific harnessing systems and a selection table for harnessing system components. An explanation of how to select components for a harness system follows.

*TE Identification products information available at www.te.com

**TE Sealant product information available at www.te.com



Dimensions are shown for reference purposes only. Specifications subject to change.

Dimensions are in millimeters unless otherwise specified.

USA: +1 800 522 6752
Asia Pacific: +86 0 400 820 6015
UK: +44 800 267 666

For additional support numbers please visit www.te.com

## Integrated Military Harness Systems (Continued)

**Table 1. Harnessing Systems and Their Components**

| Components | System 10 | System 20 | System 25 | System 30 | System 100 | System 200 | System 300 |
|---|---|---|---|---|---|---|---|
| Wire | 44 | 44 | 44 | 55 | 99, 100A, 100G | 55 | 55 |
| Tubing | Versafit | NT-FR | DR25 | VPB | ZHTM | RW-200 | RT555 |
| Adapter material and plating finish chosen for compatibility with the connectors. | | | | | | | |
| Molded part | -3, -4, -71 | -51 | -25 | -50 | -100 | -12 | -55/-125 |
| Preinstalled Rayaten molded part | -35 | — | -25S | — | -100S | — | — |
| Adhesive | S1017, S1030 | S1124, S1048 | S1048, S1125 | S-1125, S-1255-04 | S1030, S1125, | S1125, S1255 | S1255-04 |
| Precoated adhesive | /42, /180 | /164,/86 | /86, /225 | — | /180 | — | — |
| Conductive adhesive | — | — | S1184 | — | S1184 | — | — |
| Cable jacket | Thermorad | NT-FR | FDR-25 | Thermorad VPB | Zerohal | RW-200 | RT555 |
| Marker sleeve* | TMS-SCE | TMS-SCE | TMS-SCE | TMS-SCE | HX-SCE | HT-SCE | HT-SCE |

*TE Identification products information available at www.te.com.

### Selection Process

Selecting the components for a harnessing system is a four-step process:

**Step 1:** Select the material system appropriate for the operating conditions and environment to which the harness will be exposed.

**Step 2:** Select the adhesive system appropriate for the material system you select in Step 1.

**Step 3:** Determine the level of EMI shielding required.

**Step 4:** Select the components.

Each step is described on the pages that follow. A selection table accompanies each step. You can also use Harn*Ware* software to design your harness.

### Step 1. Select the Material System.

Detailed in Table 2 on the next page are the major material systems for use in a wide range of operating conditions and environments.

Choose a material system that:

- Has the physical characteristics your harness requires.
- Will accommodate the operating temperature and the fluids and abuse to which the harness will be exposed.





Catalog 1654025
Revised 3-13

www.te.com

Dimensions are shown for reference purposes only. Specifications subject to change.

Dimensions are in millimeters unless otherwise specified.

USA: +1 800 522 6752
Asia Pacific: +86 0 400 820 6015
UK: +44 800 267 666

For additional support numbers please visit www.te.com

## Integrated Military Harness Systems (Continued)

### Table 2. Material System Selection

| | System 10 | System 20 | System 25 |
|---|---|---|---|
| Operating temperature | -20°C to +60°C [-4°F to +140°F] | -55°C to +121°C [-67°F to +250°F] | -75°C to +150°C* [-103°F to +302°F] |
| Physical characteristics | • Environmentally sealable<br>• Lightweight<br>• Small diameter<br>• Flexible | • Environmentally sealed<br>• Tough<br>• Flexible<br>• Low profile | • Environmentally sealed<br>• Rugged<br>• Abrasion-resistant<br>• Very flexible |
| Flammability | • Flame-retardant<br>• Self-extinguishing | • Flame-retardant<br>• Self-extinguishing | • Flame-resistant<br>• Self-extinguishing |
| Fluid resistance | • Resists common industrial and military cleaning solvents and degreasers. | • Resists most commonly used military fuels, oils, and greases | • Resists most common military fuels, oils, and greases. up to 70°C [158°F]. |
| Typical applications | • Used in high-performance industrial applications, and in military communication and test equipment. | • Specially suited to military vehicles and engine compartments, low profile shapes save space and weight. | • Specially suited to military vehicles, aerospace and marine applications, and communication and test equipment. |

| | System 30 | System 100 | System 200 |
|---|---|---|---|
| Operating temperature | -55°C to +150°C [-67°F to +302°F] | -30°C to +105°C [-22°F to +221°F] | -55°C to +200°C [-67°F to +392°F] |
| Physical characteristics | • Environmentally sealed<br>• Tough<br>• Flexible<br>• Low profile | • Environmentally sealed<br>• Flexible | • Environmentally sealed<br>• Very flexible |
| Flammability | • Flame-retardant<br>• Self-extinguishing | • Low toxicity index (as defined by NES-13)<br>• Low smoke emission (as defined by NES-711)<br>• Low corrosive gas evolution | • Highly flame-retardant |
| Fluid resistance | • Resists most of commonly used military fuels, oils, and greases. | • Resistant to a range of military fuels, oils, and greases. | • Resists long-term immersion in military fuels, oils, and greases at elevated temperatures. |
| Typical applications | • Specifically suited to military vehicles and engine compartments for higher temperature applications, low profile shapes save space and weight. | • Specially suitable for confined habitat areas in military and civil applications.<br>• Extensively used in surface and submarine vessels and underground railways | • Used where there is prolonged exposure to high temperatures.<br>• Used where a harness may be permanently immersed in difficult fuels, such as in fuel tanks. |

| | System 300 |
|---|---|
| Operating temperature | -55°C to +200°C [-67°F to +392°F] |
| Physical characteristics | • Environmentally sealed<br>• Highly abrasion resistant<br>• Low profile |
| Flammability | • Highly flame-retardant |
| Fluid resistance | • Performs in aggressive fluids at extremely high temperatures |
| Typical applications | • Permanent immersion in aggressive fluids |

*Per VG 95343.

## Integrated Military Harness Systems (Continued)

### Harnessing Systems and Their Components — NBC Survivable Systems*

| Components | System 770 | System 780 | System 790 |
|---|---|---|---|
| Wire | 44 | 55 | 55 |
| Tubing | RT-770 | RT-780 | RT-790 |
| Molded part | -770 | -780 | -790/-791 |
| Adhesive | S-1264 | S-1255-04 | S-1255-04 |
| Marker sleeve cover | RT-375 | RT-375 | RT-375 |
| Marker sleeve** | TMS-SCE | NBC-SCE | NBC-SCE |

**TE Identification products information available at www.te.com.

### Material System Selection

| | System 770 | System 780 | System 790 |
|---|---|---|---|
| Operating temperature | -55°C to +125°C [-67°F to +257°F] | -65°C to +175°C [-85°F to +347°F] | -65°C to 200°C [-85°F to +392°F] |
| Physical characteristics | • Environmentally sealed<br>• NBC resistant<br>• Flexible | • Environmentally sealed<br>• NBC resistant<br>• Flexible | • Environmentally sealed<br>• NBC resistant<br>• Flexible |
| Flammability | • Flame-retardant<br>• Self-extinguishing | • Flame-retardant<br>• Self-extinguishing | • Flame-retardant<br>• Self-extinguishing |
| Fluid resistance | • Resistant to NBC uptake and decontamination | • Resistant to NBC uptake and decontamination | • Resistant to NBC uptake and decontamination |
| Typical applications | • Base-line system for NBC resistant applications | • High temperature system for NBC resistant applications | • Extreme high temperature system for NBC resistant applications |

### Adhesive Selection

| Material System | Adhesive Type | Component Adhesive | Precoated Adhesive Designation | Service Temperature |
|---|---|---|---|---|
| System 770 | Two-part Epoxy | S-1264 | — | 150°C |
| System 780 | Thermoset tape | S-1255-04 | — | 200°C |
| System 790 | Thermoset tape | S-1255-04 | — | 200°C |





Catalog 1654025
Revised 3-13

www.te.com

Dimensions are shown for reference purposes only. Specifications subject to change.

Dimensions are in millimeters unless otherwise specified.

USA: +1 800 522 6752
Asia Pacific: +86 0 400 820 6015
UK: +44 800 267 666

For additional support numbers please visit www.te.com

## Integrated Military Harness Systems (Continued)

### Step 2. Select the Adhesive System.

Two types of adhesives are used to bond heat-shrinkable boots and transitions to tubing or wire jacketing:

- Thermosets, which include epoxies and other two-part systems.
- Thermoplastics, which include pre-coated meltable adhesives applied to parts during manufacture and those applied as meltable tapes during assembly.

Table 3 below outlines the differences between thermosets and thermoplastics.

Table 4 shows which adhesive type is appropriate for each harness material system.

### Table 3. Comparison of Adhesive Types

| | Thermoset | Thermoplastic |
|---|---|---|
| Method of adhesion | Cures through chemical reaction. | Melts, flows, and solidifies. |
| Application | Two-part types require mixing and application at assembly. | Precoated types require no preparation at assembly. |
| Cure time | Varies with cure temperature. Oven cure usually desirable. | Not required. Adhesive functional when cooled to room temperature. |
| Strength | Retains most strength at elevated temperatures. | Loses strength as melt temperature is approached. |
| Disassembly | Items can be forcibly peeled apart when heated sufficiently. | Items can be separated when heated to temperature of the adhesive. |
| Repair/reassembly | Requires new adhesive or hot rollback to reenter behind connector without affecting adhesive bonds. | Can be reheated to form new bond if sufficient adhesive remains. |

### Table 4. Adhesive Selection

| Material System | Adhesive Type | Component Adhesive | Precoated Adhesive Designation | Service Temperature |
|---|---|---|---|---|
| System 10 | Thermoplastic | S-1030 | /180 | 80°C |
| | | S-1017 | /42 | 60°C |
| System 20 | Thermoplastic | S-1124 | /164 | 105°C |
| | | S-1048 | /86 | 120°C |
| System 25 | Thermoplastic | S-1048 | /86 | 120°C |
| | Two-part thermoset | S-1125 | /225 | 150°C |
| System 30 | Thermoset Tape | S-1255-04 | — | 200°C |
| | Two-part thermoset | S-1125 | — | 150°C |
| System 100 | Thermoplastic | S-1030 | /180 | 80°C |
| | | S-1048 | /86 | 120°C |
| | Two-part thermoset | S-1125 | — | 150°C |
| System 200 | Two-part thermoset | S-1125 | — | 150°C |
| | Thermoset tape | S-1255-04 | — | 200°C |
| System 300 | Thermoset tape | S-1255-04 | — | 200°C |
| System 770 | — | S-1264 | — | — |
| System 780 | Thermoset tape | S-1255-04 | — | 200°C |
| System 790 | Thermoset tape | S-1255-04 | — | 200°C |



Dimensions are shown for reference purposes only. Specifications subject to change.

Dimensions are in millimeters unless otherwise specified.

USA: +1 800 522 6752
Asia Pacific: +86 0 400 820 6015
UK: +44 800 267 666

For additional support numbers please visit www.te.com

## Integrated Military Harness Systems (Continued)

### Step 3. Determine the Level of EMI Shielding Required.

TE offers several methods and technologies for controlling electromagnetic interference (EMI) and noise in cable harnesses. Developed in response to well-established threats in military and other harsh environments, these technologies can be employed in compatible shielding (screening) systems to achieve the level of shielding required for a harness system. Table 5 on page 2-15 outlines the shielding requirements for various types of threat and levels of interference.

**Introduction**

This section is intended as a guide for the use of harness designers who are required to achieve a level of EMI control in their design practices. It is not intended that it should be a definitive statement on all aspects of EMI control for harnesses. In case of difficulty contact us for further clarification or consultancy.

For well-designed EMI control of electrical systems it is essential that a detailed knowledge of the system requirements and susceptibility be obtained. The chosen level of shielding will be dependent on the:

- Susceptibility of electrical system.
- Types of components used.
- Physical layout of the system.
- Equipment practices adopted.
- Anticipated EMI threat.

For the most cost effective design of harnesses, which offer a long-term stability in performance, the system should be designed to achieve a balance of component characteristics. Components should only be used if they are qualified to a minimum level of EMI performance and the performance and test method should be applicable to the design technique being used.

For quality assurance purposes minimum EMI characteristics should always be specified and for critical harnesses the complete performance should be measured. The technique to be adopted should always be specified.

Finally the inter-relationship between harnesses and the protection, termination and grounding of equipment boxes is vital for good system performance against EMI. All components form part of the external shield on the system and therefore should be considered in the overall EMI design process.

Subjects covered in this topic are:

- Harness Types - point to point and branched
- Shielding Levels - calculations

**Harness Types**

Harnesses are divided into two types, point-to-point and branched. The advantages and disadvantages of each from an EMI control standpoint are described below. No attempt has been made to analyze their relative merits in mechanical or installation terms.

**Point To Point:**

The three major components of this type of harness are: connectors, cable, and connector accessories.

**Connectors**

There are many different types of circular military connectors. However, for a well-shielded harness only those connectors having a guaranteed performance level should be used e.g. MIL-C-26482 Series II and MIL-C-38999 series 1 and 2, and series 3 and 4.

**Cable**

Cable used in this type of harness is generally machine made. Hand laid cables may also be used but generally the shields incorporated in these harnesses vary in consistency of performance. In the case of machine made cables all shields should be designed for optimum shielding effectiveness at radio frequency.





Catalog 1654025
Revised 3-13

www.te.com

Dimensions are shown for reference purposes only. Specifications subject to change.

Dimensions are in millimeters unless otherwise specified.

USA: +1 800 522 6752
Asia Pacific: +86 0 400 820 6015
UK: +44 800 267 666

For additional support numbers please visit www.te.com

## Integrated Military Harness Systems (Continued)

### Connector Accessories

Connector accessories, such as Raychem brand adapters, are available in many styles and therefore their performance varies with construction. For a level of consistency in performance it is essential that, as with connectors, a guarantee in performance level be achieved.

Fittings not specified in this way may significantly degrade the overall system performance.

### Branched

In addition to those components described above, branched harnesses include transitions. This type of harness is usually made by hand and it is therefore difficult to incorporate accurately made machine fabricated shields. The implications of this are:

### Shields

Cable shields may be put on by hand or by feeding through a braiding machine. However, as braid optimization depends on all the constructional parameters of the braid being accurately specified, unless braid is well constructed the shielding performance can suffer dramatically. Reductions in shield performance of 20-40 dB have been measured on badly made branched harnesses. The alternative method is to use pull on braids. If the cable bundle diameter is known the braid may be designed for optimized performance.

### Transitions

Transitions, as with accessories, are very susceptible to performance variability with construction type.

For high performance harnesses these components should also have a guaranteed performance.

In general the use of techniques such as hand soldering or the use of butted tape wraps are not recommended except where only a low performance of less that 40dB is required.

## Shielding Levels and Component Performance

### System Performance

To specify the overall requirements of a complete electronic system in terms of its EMI characteristics it is necessary to consider the performance of the individual components parts. The harnesses form one of the major entry points for interference and this as such can degrade a complete system performance by a significant amount. In general terms, assuming that a shielded harness system is used, with the available components on the market the overall harness system performance and typical applications may be as below.

- 40 to 50 dB Standard shielded systems for insensitive systems.
- 50 to 60 dB Military standard shielded systems for general applications.
- 60 to 80 dB As above but where full threat EMP & TEMPEST protection is required.
- 80 to 100 dB Severe TEMPEST and very sensitive systems.
- Over 100 dB Exceptional shielding requirements only.

Shield performance is specified in two ways, either as a power relationship in decibels (dB) or as an absolute measurement of the shield performance in terms of the surface transfer impedance. Except for very specific low frequency problems it is general to specify the performance at frequencies in the range 0.1MHz to 100MHz.

## Integrated Military Harness Systems (Continued)

### Safety Margins

As with all designs EMI system design should not be performed to the "limit of performance safety margin should always be incorporated when determining the minimum shielding level appropriate for consistent operation of the system.

The inter-relationship of shielding effectiveness measured in decibels and the surface transfer impedance in ohms presents the designer with a conversion difficulty. External harness circuits vary, as do the coupling characteristics and it is therefore only possible to give an approximate conversion. The normal conversion from decibels to ohms and vice versa is to a reasonable approximation:

Screening Effectiveness (dB) = $36 - 20 \log_{10} (Z_T \text{ (Ohms)})$

The constant term is developed from the expressions for the characteristic impedance of the line formed by the harness shield and the ground plane and the internal characteristic impedance of the inside of the harness. The translation from shielding effectiveness to surface transfer impedance is shown below in Table 5 for S.E. from 20 to 105dB.

### Connectors

A study of those connector specifications having an EMI test shows that they are generally specified in the frequency band 100MHz to 1GHz. For an assessment at lower frequencies the low frequency performance as dictated by the d.c. resistance of the connector is required. These two parameters enable the EMI characteristic to be made of the complete connector performance. Typical values for standard connectors are 65dB (MIL-C-26482 Series II) and 90dB (MIL-C-38999 Series III) connectors.

**Table 5 - Screening Effectiveness (SE)/Surface Transfer Impedance (Zt) Relationships**

| S.E. (dB) | $Z_T$ (ohms) | S.E. (dB) | $Z_T$ (ohms) |
|---|---|---|---|
| 20 | 6.309 | 65 | 0.0355 |
| 25 | 3.548 | 70 | 0.0200 |
| 30 | 1.995 | 75 | 0.0112 |
| 35 | 1.122 | 80 | 0.0063 |
| 40 | 0.631 | 85 | 0.0036 |
| 45 | 0.355 | 90 | 0.0020 |
| 50 | 0.200 | 95 | 0.0011 |
| 55 | 0.112 | 100 | 0.0006 |
| 60 | 0.063 | 105 | 0.0004 |





Catalog 1654025
Revised 3-13

www.te.com

Dimensions are shown for reference purposes only. Specifications subject to change.

Dimensions are in millimeters unless otherwise specified.

USA: +1 800 522 6752
Asia Pacific: +86 0 400 820 6015
UK: +44 800 267 666

For additional support numbers please visit www.te.com

## Integrated Military Harness Systems (Continued)

### Cable

In accordance with most common cable specification the shielding performance of a cable is specified at 30MHz. It is also well into the band where inductive leakage is the primary penetration characteristic. For frequencies above or below 30Mhz, approximations, as for connectors, must be made. It should be noted that the performance specified at 30MHz in Table 6 for different cable types is the maximum that is allowed using TE's standard Q.C. values. Actual performance may be up to 20dB better.

### Connector Accessories and Transitions

In constructional terms the performance of the connector accessory includes both the resistive terminations to the cable shield and the connector. However, it is most unusual to specify the performance of an accessory and this is a distinct weakness in the design of harnesses. The reason is that the performance is extremely variable as accessories have to fit a variety of different cable sizes and shapes. Where specified at all the relationship between the test method and the coupling mechanism for the EMI must be considered.

**Table 6 - Cable Performances**

| Type of Screen | Diameter under screen (mm) | Surface transfer Impedance Zt @ 30 Mhz (maximum) |
|---|---|---|
| Single optimized braid | Up to 7.5 | 100 milli ohms/metre |
| | 7.6 and up | 50 milli ohms/metre |
| Double optimized braid | Up to 7.5 | 10 milli ohms/metre |
| | 7.6 and up | 5 milli ohms/metre |
| Superscreened (2 braids + 1 wrap) | Up to 7.5 | 100 micro ohms/metre |
| | 7.6 and up | 50 micro ohms/metre |

## Integrated Military Harness Systems (Continued)



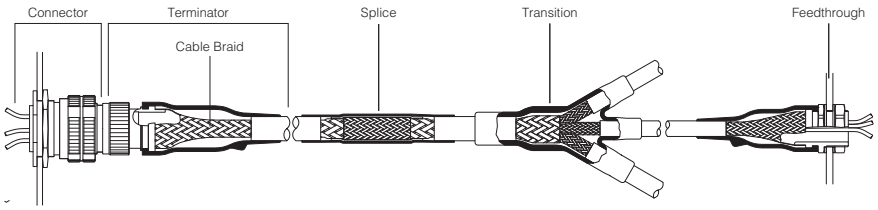


### Complete Harness

When considering the complete harness the coupling calculations are relatively simple. In general terms they are the addition of all the individual leakages within the system from connector to connector. The analysis route is therefore as follows:

1. Convert all decibel values at the desired frequency to surface transfer impedance.
2. Choose components for a 'balanced' system, i.e. the components should have approximately the same performance.
3. Add the values determined for surface transfer impedance of the components at the frequency chosen.
4. Reconvert to decibels if necessary. (Table 5 can be used for this purpose)

As a guide to the shielding performance that can be expected from a harness that is constructed using Raychem brand components, Table 7 on the next page has been compiled to help in the product selection process.

For branched harnesses it is necessary to determine whether every branch has the same susceptibility requirements or carries the same signals of power. The performance requirement of each branch is then determined and the matrix for the harness established. This is a more complex subject and not discussed here. System improvements may be achieved by changing either the connectors or cable. In general terms changing from a single to a double optimized braid improves the performance of that component by 20-25 dB. A similar advantage is achieved by changing from MIL-C-26482 Series II to MIL-C-38999 Series I connectors. However, the relative significance, as part of the system, of each component must be considered to determine the true weighting effect. For the optimum in system design a balance of component performances should be achieved wherever possible such that each of the components is of similar performance level.

### General Considerations

Although cables and harnesses are considered to be the most significant in terms of coupling into systems the construction of equipment boxes can play an important part in the overall EMI performance of a system. With the increasing use of high speed digital circuits and the generation of harmonics having high energy content relatively short printed circuit board tracks can radiate or pick up energy as efficiently as cables. If the boxes themselves are not adequately protected these circuits may constitute an EMI threat. There is a further area of significance in the EMI protection of the boxes and this is the connector/box interface. The junction may be considered to be a part of the harness system and any degradation in it may cause an overall harness degradation.



Catalog 1654025
Revised 3-13

www.te.com

Dimensions are shown for reference purposes only. Specifications subject to change.

Dimensions are in millimeters unless otherwise specified.

USA: +1 800 522 6752
Asia Pacific: +86 0 400 820 6015
UK: +44 800 267 666

For additional support numbers please visit www.te.com

## Integrated Military Harness Systems (Continued)

### Table 7 - Screen System Guide

| Harness System Components | | | | | | | | | | | | | |
|---|---|---|---|---|---|---|---|---|---|---|---|---|---|
| Shielding Level Required | Connector | Adapter Styles | | Termination | | Cable Braid (max. length in m/ft) (by cable construction) | | | | | Transition | Splice | Feed-through |
| | | Band Strap | Braided | Tinel-Lock System | Rayaten Assembly | NO | SO | DO | SSS | DSS | | | |
| <60 dB | VG95328 VG95234 | ■ | ■ | ■ | — | <2/6.5 | 15/49 | 100/328 | — | — | Shield tape & Solder-Sleeve device | Solder-Sleeve device | Tinel or solder devices |
| 60 to 80 dB | MIL-C-26482 Series 2 VG96912 Series 1 | — | — | ■ | — | — | <2/6.5 | 7/22.9 | 100/328 | — | Shield tape & Solder-Sleeve device | Solder-Sleeve device | Tinel or Rayaten assembly |
| >80 dB | MIL-C-38999 | — | — | — | ■ | — | — | <0.5/1.6 | 50/164 | 65/213 | Not recom-mended | Solder-Sleeve device | Tinel or Rayaten assembly |

NO = Non Optimized, SO = Single Optimized, DO = Double Optimized, SSS = Single Super Shield, DSS = (TE must provide info)
Note:
1. The cable lengths are to be used as a guide.
   Outside 30 MHz, the lengths that can be used will vary. For specific harness design outside 30 MHz, please consult TE.
2. Tinel-Lock use at shielding levels of 60–80 dB depends on the adapter entry, cable braid size, and design. For further details, contact TE.
3. Connectors commonly used but not mentioned in the table may not have a stated shielding performance in their specification. Contact the manufacturer for guidance.
4. This guide makes no allowance for the possible effects of resonance. TE should be consulted for advice on compensating for resonance.

### Step 4. Select Components

Using the previous sections, you can now select all of the components for an integrated harness assembly.

Please refer to the sections listed for more detailed component information:

Tubing . . . . . .Section 3
Molded Parts . . . . . .Section 4
Adhesives . . . . . .Section 5
Adapters . . . . . .Section 6
Assemblies . . . . . .Section 7
Electrical Interconnect Products . . . . . .Section 8
Wire and Cable . . . . . .Section 9



Catalog 1654025
Revised 3-13

www.te.com

Dimensions are shown for reference purposes only. Specifications subject to change.

Dimensions are in millimeters unless otherwise specified.

USA: +1 800 522 6752
Asia Pacific: +86 0 400 820 6015
UK: +44 800 267 666

For additional support numbers please visit www.te.com

## Table of Contents

**Overview** . . . . . 3-3
**Tubing Selection Guide** . . . . . 3-4, 3-5, 3-6, 3-7
**Specification Cross-Reference Guide** . . . . . 3-8, 3-9
**Tubing Categories** . . . . . 3-10

| | | |
|---|---|---|
| ATUM | High-shrink-ratio, adhesive-lined polyolefin tubing | 3-11, 3-12 |
| BSTS/BSTS-FR | General purpose, heat-shrinkable tubing | 3-13, 3-14 |
| CGPE-105 | Brightly colored, shiny, non-flame-retardant polyolefin tubing | 3-15, 3-16 |
| CGPT | General purpose, flame-retardant, polyolefin tubing | 3-17, 3-18 |
| CRN | Semirigid, flame-retardant, polyolefin tubing | 3-19, 3-20 |
| DCPT | Flexible, flame-retardant, dual-color, polyolefin tubing | 3-21, 3-22 |
| DR-25 | Heat-shrinkable, flexible, chemical and abrasion resistant tubing | 3-23, 3-24 |
| DR-25-TW | Heat-shrinkable, flexible, thin wall, chemical and abrasion resistant tubing | 3-25, 3-26 |
| DWP-125 | Flexible, high-shrink-ratio, adhesive-lined, polyolefin tubing | 3-27, 3-28 |
| ES1000 | Clear, high-shrink-ratio, adhesive-lined, semirigid polyolefin tubing | 3-29. 3-30 |
| ES2000 | Flame-retardant, high-shrink-ratio, adhesive-lined, semirigid polyolefin tubing | 3-31, 3-32 |
| ES Caps | High-shrink-ratio, adhesive-lined, semirigid polyolefin caps | 3-33, 3-34 |
| FL2500 | Fully flame-retardant, adhesive-lined, polyolefin heat-shrinkable tubing | 3-35, 3-36 |
| HCTE | Helical convolex tubing with a high crush resistance | 3-37, 3-38 |
| HF | High-flex, heavy-wall, heat-shrinkable tubing | 3-39, 3-40 |
| HFT5000 | Heat-shrinkable fabric tubing | 3-41, 3-42 |
| HRHF/HRNF/HRSR | High-ratio, heat-shrinkable tubing | 3-43, 3-44 |
| HRHT | High-ratio, high-temperature, flexible, thick wall polyolefin heat-shrinkable tubing | 3-45, 3-46 |
| HTAT | Semiflexible, dual wall, moisture-resistant tubing | 3-47, 3-48 |
| Maulflex Conduit System | Lightweight, flexible, abrasion-resistant, shielded electrical conduit | 3-49, 3-50 |
| NT | Flexible, general purpose modified elastomeric tubing | 3-51, 3-52 |
| NT-MIL | Flexible, rugged, modified elastomeric tubing | 3-53, 3-54 |
| NTFR | Very flexible, rugged neoprene elastomer tubing | 3-55, 3-56 |
| PD Caps | Semirigid, encapsulant-lined, polyolefin caps | 3-57, 3-58 |
| PTCM | Very high-shrink-ratio, dual wall, flexible heat-shrinkable tubing | 3-59, 3-60 |
| RayBlock 85 | Heat-shrinkable water-blocking system | 3-61, 3-62 |
| RayBlock 105 | Heat-shrinkable water-blocking system | 3-63, 3-64 |
| Rayrim | Commercial protective, self-adhering, edging material | 3-65, 3-66 |
| RaySpool | Convenient packaging and dispensing system for heat-shrinkable tubing | 3-67, 3-68, 3-69 |
| RHW | Rugged, heavy wall, adhesive-lined, polyolefin heat-shrinkable tubing | 3-70, 3-71 |
| RMW | Medium wall, polyolefin heat-shrinkable tubing | 3-72, 3-73 |
| RNF-100 | Flexible, flame-retardant, general purpose, polyolefin tubing | 3-74, 3-75 |






Catalog 1654025
Revised 3-13

www.te.com

Dimensions are shown for reference purposes only. Specifications subject to change.

Dimensions are in millimeters unless otherwise specified.

USA: +1 800 522 6752
Asia Pacific: +86 0 400 820 6015
UK: +44 800 267 666

For additional support numbers please visit www.te.com

**Table of Contents** (Continued)


| | | |
|---|---|---|
| RNF-150 | High-performance, flame-resistant, flexible, fluoropolymer tubing | 3-76, 3-77 |
| RNF-3000 | Flexible, high-shrink-ratio, flame-retardant, general purpose, polyolefin tubing | 3-78, 3-79 |
| RP-4800 | High-shrink-ratio, flame-retardant, polyolefin tubing | 3-80, 3-81 |
| RPPM | Flexible, dual wall, moisture proof, heat-shrinkable tubing | 3-82, 3-83 |
| RT-3 | Semirigid, flame-retardant, polyolefin tubing | 3-84, 3-85 |
| RT-375 | Clear, flame-resistant, flexible, fluoropolymer tubing | 3-86, 3-87 |
| RT555 | Fluid-resistant, chemical-resistant, crosslinked fluoropolymer tubing with extended temperature range | 3-88, 3-89 |
| High Temperature Sealing Sleeves | High temperature, heat shrinkable, fluid resistant sealing sleeves | 3-90, 3-91 |
| RT-770 | NBCCS Harness Tubing | 3-92, 3-93 |
| RT-780 | NBCCS Harness Tubing | 3-94, 3-95 |
| RT-790 | NBCCS Harness Tubing | 3-96, 3-97 |
| RW-175 | High-temperature, chemical-resistant, polyvinylidene fluoride tubing | 3-98, 3-99 |
| RW-200/RW-200-E | Heat-shrinkable, chemical-resistant, high-temperature tubing | 3-100, 3-101 |
| SCL | Semirigid, encapsulant-lined, polyolefin tubing | 3-102, 3-103 |
| SCT | Flame-retardant, adhesive-lined, semirigid polyolefin heat-shrinkable tubing (extended temperature range} | 3-104, 3-105 |
| SFR | Very flexible, flame-retardant, silicone elastomer tubing | 3-106, 3-107 |
| SRFR | Highly flexible, silicone rubber tubing | 3-108, 3-109 |
| SST/SST-FR | Self-sealing, heat-shrinkable tubing | 3-110, 3-111 |
| TAT-125 | Adhesive-lined, flexible polyolefin tubing | 3-112, 3-113 |
| TC Caps | Semirigid, flame-retardant polyolefin caps | 3-114, 3-115 |
| TFE and TFE-R | High-temperature, chemically inert, modified tubing made of PTFE® Fluoropolymer | 3-116, 3-117 |
| Tubing Kits and MiniSpools | Smaller packaging options for single wall and adhesive-lined tubing products | 3-118, 3-119 |
| URHT | Ultra high-ratio, flame-retardant, polyolefin heat-shrinkable tubing | 3-120, 3-121 |
| Versafit | Highly flame-retardant, very flexible, low-shrink-temperature, polyolefin tubing | 3-122, 3-123 |
| Versaflex | Expandable, braided, polyester sleeving | 3-124, 3-125 |
| XFFR | Halogen-free, flame-retardant, heat-shrinkable tubing | 3-126, 3-127 |
| ZH-100 | Flexible, thin-wall, low-fire-hazard tubing | 3-128, 3-129 |
| ZHTM | Heat-shrinkable, flexible tubing with low toxicity for fire safety applications | 3-130, 3-131 |

## Overview

TE Connectivity's Raychem brand of tubing was developed when our scientists pioneered the application of radiation crosslinking and the development of heat-shrinkable polymer products. Today TE is recognized worldwide for its expertise in these areas.

The Raychem brand of tubings are made of polyolefins, fluoropolymers, and elastomers enhanced by radiation crosslinking and heat-shrinkability. When heated during installation, our tubings shrink to conform to virtually any shape. They provide dependable insulation, mechanical protection, and strain relief, as well as aesthetic appeal.

Single wall tubings are available in thin-wall, medium-wall, and thick-wall versions. With dual wall tubings, an inner wall — either an encapsulant or an adhesive — melts and flows during installation heating, to protect against environmental damage. Encapsulants protect connections and components from splashes and corrosion. Adhesives go a step further, sealing to plastic, metal, rubber, or other substrates.

You can choose from tubings that are highly flexible or semirigid, designed for operation in high- or low-temperature environments, halogen-free and flame-retardant to meet a range of industry standards.

Available in many sizes, constructions, lengths, and colors to meet commercial, military or medical specifications, our tubings can also be customized for special applications.

Installation is fast and easy with handheld heating tools or bench-mounted heaters. A range of automatic and semi-automatic installation equipment is available for high-volume applications.





Catalog 1654025
Revised 3-13

www.te.com

Dimensions are shown for reference purposes only. Specifications subject to change.

Dimensions are in millimeters unless otherwise specified.

USA: +1 800 522 6752
Asia Pacific: +86 0 400 820 6015
UK: +44 800 267 666

For additional support numbers please visit www.te.com

## Tubing Selection Guide

| | | PRODUCT | Polyolefin | Fluoropolymer | Elastomer | Operating Temperature °C / [°F] | | Min. shrink temperature (°C) | Min. full recovery temperature (°C) | Shrink ratio |
|---|---|---|---|---|---|---|---|---|---|---|
| **Single Wall** | Very flexible | Versafit | • | | | -55 to 135 | [-67 to 275] | 70 | 90 | 2:1 |
| | Flexible | CGPE-105 | • | | | -70 to 105 | [-94 to 221] | 85 | 110 | 2:1 |
| | | CGPT | • | | | -40 to 135 | [-40 to 275] | 80 | 120 | 2:1 |
| | | DCPT | • | | | -55 to 135 | [-67 to 275] | 95 | 120 | 2:1 |
| | | RNF-100 | • | | | -55 to 135 | [-67 to 275] | 95 | 121 | 2:1 |
| | | RNF-3000 | • | | | -55 to 135 | [-67 to 275] | 80 | 120 | 3:1 |
| | | RP-4800 | • | | | -55 to 135 | [-67 to 275] | 95 | 121 | 4:1 |
| | Semirigid | CRN | • | | | -55 to 135 | [-67 to 275] | 110 | 135 | 2:1 |
| | | RT-3 | • | | | -55 to 135 | [-67 to 275] | 110 | 135 | 2.5:1 |
| **Dual wall** | Semiflexible | ATUM | • | | | -55 to 110 | [-67 to 230] | 80 | 110 | 3:1 |
| [adhesive-and | | | | | | | | | | 4:1 |
| encapsulant-lined] | | DWP-125 | • | | | -40 to 110 | [-40 to 230] | 80 | 125 | 3:1 |
| | | HTAT | • | | | -55 to 125 | [-67 to 257] | 80 | 110 | 4:1 |
| | Flexible | PTCM | • | | | -40 to 85 | [-40 to 185] | 60 | 80 | 6:1 |
| | | RPPM | • | | | -40 to 85 | [-40 to 185] | 60 | 80 | 4:1 |
| | | TAT-125 | • | | | -55 to 110 | [-67 to 230] | 95 | 121 | 2:1 |
| | Semirigid | ES1000 | • | | | -40 to 130 | [-40 to 266] | 110 | 135 | 4:1 |
| | | ES2000 | • | | | -40 to 130 | [-40 to 266] | 110 | 135 | 4:1 |
| | | FL2500 | • | | | -40 to 135 | [-40 to 275] | 110 | 135 | 4:1 |
| | | SCL | • | | | -55 to 110 | [-67 to 230] | 125 | 135 | 3:1 |
| | | SCT | • | | | -40 to 150 | [-40 to 302] | 110 | 135 | 4:1 |
| **Heavy Duty** | | BSTS/BSTS-FR | • | | | -55 to 90 | [-67 to 194] | 90 | 121 | 3:1 |
| | | HF | • | | | -55 to 90 | [-67 to 194] | 80 | 121 | 3:1 |
| | | HRHF/HRNF/HRSR | • | | | -55 to 90 | [-67 to 194] | 80 | 121 | 5.6:1 |
| | | RHW | • | | | -55 to 110 | [-67 to 230] | 110 | 125 | 3:1 |
| | | RMW | • | | | -55 to 110 | [-67 to 230] | 110 | 125 | 3:1 |
| | | SST/SST-FR | • | | | -55 to 90 | [-67 to 194] | 90 | 121 | 3:1 |
| **Special Purpose** | Elastomers | DR-25 | | | • | -75 to 150 | [-103 to 302] | 150 | 175 | 2:1 |
| | | HRHT | | | | | | | | |
| | | NT | | | • | -55 to 90 | [-67 to 194] | 90 | 135 | 1.8:1 |
| | | NT-MIL | | | • | -70 to 121 | [-94 to 250] | 90 | 135 | 1.8:1 |
| | | NTFR | | | • | -70 to 121 | [-94 to 250] | 90 | 135 | 2:1 |
| | | RW-200 | | | • | -40 to 200 | [-40 to 392] | 100 | 175 | 2:1 |
| | | RW-200-E | | | • | -55 to 200 | [-67 to 392] | 100 | 175 | 2:1 |
| | | SFR | | | • | -75 to 180 | [-103 to 356] | 135 | 175 | 1.75:1 |
| | | SRFR | | | • | -75 to 200 | [-103 to 392] | 135 | 175 | 1.5:1 |
| | | URHT | | | | | | | | |
| | Fluoropolymers | RNF-150 | | • | | -55 to 150 | [-67 to 302] | 110 | 150 | 2:1 |
| | | RT-375 | | • | | -55 to 150 | [-67 to 302] | 125 | 150 | 2:1 |
| | | RT555 | | • | | -65 to 200 | [-85 to 392] | 150 | 220 | 2:1 |
| | | RT-770 | | | | -55 to 125 | [-67 to 257] | 135 | 150 | 2:1 |
| | | RT-780 | | | | -55 to 175 | [-67 to 347] | 180 | 200 | 2:1 |
| | | RT-790 | | | | -55 to 200 | [-67 to 392] | 235 | 250 | 2:1 |
| | | RW-175 | | • | | -55 to 175 | [-67 to 347] | 155 | 175 | 2:1 |
| | | TFE and TFE-R | | • | | -67 to 250 | [-89 to 482] | 330 | 340 | 1.8:1/ 3.2:1 |
| | Caps | ES Caps | • | | | -40 to 105 | [-40 to 221] | 100 | 135 | 4:1 |
| | | PD Caps | • | | | -55 to 110 | [-67 to 230] | 125 | 135 | 3:1 |
| | | TC Caps | • | | | -55 to 135 | [-67 to 275] | 110 | 135 | 2.5:1 |

*For specific MIL-Spec information for each product, refer to individual product pages or the Tubing Cross-Reference Guide on page 3-8.

**Sizes 9/3 through 70/21 only. †Clear is not flame-retardant.



Dimensions are shown for reference purposes only. Specifications subject to change.

Dimensions are in millimeters unless otherwise specified.

USA: +1 800 522 6752
Asia Pacific: +86 0 400 820 6015
UK: +44 800 267 666

For additional support numbers please visit www.te.com

## Tubing Selection Guide (Continued)

| Size range (inside diameter as supplied) | Colored | Clear | Flame-retardant | UL 224 | CSA | VW-1 (UL/CSA) | MIL Spec* | USP Class VI | ABS | UL D486** | DESCRIPTION |
|---|---|---|---|---|---|---|---|---|---|---|---|
| 3/64" to 4" | • | | • | • | • | • | • | | | | Highly flame-retardant, multi-spec polyolefin |
| 3/64" to 2" | • | • | | | | | | | | | Brightly colored, general purpose polyolefin |
| 1.6 mm to 38 mm | • | • | • | • | • | | | | | | General purpose, flame-retardant polyolefin† |
| 3 mm to 38 mm | • | | • | • | • | | | | | | Green and yellow striped polyolefin |
| 3/64" to 5" | • | • | • | • | • | | • | | | | High-performance flexible polyolefin† |
| 1.5 mm to 39 mm | • | • | • | • | • | | • | | | | 3:1 shrink ratio general-purpose polyolefin† |
| 3/4" to 4 1/2" | • | | • | • | | | • | | | | 4:1 shrink ratio polyolefin |
| 3/64" to 3/4" | • | • | • | • | • | | • | | | | Flame-retardant polyolefin† |
| .240" to .485" | • | | • | • | • | | | | | | Semirigid polyolefin for terminal insulation |
| 3 mm to 40 mm | • | • | • | • | | | • | | | | 3:1 and 4:1 shrink ratio adhesive-lined polyolefin† |
| 4 mm to 52 mm | • | | • | • | | | | | | | |
| 1/8" to 1" | • | | • | • | • | | | | | | 3:1 shrink ratio adhesive-lined polyolefin |
| 4 mm to 48 mm | • | | • | | | | | | | | High-temperature adhesive-lined polyolefin9 mm |
| | • | | | | | | | | | | Very high shrink ratio, dual wall, flexible polyolefin tubing |
| 4 mm to 16 mm | • | • | | | | | | | | | Dual wall, moisture-proof polyolefin |
| 1/8" to 1 1/2" | • | • | • | • | | | • | | | | 2:1 adhesive-lined polyolefin† |
| .225" to .700" | | • | | • | | | | | | | Clear high-shrink-ratio adhesive-lined polyolefin |
| .225" to .700" | • | | • | • | | | | | | | Flame-retardant adhesive-lined polyolefin |
| .300" to .700" | • | | • | | | | | | | | Fully flame-retardant, adhesive-lined polyolefin |
| 1/8" to 1" | • | | | • | | | • | | | | 3:1 shrink ratio encapsulant-lined polyolefin |
| .300" to .700" | • | | • | | | | | | | | High-temperature adhesive-lined polyolefin |
| .3" to 4.5" | • | • | • | | | | | | • | | Rugged, general purpose, thick-wall polyolefin† |
| .4" to 2.7" | • | | • | | | | | | • | | Highly flexible, thick-wall polyolefin |
| .6" to 4" | • | | • | | | | | | • | | High-shrink-ratio repair sleeve |
| 9 mm to 180 mm | • | | | | | | | | | • | Heavy wall adhesive-lined polyolefin |
| 10 mm to 180 mm | • | | | | | | | | | | Medium wall polyolefin |
| .3" to 4.5" | • | | • | | | | • | | • | | Self-sealing, dual wall polyolefin |
| 1/8" to 3" | • | | • | | | | • | | | | Diesel-resistant elastomer |
| | | | | | | | | | | | |
| 1/8" to 4" | • | | • | | | | | | | | Flexible general-purpose modified elastomer |
| 1/8" to 4" | • | | • | | | | • | | | | Flexible rugged modified elastomer |
| 1/8" to 3" | • | | • | | | | • | | | | Very flexible rugged neoprene |
| 1/8" to 2" | • | | • | | | | • | | | | High-temperature flexible elastomer |
| 1/8" to 2" | • | | • | | | | • | | | | High-temperature flexible elastomer |
| 1/4" to 2" | • | | • | | | | • | | | | Very flexible silicone |
| 2.9 mm to 51 mm | • | | • | • | | • | | | | | Very flexible silicone rubber |
| | | | | | | | | | | | |
| 3/64" to 1" | • | | • | • | | • | • | | | | High-performance flexible fluoropolymer |
| 3/64" to 1 1/2" | • | • | • | • | • | • | • | | | | Clear high-performance flexible fluoropolymer |
| 1/8" to 2" | • | | • | • | | • | | | | | Fluid- and chemical-resistant fluoropolymer |
| 3/64" to 1 1/2" | • | • | • | • | • | • | • | | | | High-performance fluoropolymer |
| 0.8 mm to 11.9 mm/ | | • | • | | | | • | | | | High-temperature PTFE® fluoropolymer resin |
| 2 mm to 32 mm | | | | | | | | | | | |
| 1/8" to 2" | | | • | | | | | | | | NBCCS tubing rated to 125˚C |
| 1/8" to 2" | | | • | | | | | | | | NBCCS tubing rated to 175˚C |
| 1/8" to 2" | | | • | | | | | | | | NBCCS tubing rated to 200˚C |
| 1/16" to 1" | • | • | | | | | | • | | | Autoclavable semirigid fluoropolymer |
| .225" to .427" | • | • | • | • | | | | | | | High-ratio, adhesive-lined caps† |
| 1/8" to 1/2" | • | | | • | | | | | | | Semirigid encapsulant-lined polyolefin caps |
| 1/16" to 1/4" | • | | • | • | | | | | | | Semirigid flame-retardant polyolefin caps |

PTFE is a trademark of E. I. du Pont de Nemours and Company.





Catalog 1654025
Revised 3-13

www.te.com

Dimensions are shown for reference purposes only. Specifications subject to change.

Dimensions are in millimeters unless otherwise specified.

USA: +1 800 522 6752
Asia Pacific: +86 0 400 820 6015
UK: +44 800 267 666

For additional support numbers please visit www.te.com

## Tubing Selection Guide (Continued)

| PRODUCT | | | Polyolefin | Fluoropolymer | Elastomer | Operating Temperature °C / [°F] | | Min. shrink temperature (°C) | Min. full recovery temperature (°C) | Shrink ratio |
|---|---|---|---|---|---|---|---|---|---|---|
| **Special Purpose** | Conduit | HCTE | | • | | -55 to 200 | [-67 to 392] | N/A | N/A | N/A |
| (Continued) | Kits | RayBlock 85 | • | | | -40 to 85 | [-40 to 185] | 80 | 110 | 4:1 |
| | | RayBlock 105 | • | | | -40 to 105 | [-40 to 221] | 80 | 110 | 4:1 |
| | | Tubing Kits and Mini-Spools | • | | | Various; see page 139-140 | | See page 139-140 | See page 139-140 | 2:1 up to 4:1 |
| | Low Toxicity | XFFR | • | | | -55 to 105 | [-67 to 221] | 70 | 121 | 3:1 |
| | | ZH-100 | • | | | -30 to 105 | [-22 to 221] | 80 | 120 | 2:1 |
| | | ZHTM | • | | | -30 to 105 | [-22 to 221] | 80 | 121 | 2:1 |
| | Edging Matl | Rayrim | • | | | -55 to 80 | [-67 to 176] | 120 | 150 | N/A |
| | Fiber & Fabric | HFT5000 | | | | -40 to 125 | [-40 to 257] | 80 | 110 | 2:1 |
| | Braids | Versaflex | | | | -50 to 150 | [-58 to 302] | N/A | N/A | N/A |

*For specific MIL-Spec information for each product, refer to individual product pages or the Tubing Cross-Reference Guide on page 3-8.

**Sizes 9/3 through 70/21 only. †Clear is not flame-retardant.



Dimensions are shown for reference purposes only. Specifications subject to change.

Dimensions are in millimeters unless otherwise specified.

USA: +1 800 522 6752
Asia Pacific: +86 0 400 820 6015
UK: +44 800 267 666

For additional support numbers please visit www.te.com

## Tubing Selection Guide (Continued)

| Size range (inside diameter as supplied) | Colored | Clear | Flame-retardant | UL 224 | CSA | VW-1 (UL/CSA) | MIL Spec* | USP Class VI | ABS | UL D486** | DESCRIPTION |
|---|---|---|---|---|---|---|---|---|---|---|---|
| .187" to 2" | • | | • | | | | | | | | Modified ETFE, helically convoluted tubing |
| 12 mm to 32 mm | • | | • | | | | | | | | Heat-shrinkable water blocking system |
| 12 mm to 32 mm | • | | • | | | | | | | | Heat-shrinkable water blocking system |
| See page 139-140 | • | • | • | • | • | • | • | | | | Smaller packaging options for single wall and adhesive-lined tubing |
| .4" to 3" | • | | • | | | | | | • | | Halogen-free, flame-retardant polyolefin |
| 1/8" to 2" | • | | • | | | | | | | | Thin-wall, low-fire-hazard polyolefin |
| 3 mm to 40 mm | • | | • | | | | | | | | Low toxicity, flexible polyolefin |
| 0.8 mm to 4.5 mm | • | | | | | | | | | | Protective self-adhering edging material |
| 12 mm to 80 mm | • | | | | | | | | | | Heat-shrinkable, fabric tubing |
| 3 mm to 50 mm | • | | | | | | | | | | Expandable, braided polyester sleeving |





Catalog 1654025
Revised 3-13

www.te.com

Dimensions are shown for reference purposes only. Specifications subject to change.

Dimensions are in millimeters unless otherwise specified.

USA: +1 800 522 6752
Asia Pacific: +86 0 400 820 6015
UK: +44 800 267 666

For additional support numbers please visit www.te.com

## Specification Cross-Reference Guide

| Product Type | UL File | CSA File | AMS-DTL-23053* Sheet | AMS-DTL-23053* Class | MIL-PRF-46846 Type | MIL-PRF-46846 Class | TE Specification | Page No. |
|---|---|---|---|---|---|---|---|---|
| ATUM | E85381** | | /4 | 3 | | | RW-2063 & RK-6024 | 3-11 |
| BSTS | | | | | | | RW-2017 | 3-13 |
| BSTS-FR | | | /15 | 1 & 2*** | | | RW-2017 | 3-13 |
| CGPE-105 | | | | | | | CGPE-105 SCD | 3-15 |
| CGPT | E35586 | LR31929 | | | | | RW-2059 | 3-17 |
| CRN Type 1 (colors) | E35586 | LR31929† | /6 | 1 | | | RT-360, Type 1 | 3-19 |
| CRN Type 2 (clear) | | | /6 | 2 | | | RT-360, Type 2 | 3-19 |
| DCPT | E35586 | LR31929 | | | | | RW-2056 | 3-21 |
| DR-25 | | | /16 | | | | RT-1116 | 3-23 |
| DWP-125 | E35586 | LR31929 | | | | | DWP-125 SCD | 3-25 |
| ES1000 | E85381 | | | | | | RT-1113 | 3-27 |
| ES2000 | E85381 | | | | | | RT-1112 | 3-29 |
| ES Caps | E85381 | | | | | | RW-3006 | 3-31 |
| FL2500 | | | | | | | FL2500 SCD | 3-33 |
| HCTE | | | | | | | RT-1162 | 3-35 |
| HF | | | /15 | 1*** | | | RW-2023 | 3-37 |
| HFT5000 | E199379 | | | | | | RW-2060 | 3-39 |
| HRHF | | | | | | | RW-2013 | 3-41 |
| HRNF | | | | | | | RW-2013 | 3-41 |
| HRSR | | | | | | | RW-2013 | 3-41 |
| HRHT | | | | | | | HRHT SCD | 3-43 |
| HTAT | | | | | | | RW-2052 | 3-45 |
| NT | | | | | | | RT-510 | 3-47 |
| NT-MIL | | | /1 | 1 & 2 | | | RW-3030 | 3-49 |
| NTFR | | | | | | | RT-511 | 3-51 |
| PD Caps | E85381 | | | | | | PD Caps SCD | 3-53 |
| PTCM | | | | | | | RK-6768 | 3-55 |
| RayBlock 85 | | | | | | | RW-2101 | 3-57 |
| RayBlock 105 | | | | | | | RW-2102 | 3-59 |
| Rayrim Edging Material | | | | | | | RK-6182 | 3-61 |
| RaySpool | | | | | | | | 3-63 |
| RHW | E91151*** | | | | | | RHW SCD | 3-66 |
| RMW | | | | | | | RMW SCD | 3-68 |
| RNF-100 Type 1 (colors) | E35586 | LR31929 | /5 | 1 | | | RT-350, Type 1 | 3-70 |
| RNF-100 Type 2 (clear) | | | /5 | 2 | | | RT-350, Type 2 | 3-70 |
| RNF-150 | E35586 VW-1 | | /18 | 2 | | | RT-370 | 3-72 |
| RNF-3000 | E35586 | LR31929 | | | | | RW-2053 | 3-74 |
| RP-4800 | E35586 | | /5 | 1†† | | | RT-1122 | 3-76 |
| RPPM | | | | | | | RK-6214 | 3-78 |
| RT-3 | E35586 | LR31929† | | | | | RT-360††† | 3-80 |
| RT-375 | E35586 VW-1 | LR31929 VW-1 | /18 | 2 | | | RT-375 | 3-82 |
| RT555 | E85381 | | | | | | RT-555 | 3-84 |
| RT-770 | | | | | | | | 3-86 |
| RT-780 | | | | | | | | 3-88 |
| RT-790 | | | | | | | | 3-90 |
| RW-175 | E35586 VW-1 | LR31929 VW-1 | /8 | | | | RW-3029 | 3-92 |
| RW-200 | | | /13 | | | | RT-1146 | 3-94 |
| RW-200-E | | | | | | | RK-6014/1 | 3-94 |
| SCL | E85381 | | /4 | 1 | | | RT-1301 | 3-96 |
| SCT | | | | | | | SCT SCD | 3-98 |
| SFR | | | /10 | | II | 1 | RT-1140 | 3-100 |
| SRFR | E85381 VW-1 | | | | | | RW-2057 | 3-102 |
| SST | | | | | | | RW-2011 | 3-104 |
| SST-FR | | | /15 | 1 & 2 | | | RW-2011 | 3-104 |
| TAT-125 Type 1 (colors) | E85381 | | /4 | 2 | | | RW-3032 | 3-106 |



Dimensions are shown for reference purposes only. Specifications subject to change.

Dimensions are in millimeters unless otherwise specified.

USA: +1 800 522 6752
Asia Pacific: +86 0 400 820 6015
UK: +44 800 267 666

For additional support numbers please visit www.te.com

## Specification Cross-Reference Guide (Continued)

| Product Type | UL File | CSA File | AMS-DTL-23053* Sheet | AMS-DTL-23053* Class | MIL-PRF-46846 Type | MIL-PRF-46846 Class | TE Specification | Page No. |
|---|---|---|---|---|---|---|---|---|
| TAT-125 Type 2 (clear) | | | | | | | RW-3032 | 3-106 |
| TC Caps | E85381 | | | | | | TC Caps SCD | 3-108 |
| TFE/TFE-R | | | | | | | RW-2054, RW-2055 | 3-110 |
| Tubing Kits | | | | | | | Various | 3-112 |
| URHT | | | | | II | | URHT SCD | 3-114 |
| Versafit | E35586 VW-1 | LR31929 VW-1 | /5 | 1 & 3 | | | RW-3009 | 3-116 |
| Versaflex | | | | | | | RK-6772 | 3-118 |
| Versaflex-FR | E306976 | | | | | | | 3-118 |
| XFFR | | | | | | | RW-2016 | 3-120 |
| ZH-100 | | | | | | | RW-2031 | 3-122 |
| ZHTM | | | | | | | RW-2058 | 3-124 |

*Formerly MIL-I-23053 and MIL-DTL-23053 **Black only, except sizes 3/1 and 4/1. ***Sizes 9/3 through 70/21 only.

†Black only †† Overexpanded †††With exception to dimensions and longitudinal change.





Catalog 1654025
Revised 3-13

www.te.com

Dimensions are shown for reference purposes only. Specifications subject to change.

Dimensions are in millimeters unless otherwise specified.

USA: +1 800 522 6752
Asia Pacific: +86 0 400 820 6015
UK: +44 800 267 666

For additional support numbers please visit www.te.com

## Tubing Categories

| | Type | Product Name | | |
|---|---|---|---|---|
| **Single Wall** | Very Flexible | Versafit | | |
| | Flexible | CGPE-105<br>CGPT | DCPT<br>RNF-100 | RNF-3000<br>RP-4800 |
| | Semirigid | CRN | RT-3 | |
| **Dual Wall** | Semi-flexible | ATUM | DWP-125 | HTAT |
| | Flexible | PTCM | RPPM | TAT-125 |
| | Semirigid | ES1000<br>ES2000 | FL2500<br>SCL | SCT |
| **Heavy Duty** | | BSTS/BSTS-FR<br>HF | HRHT<br>HRHF/HRNF/HRSR<br>RMW | RHW<br>SST/SST-FR<br>URHT |
| **Special Purpose** | Elastomers | DR-25<br>DR-25TH<br>NT<br>NT-MIL | NTFR<br>RW-200<br>RW-200-E | SFR<br>SRFR<br>UPB |
| | Fluoropolymers | RNF-150<br>RT-375<br>RT555 | RT-770<br>RT-780<br>RT-790 | RW-175<br>RY-780<br>TFE and TFE-R |
| | Caps | ES Caps<br>PD Caps | TC Caps | |
| | Conduit | HCTB | Maulflex | |
| | Kits | RayBlock 85<br>RayBlock 105 | RaySpool<br>Tubing Kits and Mini-Spools | |
| | Low toxicity | XFFR | ZH-100 | ZHTM |
| | Edging material | Rayrim | | |
| | Fiber and fabric | HFT5000 | | |
| | Braid | Versaflex | | |



Dimensions are shown for reference purposes only. Specifications subject to change.

Dimensions are in millimeters unless otherwise specified.

USA: +1 800 522 6752
Asia Pacific: +86 0 400 820 6015
UK: +44 800 267 666

For additional support numbers please visit www.te.com

## ATUM

### High-Shrink-Ratio, Adhesive-Lined Polyolefin Tubing

### Product Facts

- 3:1 and 4:1 shrink ratios allow for connector-to-cable sealing
- Tubing environmentally seals and protects components and interconnections
- Medium wall provides increased mechanical protection
- The adhesive in ATUM tubing bonds to a wide variety of plastics, rubbers, and metals, including polyethylene, aluminum, steel, and copper
- RoHS compliant

### Applications

Environmentally seals and protects a wide variety of electrical applications, including back end connector sealing, breakouts, and connector-to-cable transitions. High expansion ratio makes it possible to repair most damaged cable jackets without removing connectors.

### Installation

Minimum shrink temperature: 80°C [176°F]

Minimum full recovery temperature: 110°C [230°F]

### Operating Temperature Range

-55°C to 110°C
[-67°F to 230°F]

### Specifications/Approvals

| Series | UL** | Military | TE |
|---|---|---|---|
| ATUM | E85381<br>600V, 110°C | AMS-DTL-23053/4,* Class 3 | RW-2063 — Black<br>RK-6024 — Colors and clear |

*Formerly MIL-I-23053/4 and MIL-DTL-23053/4. Sizes 3/1, 6/2, 12/4, 24/8, and 40/13 only.
**Black only, except sizes 3/1 and 4/1.

| Available in: | Americas | Europe | Asia Pacific |
|---|---|---|---|
| | ■ | ■ | ■ |



Catalog 1654025
Revised 3-13

www.te.com

Dimensions are shown for reference purposes only. Specifications subject to change.

Dimensions are in millimeters unless otherwise specified.

USA: +1 800 522 6752
Asia Pacific: +86 0 400 820 6015
UK: +44 800 267 666

For additional support numbers please visit www.te.com

## ATUM (Continued)

### Product Dimensions

| Size | Inside Diameter | | Recovered Wall Thickness** | |
|---|---|---|---|---|
| | Minimum Expanded as Supplied | Maximum Recovered After Heating | Total Wall After Heating | Adhesive Wall After Heating (Nominal) |
| **3:1** | | | | |
| 3/1 | 3.0 [0.118] | 1.0 [0.039] | 1.00 ± 0.28 [0.039 ± 0.010] | 0.50 [0.020] |
| 4.5/1.5 | 4.5 [0.177] | 1.5 [0.059] | 1.10 ± 0.25 [0.043 ± 0.011] | 0.50 [0.020] |
| 6/2 | 6.0 [0.236] | 2.0 [0.079] | 1.00 ± 0.28 [0.039 ± 0.010] | 0.50 [0.020] |
| 9/3 | 9.0 [0.354] | 3.0 [0.118] | 1.40 ± 0.28 [0.055 ± 0.010] | 0.61 [0.024] |
| 12/4 | 12.0 [0.472] | 4.0 [0.157] | 1.78 ± 0.38 [0.070 ± 0.015] | 0.76 [0.030] |
| 19/6 | 19.0 [0.748] | 6.0 [0.236] | 2.25 ± 0.55 [0.088 ± 0.022] | 0.76 [0.030] |
| 24/8 | 24.0 [0.940] | 8.0 [0.315] | 2.54 ± 0.55 [0.100 ± 0.022] | 1.02 [0.040] |
| 40/13 | 40.0 [1.570] | 13.0 [0.512] | 2.54 ± 0.55 [0.100 ± 0.022] | 1.02 [0.040] |
| **4:1** | | | | |
| 4/1 | 4.0 [0.157] | 1.0 [0.039] | 1.00 ± 0.28 [0.039 ± 0.010] | 0.50 [0.020] |
| 8/2 | 8.0 [0.315] | 2.0 [0.079] | 1.00 ± 0.28 [0.039 ± 0.010] | 0.50 [0.020] |
| 12/3 | 12.0 [0.472] | 3.0 [0.118] | 1.40 ± 0.28 [0.055 ± 0.010] | 0.61 [0.024] |
| 16/4 | 16.0 [0.630] | 4.0 [0.157] | 1.78 ± 0.38 [0.070 ± 0.015] | 0.76 [0.030] |
| 24/6 | 24.0 [0.945] | 6.0 [0.236] | 2.25 ± 0.55 [0.088 ± 0.022] | 0.76 [0.030] |
| 32/8 | 32.0 [1.260] | 8.0 [0.315] | 2.54 ± 0.55 [0.100 ± 0.022] | 1.02 [0.040] |
| 52/13 | 52.0 [2.050] | 13.0 [0.512] | 2.54 ± 0.55 [0.100 ± 0.022] | 1.02 [0.040] |

**Wall thickness will be less if tubing recovery is restricted during shrinkage.

### Ordering Information

| | | |
|---|---|---|
| Color | Standard | Black (-0) |
| | Nonstandard | Clear in 3:1 sizes only (-X, non-flame-retardant jacket); other colors available on request. |
| Size selection | Always order the largest size that will shrink snugly over the component to be covered. Special order sizes are available upon request. | |
| Standard packaging*** | In 1.2-meter [4-foot] lengths or on spools. | |
| Ordering description**** | Specify product name, size and color (for example, ATUM 8/2-0). | |

***Only 1.2 meter [4-foot] lengths are standard in the Americas. ATUM tubing on spools is nonstandard.
****For supply to MIL spec., add -MS to ordering description.

## BSTS/BSTS-FR

### General Purpose, Heat-Shrinkable Tubing

### Product Facts

- **Excellent thick-wall insulation and abrasion protection**
- **No adhesive – can be removed easily**
- **Expansion ratios as high as 3:1**
- **Availability in flame-retardant material with FR callout (see "Ordering information and Part numbering system" on the next page)**
- **BSTS has the following agency approvals:**
  - **ABS (American Bureau of Shipping)**
  - **Lloyd's (Lloyd's Register of Shipping)**
- **RoHS compliant**

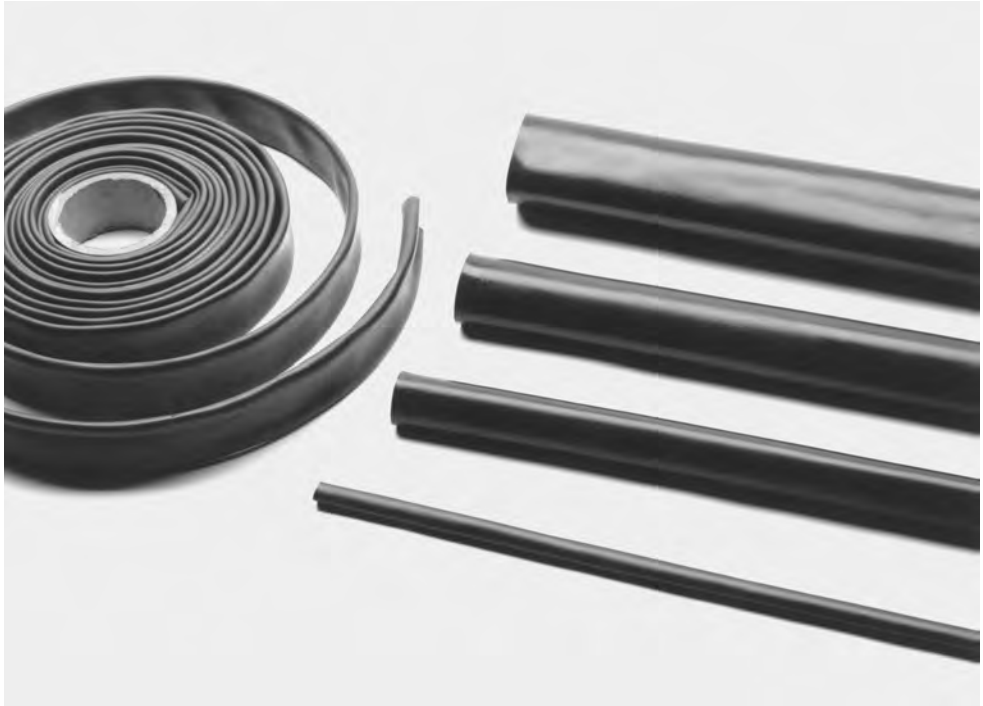

### Applications

BSTS heat-shrinkable tubing is made of a rugged polymer that resists moisture, fungus, and weathering. It also has excellent electrical properties. This tubing is useful in applications where insulation, abrasion resistance, and strain relief are important. When used with sealant tape (S-1305 for flame-retardant or S-1278 for non-flame-retardant), it can provide a watertight system in nonpressurized applications.

### Installation

Minimum shrink temperature: 90°C [194°F]

Minimum full recovery temperature: 121°C [250°F]

### Operating Temperature Range

-55°C to 110°C
[-67°F to 230°F]

### Specifications/Approvals

| Series | Military | Industry | TE |
|---|---|---|---|
| BSTS | — | — | RW-2017 |
| BSTS-FR | AMS-DTL-23053/15*, Class 1 and Class 2** | ASTM D 685, nonburning | RW-2017 |

*Formerly MIL-I-23053/15 and MIL-DTL-23053/15.
**Except for coatings requirement. Refer to SST-FR when coating is required.

| Available in: | Americas | Europe | Asia Pacific |
|---|---|---|---|
| | ■ | ■ | ■ |





Catalog 1654025
Revised 3-13

www.te.com

Dimensions are shown for reference purposes only. Specifications subject to change.

Dimensions are in millimeters unless otherwise specified.

USA: +1 800 522 6752
Asia Pacific: +86 0 400 820 6015
UK: +44 800 267 666

For additional support numbers please visit www.te.com

## BSTS/BSTS-FR (Continued)

### Product Dimensions

| Size | Inside Diameter | | Wall Thickness (Nominal) | |
|---|---|---|---|---|
| | Minimum Expanded as Supplied | Maximum Recovered After Heating | Expanded as Supplied | Recovered After Heating*** |
| BSTS-03 | 7.62 [0.300] | 2.54 [0.100] | 0.63 [0.025] | 1.78 [0.070] |
| BSTS-04 | 10.16 [0.400] | 3.81 [0.150] | 0.63 [0.025] | 1.78 [0.070] |
| BSTS-07 | 19.05 [0.750] | 5.59 [0.220] | 0.76 [0.030] | 2.41 [0.095] |
| BSTS-11 | 27.94 [1.100] | 9.52 [0.375] | 1.02 [0.040] | 3.05 [0.120] |
| BSTS-13 | 33.02 [1.300] | 9.52 [0.375] | 0.89 [0.035] | 3.05 [0.120] |
| BSTS-15 | 38.10 [1.500] | 12.70 [0.500] | 1.27 [0.050] | 3.56 [0.140] |
| BSTS-17 | 43.18 [1.700] | 12.70 [0.500] | 1.14 [0.045] | 3.56 [0.140] |
| BSTS-20 | 50.80 [2.000] | 19.05 [0.750] | 1.27 [0.050] | 3.94 [0.160] |
| BSTS-27 | 65.58 [2.700] | 22.86 [0.900] | 1.27 [0.050] | 3.94 [0.160] |
| BSTS-30 | 76.20 [3.000] | 31.75 [1.250] | 1.27 [0.050] | 3.94 [0.160] |
| BSTS-35 | 88.90 [3.500] | 31.75 [1.250] | 1.27 [0.050] | 3.94 [0.160] |
| BSTS-40 | 101.60 [4.000] | 44.45 [1.750] | 1.27 [0.050] | 3.94 [0.160] |
| BSTS-45 | 114.30 [4.500] | 44.45 [1.750] | 1.27 [0.050] | 3.94 [0.160] |

***Wall thickness will be less if tubing recovery is restricted during shrinkage.

### Ordering Information

| | | |
|---|---|---|
| Color | Standard | Black |
| | Nonstandard | White, Yellow, Red and Clear (Clear is non-flame retardant) |
| Size selection | Always order the largest size that will shrink snugly over the component to be covered. Special order sizes are available upon request. | |
| Standard packaging | 1.2-meter [4-foot] or 7.5-meter [25-foot] lengths. | |
| Ordering description | See below. | |

### Part Numbering System

**BSTS - _ _ x _ _ / _ / _**

- **"NM"** - no mark
- **Color**
  - Black / leave blank (standard)
  - White / WHT
  - Red / RED
  - Clear / CL
- **"FR"** - flame-retardant
- **Length** in feet (4 and 25 feet standard)
- **"M"** medium wall
- **Size**
- **Family**

**Example: BSTS-11X4/NM**



Catalog 1654025
Revised 3-13

www.te.com

Dimensions are shown for reference purposes only. Specifications subject to change.

Dimensions are in millimeters unless otherwise specified.

USA: +1 800 522 6752
Asia Pacific: +86 0 400 820 6015
UK: +44 800 267 666

For additional support numbers please visit www.te.com

## CGPE-105

### Brightly Colored, Shiny, Non-Flame-Retardant Polyolefin Tubing

### Product Facts

- Bright, shiny surface; clear version offers exceptional clarity
- Can be easily hot-stamped
- Economical, yet offers the improved performance of a crosslinked material
- Conforms to substrates more uniformly and with less longitudinal change than most PVC-based materials
- RoHS compliant

### Applications

Attractive covering for many automotive, appliance, and consumer-goods applications. Commercial grade tubing for applications where a flame-retardant product is not needed. Provides both insulation and protection of components and wires while also providing a smooth, glossy finish with a choice of seven colors as well as clear. Exceptional transparency of clear CGPE-105 makes it a well-suite choice for protecting marked surfaces.

### Installation

Minimum shrink temperature: 85°C [185°F]

Minimum full recovery temperature: 110°C [230°F] for black; 100°C [212°F] for all other colors and clear

### Operating Temperature Range

-70°C to 105°C
[-94°F to 221°F]

### Specifications/Approvals

| Series | TE |
|---|---|
| CGPE-105 | CGPE-105 SCD |

| Available in: | Americas | Europe | Asia Pacific |
|---|---|---|---|
| | ■ | | ■ |





Catalog 1654025
Revised 3-13

www.te.com

Dimensions are shown for reference purposes only. Specifications subject to change.

Dimensions are in millimeters unless otherwise specified.

USA: +1 800 522 6752
Asia Pacific: +86 0 400 820 6015
UK: +44 800 267 666

For additional support numbers please visit www.te.com

## CGPE-105 (Continued)

### Product Dimensions

| Size | Inside Diameter | | Recovered Wall Thickness** |
|---|---|---|---|
| | Minimum Expanded as Supplied | Maximum Recovered After Heating | After Heating |
| 3/64 | 1.2 [0.046] | 0.6 [0.023] | 0.40 ± 0.08 [0.016 ± 0.003] |
| 1/16 | 1.6 [0.063] | 0.8 [0.031] | 0.43 ± 0.08 [0.017 ± 0.003] |
| 3/32 | 2.4 [0.093] | 1.2 [0.046] | 0.51 ± 0.08 [0.020 ± 0.003] |
| 1/8 | 3.2 [0.125] | 1.6 [0.062] | 0.51 ± 0.08 [0.020 ± 0.003] |
| 3/16 | 4.8 [0.187] | 2.4 [0.093] | 0.51 ± 0.08 [0.020 ± 0.003] |
| 1/4 | 6.4 [0.250] | 3.2 [0.125] | 0.64 ± 0.08 [0.025 ± 0.003] |
| 3/8 | 9.5 [0.375] | 4.8 [0.187] | 0.64 ± 0.08 [0.025 ± 0.003] |
| 1/2 | 12.7 [0.500] | 6.4 [0.250] | 0.64 ± 0.08 [0.025 ± 0.003] |
| 3/4 | 19.1 [0.750] | 9.5 [0.375] | 0.76 ± 0.08 [0.030 ± 0.003] |
| 1 | 25.4 [1.000] | 12.7 [0.500] | 0.89 ± 0.12 [0.035 ± 0.005] |
| 1 1/2 | 38.1 [1.500] | 19.1 [0.750] | 1.02 ± 0.15 [0.040 ± 0.006] |
| 2 | 50.8 [2.000] | 25.4 [1.000] | 1.14 ± 0.18 [0.045 ± 0.007] |

**Wall thickness will be less if tubing recovery is restricted during shrinkage.

### Ordering Information

| | |
|---|---|
| Color | Black (-0), White (-9), Clear (-X), Red (-2), Bue (-6), Yellow (-4)<br>Green (-5), Violet (-7) |
| Size selection | Always order the largest size that will shrink snugly over the component to be covered.<br>Special order sizes are available upon request. |
| Standard packaging | On spools. |
| Ordering description | Specify product name, size and color (for example, CGPE-105-1/4-0). |

## CGPT

### General Purpose, Flame-Retardant* Polyolefin Tubing

### Product Facts

- 2:1 and 3:1 shrink ratio
- Very good chemical and solvent resistance
- Flexible
- Excellent physical and electrical performance
- RoHS compliant

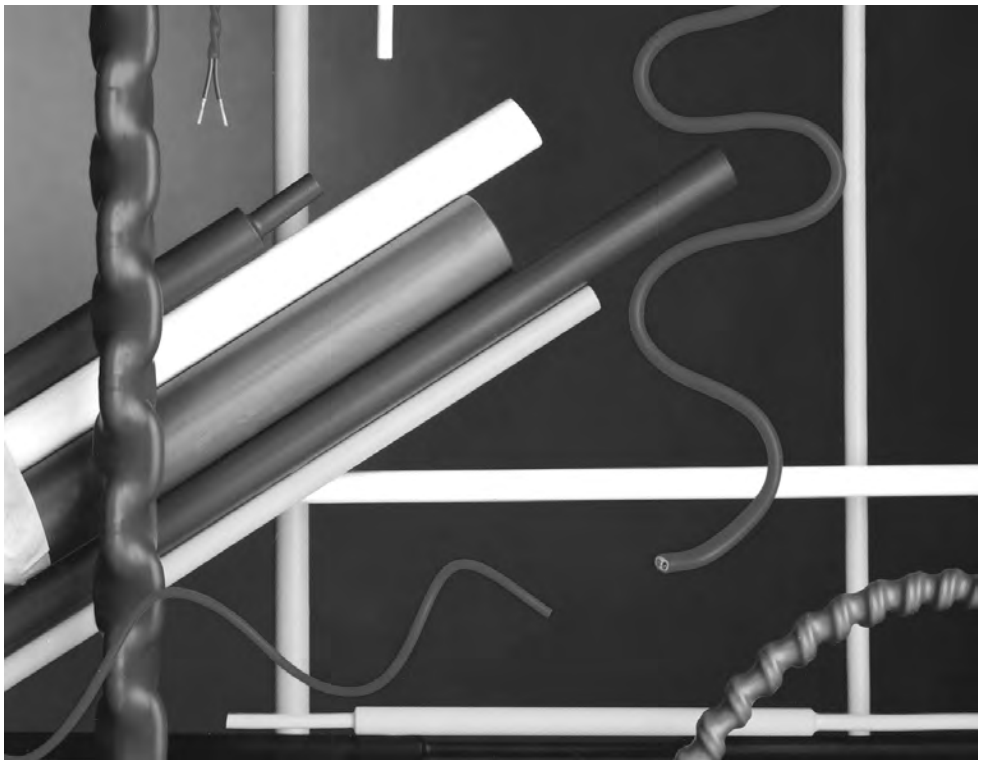

### Applications

CGPT is a tough, flexible, general purpose polyolefin tubing with good resistance to common fluids and solvents and a high dielectric strength. Its unique blend of chemical, electrical, and physical properties makes it suitable for a wide range of applications, including electrical insulation, strain relief, cable bundling, color-coding and identification of wires, cables, pipes, and electrical and electronic components, and mechanical protection.

### Installation

Minimum shrink temperature: 80°C [176°F]

Minimum full recovery temperature: 120°C [248°F]

### Operating Temperature Range

-40°C to 135°C
[-40°F to 275°F]

### Specifications/Approvals

| Series | UL | CSA | TE |
|---|---|---|---|
| CGPT | E35586<br>600 V, 125°C | LR31929<br>600 V, 125°C | RW-2059 |

*Clear product (-X) is not flame-retardant.

| Available in: | Americas | Europe | Asia Pacific |
|---|---|---|---|
| | | ■ | |





Catalog 1654025
Revised 3-13

www.te.com

Dimensions are shown for reference purposes only. Specifications subject to change.

Dimensions are in millimeters unless otherwise specified.

USA: +1 800 522 6752
Asia Pacific: +86 0 400 820 6015
UK: +44 800 267 666

For additional support numbers please visit www.te.com

## CGPT (Continued)

### Product Dimensions

| Size | Inside Diameter | | Recovered Wall Thickness** |
|---|---|---|---|
| | Minimum Expanded as Supplied | Maximum Recovered After Heating | After Heating |
| **2:1** | | | |
| 1.2/06 | 1.2 [0.046] | 0.6 [0.023] | 0.45 ± 0.12 [0.018 ± 0.005] |
| 1.6/0.8 | 1.6 [0.062] | 0.8 [0.031] | 0.45 ± 0.12 [0.018 ± 0.005] |
| 2.4/1.2 | 2.4 [0.093] | 1.2 [0.046] | 0.50 ± 0.12 [0.019 ± 0.005] |
| 3.2/1.6 | 3.2 [0.125] | 1.6 [0.062] | 0.50 ± 0.12 [0.019 ± 0.005]*** |
| 4.8/2.4 | 4.8 [0.187] | 2.4 [0.093] | 0.50 ± 0.12 [0.019 ± 0.005]*** |
| 6.4/3.2 | 6.4 [0.250] | 3.2 [0.125] | 0.65 ± 0.15 [0.026 ± 0.006]*** |
| 9.5/4.8 | 9.5 [0.375] | 4.8 [0.187] | 0.65 ± 0.15 [0.026 ± 0.006]*** |
| 12.7/6.4 | 12.7 [0.500] | 6.4 [0.250] | 0.65 ± 0.15 [0.026 ± 0.006]*** |
| 19/9.5 | 19.0 [0.748] | 9.5 [0.375] | 0.75 ± 0.15 [0.029 ± 0.006]*** |
| 25.4/12.7 | 25.4 [1.000] | 12.7 [0.500] | 0.90 ± 0.20 [0.035 ± 0.008]*** |
| 32/16 | 32.0 [1.250] | 16.0 [0.630] | 0.95 ± 0.20 [0.037 ± 0.008] |
| 38/19 | 38.0 [1.496] | 19.0 [0.748] | 1.00 ± 0.20 [0.039 ± 0.008]*** |
| 51/26 | 51.0 [2.000] | 26.0 [1.000] | 1.15 ± 0.25 [0.045 ± 0.010] |
| 76/38 | 76.0 [2.992] | 38.0 [1.496] | 1.25 ± 0.25 [0.049 ± 0.010] |
| 102/51 | 102.0 [4.016] | 51.0 [2.008] | 1.40 ± 0.30 [0.055 ± 0.012] |
| **3:1** | | | |
| 1.5/0.5 | 1.5 [0.059] | 0.5 [0.020] | 0.45 ± 0.12 [0.018 ± 0.005] |
| 3/1 | 3.0 [0.118] | 1.0 [0.040] | 0.55 ± 0.12 [0.022 ± 0.005] |
| 6/2 | 6.0 [0.236] | 2.0 [0.079] | 0.65 ± 0.12 [0.026 ± 0.005] |
| 9/3 | 9.0 [0.354] | 3.0 [0.118] | 0.75 ± 0.15 [0.030 ± 0.006] |
| 12/4 | 12.0 [0.472] | 4.0 [0.157] | 0.75 ± 0.15 [0.030 ± 0.006] |
| 18/6 | 18.0 [0.709] | 6.0 [0.236] | 0.85 ± 0.15 [0.033 ± 0.006] |
| 24/8 | 24.0 [0.945] | 8.0 [0.315] | 1.00 ± 0.20 [0.039 ± 0.008] |
| 39/13 | 39.0 [1.540] | 13.0 [0.512] | 1.15 ± 0.25 [0.045 ± 0.010] |

**Wall thickness will be less if tubing recovery is restricted during shrinkage.

### Ordering Information

| | | |
|---|---|---|
| Color | Standard | Black (-0), White (-9), Red (-2), Blue (-6), Yellow (-4), Green (-5), Brown (-1), Grey (-8), Clear (-X), Yellow/Green (-45) as indicated by an *** |
| | Nonstandard | Orange (-3), Violet (-7), in 2:1 sizes, 1.2/0.6 through 51/26 only. |
| Size selection | Always order the largest size that will shrink snugly over the component to be covered. Special order sizes are available upon request. | |
| Standard packaging**** | On spools. | |
| Ordering description | Specify product name, size and color (for example, CGPT 4.8/2.4-0). | |

****Available in the convenient RaySpool packaging/dispensing system for sizes:
2:1 - 2.4/1.2 up to 25.4/12.7
3:1 - 3/1 up to 24/8

## CRN

### Semirigid, Flame-Retardant, Polyolefin Tubing

### Product Facts

- 2:1 shrink ratio
- High abrasion resistance
- Transfer of flex stress away from typically weak points such as solder and crimp joints, helping ensure a reliable connection
- Flame-retardance (black only)
- Outstanding physical and electrical performance
- Excellent chemical and solvent-resistance properties
- RoHS compliant

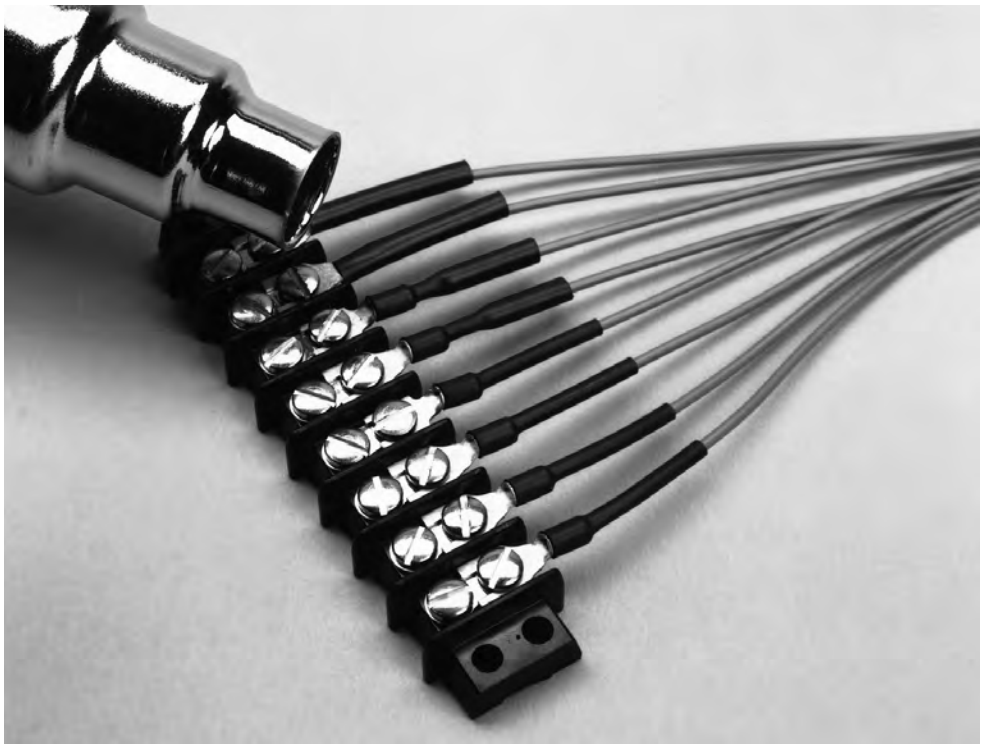



### Applications

Well-suited for wire strain-relief applications such as soldered or crimped connections, wire splices, and terminations. Provides mechanical protection for delicate components. Can be used for component packaging and for rugged marking of cables.

### Installation

Minimum shrink temperature: 110°C [230°F]

Minimum full recovery temperature: 135°C [275°F]

### Operating Temperature Range

-55°C to 135°C
[-67°F to 275°F]

### Specifications/Approvals

| Series | UL | CSA | Military | TE |
|---|---|---|---|---|
| CRN Type 1 (black) | E35586<br>600 V, 125°C | LR31929<br>(black only)<br>600 V, 125°C | AMS-DTL-23053/6*, Class I | RT-360, Type 1<br>RK-6003 |
| CRN Type 2 (clear) | — | — | AMS-DTL-23053/6*, Class 2 | RT-360, Type 2 |

*Formerly MIL-I-23053/6 and MIL-DTL-23053/6.

| Available in: | Americas | Europe | Asia Pacific |
|---|---|---|---|
| | ■ | ■ | ■ |



Catalog 1654025
Revised 3-13

www.te.com

Dimensions are shown for reference purposes only. Specifications subject to change.

Dimensions are in millimeters unless otherwise specified.

USA: +1 800 522 6752
Asia Pacific: +86 0 400 820 6015
UK: +44 800 267 666

For additional support numbers please visit www.te.com

## CRN (Continued)

### Product Dimensions

| Size | Inside Diameter | | Recovered Wall Thickness** |
|---|---|---|---|
| | Minimum Expanded as Supplied | Maximum Recovered After Heating | After Heating |
| 3/64 | 1.2 [0.046] | 0.6 [0.023] | 0.51 ± 0.08 [0.020 ± 0.003] |
| 1/16 | 1.6 [0.063] | 0.8 [0.031] | 0.51 ± 0.08 [0.020 ± 0.003] |
| 3/32 | 2.4 [0.093] | 1.2 [0.046] | 0.51 ± 0.08 [0.020 ± 0.003] |
| 1/8 | 3.2 [0.125] | 1.6 [0.062] | 0.51 ± 0.08 [0.020 ± 0.003] |
| 3/16 | 4.8 [0.187] | 2.4 [0.093] | 0.64 ± 0.08 [0.025 ± 0.003] |
| 1/4 | 6.4 [0.250] | 3.2 [0.125] | 0.64 ± 0.08 [0.025 ± 0.003] |
| 3/8 | 9.5 [0.375] | 4.8 [0.187] | 0.76 ± 0.08 [0.030 ± 0.003] |
| 1/2 | 12.7 [0.500] | 6.4 [0.250] | 0.76 ± 0.08 [0.030 ± 0.003] |
| 3/4 | 19.1 [0.750] | 9.5 [0.375] | 0.89 ± 0.12 [0.035 ± 0.005] |

**Wall thickness will be less if tubing recovery is restricted during shrinkage.

### Ordering Information

| | | |
|---|---|---|
| Color | Standard | Black (-0) |
| | Nonstandard | Clear (-X, not flame-retardant) |
| Size selection | Always order the largest size that will shrink snugly over the component to be covered. Special order sizes are available upon request. | |
| Standard packaging | In 1.2-meter [4-foot] lengths. | |
| Ordering description*** | Specify product name, size and color (for example, CRN 1/4-0). | |

***Europe only. For supply to MIL spec., add -MS to ordering description.



Dimensions are shown for reference purposes only. Specifications subject to change.

Dimensions are in millimeters unless otherwise specified.

USA: +1 800 522 6752
Asia Pacific: +86 0 400 820 6015
UK: +44 800 267 666

For additional support numbers please visit www.te.com

## DCPT

### Flexible, Flame-Retardant, Dual-Color, Polyolefin Tubing

### Product Facts

- 2:1 and 3:1 shrink ratio
- Dual colors (yellow/green) for instant identification
- Co-extrusion of tubing colors, giving color permanence superior to that of conventional ink marking
- Flame-retardance
- Flexibility: able to conform to irregular shapes
- Excellent physical, chemical, and electrical properties that meet industry standards for highly reliable, general purpose tubing
- RoHS compliant

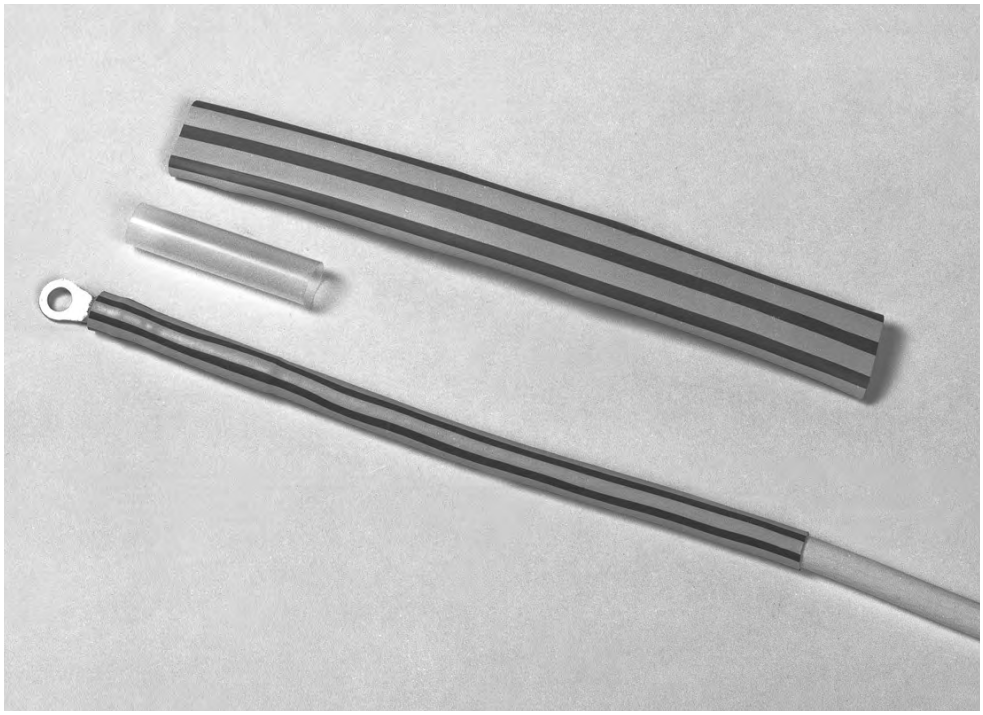



### Applications

Used to identify “ground” on wires and in cables, and to jacket and insulate light-duty harnesses.

Easily marked by conventional techniques for additional identification of wires and cables.

### Installation

Minimum shrink temperature: 95°C [203°F]

Minimum full recovery temperature: 120°C [248°F]

### Operating Temperature Range

-55°C to 135°C
[-67°F to 275°F]

### Specifications/Approvals

| Series | UL | CSA | Military | Agency | TE |
|---|---|---|---|---|---|
| DCPT | E35586<br>600 V, 125°C | LR31929<br>600 V, 125°C | VG 95343 Pt 5 Type A | AFS 2270<br>DIN 29807<br>VDE 0341<br>Pt 9005 Type A | RW-2056 |

| Available in: | Americas | Europe | Asia Pacific |
|---|---|---|---|
| | ■ | ■ | ■ |



Catalog 1654025
Revised 3-13

www.te.com

Dimensions are shown for reference purposes only. Specifications subject to change.

Dimensions are in millimeters unless otherwise specified.

USA: +1 800 522 6752
Asia Pacific: +86 0 400 820 6015
UK: +44 800 267 666

For additional support numbers please visit www.te.com

## DCPT (Continued)

### Product Dimensions

| Size | Inside Diameter | | Recovered Wall Thickness** |
|---|---|---|---|
| | Minimum Expanded as Supplied | Maximum Recovered After Heating | After Heating |
| **2:1** | | | |
| 3/1.5 | 3.0 [0.118] | 1.5 [0.059] | 0.51 ± 0.10 [0.020 ± 0.004] |
| 6/3 | 6.0 [0.236] | 3.0 [0.118] | 0.58 ± 0.10 [0.023 ± 0.004] |
| 8/4 | 8.0 [0.315] | 4.0 [0.158] | 0.64 ± 0.10 [0.025 ± 0.004] |
| 10/5 | 10.0 [0.394] | 5.0 [0.197] | 0.64 ± 0.10 [0.025 ± 0.004] |
| 12/6 | 12.0 [0.472] | 6.0 [0.236] | 0.64 ± 0.10 [0.025 ± 0.004] |
| 19/9 | 19.0 [0.748] | 9.0 [0.354] | 0.76 ± 0.12 [0.030 ± 0.005] |
| 26/13 | 26.0 [1.024] | 13.0 [0.512] | 0.89 ± 0.12 [0.035 ± 0.005] |
| 38/19 | 38.0 [1.500] | 19.0 [0.748] | 1.00 ± 0.12 [0.039 ± 0.005] |
| 51/19 | 51.0 [2.000] | 19.0 [0.748] | 1.02 ± 0.15 [0.040 ± 0.006] |
| **3:1 (Europe only)** | | | |
| 3/1 | 3.0 [0.118] | 1.0 [0.039] | 0.55 ± 0.10 [0.022 ± 0.004] |
| 6/2 | 6.0 [0.236] | 2.0 [0.079] | 0.65 ± 0.10 [0.026 ± 0.004] |
| 9/3 | 9.0 [0.354] | 3.0 [0.118] | 0.75 ± 0.15 [0.030 ± 0.006] |
| 12/4 | 12.0 [0.472] | 4.0 [0.157] | 0.75 ± 0.15 [0.030 ± 0.006] |
| 18/6 | 18.0 [0.709] | 6.0 [0.236] | 0.85 ± 0.15 [0.033 ± 0.006] |
| 24/8 | 24.0 [0.945] | 8.0 [0.315] | 1.00 ± 0.20 [0.039 ± 0.008] |
| 39/13 | 39.0 [1.535] | 13.0 [0.512] | 1.15 ± 0.20 [0.045 ± 0.008] |

**Wall thickness will be less if tubing recovery is restricted during shrinkage.

### Ordering Information

| | | |
|---|---|---|
| Color | Standard | Yellow/green stripe (-45) |
| Size selection | Always order the largest size that will shrink snugly over the component to be covered. Special order sizes are available upon request. | |
| Standard packaging | On spools. | |
| Ordering description | Specify product name, size and color (for example, DCPT 8/4-45). | |

## DR-25

### Heat-Shrinkable, Flexible, Chemical and Abrasion Resistant Tubing

### Product Facts

- Flame-retardant
- System 25 tubing
- Shrink ratio 2:1
- RoHS compliant

### Applications

Specially formulated for optimum high-temperature fluid resistance, and long term heat resistance. Resistant to aviation and diesel fuels, hydraulic fluids and lubricating oils.

Particularly suitable as a jacketing material for military ground vehicle cables and harnesses. It is also well suited for the demands of motorsport cable harnesses. When used in conjunction with System 25 heat-shrinkable molded shapes and S1125 high performance adhesive, these products provide a complete cable harness system.

### Installation

Minimum shrink temperature: 150°C [302°F]

Minimum full recovery temperature: 175°C [347°F]

### Operating Temperature Range

-75°C to 150°C
[-103°F to 302°F]
(per VG 95343 Part 5 Type D)

### Specifications/Approvals

| Series | Military | TE |
|---|---|---|
| DR-25 | AMS-DTL-23053/16*<br>VG95343 Part 5 Type D<br>VDE 0341/Pt 9005<br>Def Stan 59-97 Issue 3 Type 6B<br>BS 4G-198 Part 3 10A | RT-1116<br>RK-6008/1 |

*Formerly MIL-I-23053/16 and MIL-DTL-23053/16.

| Available in: | Americas | Europe | Asia Pacific |
|---|---|---|---|
| | ■ | ■ | ■ |





Catalog 1654025
Revised 3-13

www.te.com

Dimensions are shown for reference purposes only. Specifications subject to change.

Dimensions are in millimeters unless otherwise specified.

USA: +1 800 522 6752
Asia Pacific: +86 0 400 820 6015
UK: +44 800 267 666

For additional support numbers please visit www.te.com

## DR-25 (Continued)

### Product Dimensions

| MIL Spec No. | Size | Inside Diameter: Minimum Expanded as Supplied | Inside Diameter: Maximum Recovered After Heating | Recovered Wall Thickness** After Heating |
|---|---|---|---|---|
| — | 1/8 | 3.2 [0.125] | 1.6 [0.062] | 0.76 ± 0.15 [0.030 ± 0.006] |
| — | 3/16 | 4.8 [0.187] | 2.4 [0.093] | 0.84 ± 0.15 [0.033 ± 0.006] |
| -001 | 1/4 | 6.4 [0.250] | 3.2 [0.125] | 0.89 ± 0.15 [0.035 ± 0.006] |
| -002 | 3/8 | 9.5 [0.375] | 4.8 [0.187] | 1.02 ± 0.20 [0.040 ± 0.008] |
| -003 | 1/2 | 12.7 [0.500] | 6.4 [0.250] | 1.22 ± 0.20 [0.048 ± 0.008] |
| -004 | 3/4 | 19.0 [0.748] | 9.5 [0.375] | 1.45 ± 0.28 [0.057 ± 0.011] |
| -005 | 1 | 25.4 [1.000] | 12.7 [0.500] | 1.78 ± 0.28 [0.070 ± 0.011] |
| -006 | 1 1/2 | 38.0 [1.500] | 19.1 [0.750] | 2.41 ± 0.41 [0.095 ± 0.016] |
| -007 | 2 | 51.0 [2.000] | 25.4 [1.000] | 2.79 ± 0.41 [0.110 ± 0.016] |
| -008 | 3 | 76.0 [3.000] | 38.0 [1.500] | 3.18 ± 0.50 [0.125 ± 0.020] |
| -009 | 4 | 101.6 [4.000] | 50.8 [2.00] | 3.55 ± 0.50 [0.140 ± 0.020] |

**Wall thickness will be less if tubing recovery is restricted during shrinkage.

### Ordering Information

| | |
|---|---|
| Color | Standard Black (-0) |
| Size selection | Always order the largest size that will shrink snugly over the component to be covered. Special order sizes are available upon request. |
| Standard packaging | On spools. |
| Ordering description*** | Specify product name, size and color (for example, DR-25 1/8-0) |

***Europe only. For supply to Def Stan and BS add -DS or -BS to ordering description.

## DR-25-TW

### Heat-Shrinkable, Flexible, Thin Wall, Chemical and Abrasion Resistant Tubing

The DR-25-TW flexible fluid resistant elastomeric tubing, developed from DR-25, is a thin wall version ideal for use where space and weight saving are important. It also offers excellent resistance to fluids at high temperature and to long-term heat exposure. It is fast to install and may be used with other products from the TE Raychem System 25 range of compact and tough harnessing systems. The product is printed with the product description and size.

### Key Features

- **Operating temperature range -75˚C to +150˚C (-103˚F to +302˚F) (per VG 95343 Part 5 Type D)**
- **Flame-retardant**
- **System 25 tubing**
- **Shrink ratio 2:1**
- **Thin wall**

### Applications

Specially formulated for optimum high temperature fluid resistance and long term heat resistance. Resistant to aviation and diesel fuels, hydraulic fluids and lubricating oils. Particularly suitable as a jacketing material for military ground vehicle cables and harnesses. It is also ideally suited for the demands of motorsport cable harnesses. When used in conjunction with Raychem brand System 25 heat-shrinkable moulded shapes and S1125 high performance adhesive, these products provide a complete cable harness system.

### Installation

Minimum shrink temperature: 125°C [257°F]

Minimum full recovery temperature: 175°C [347°F]

### Specifications/Approvals

| Series | Military | Raychem |
|---|---|---|
| DR-25-TW | VG95343 Part 5 Type D | RK-6008/2 |

| Available in: | Americas | Europe | Asia Pacific |
|---|---|---|---|
| | ■ | ■ | ■ |





Catalog 1654025
Revised 3-13

www.te.com

Dimensions are shown for reference purposes only. Specifications subject to change.

Dimensions are in millimeters unless otherwise specified.

USA: +1 800 522 6752
Asia Pacific: +86 0 400 820 6015
UK: +44 800 267 666

For additional support numbers please visit www.te.com

## DR-25-TW (Continued)

### Product Dimensions

| Size | Inside Diameter | | Recovered Wall Thickness |
|---|---|---|---|
| | Minimum Inside Diameter as Supplied | Maximum Inside Diameter After Recovery | |
| 3/32 | 2.4 (0.094) | 1.2 (0.047) | 0.51 ± 0.08 |
| 1/8 | 3.2 (0.125) | 1.6 (0.062) | 0.51 ± 0.10 |
| 3/16 | 4.8 (0.187) | 2.4 (0.093) | 0.51 ± 0.10 |
| 1/4 | 6.4 (0.250) | 3.2 (0.125) | 0.64 ± 0.10 |
| 3/8 | 9.5 (0.375) | 4.8 (0.187) | 0.64 ± 0.10 |
| 1/2 | 12.7 (0.500) | 6.4 (0.250) | 0.64 ± 0.10 |
| 3/4 | 19.0 (0.748) | 9.5 (0.375) | 0.76 ± 0.12 |
| 1 | 25.4 (1.000) | 12.7 (0.500) | 0.89 ± 0.16 |
| 1 1/2 | 38.0 (1.500) | 19.0 (0.748) | 1.02 ± 0.18 |

### Ordering Information

| | |
|---|---|
| Color | Standard Black (-0) |
| Size selection | Always order the largest size that will shrink snugly over the component to be covered. Special order sizes are available upon request. |
| Standard packaging | On spools |
| Ordering description | Specify product name, size and color (for example, DR-25-TW-1/8-0-SP). |



Dimensions are shown for reference purposes only. Specifications subject to change.

Dimensions are in millimeters unless otherwise specified.

USA: +1 800 522 6752
Asia Pacific: +86 0 400 820 6015
UK: +44 800 267 666

For additional support numbers please visit www.te.com

## DWP-125

### Flexible, High-Shrink-Ratio, Adhesive-Lined, Polyolefin Tubing

### Product Facts

- 3:1 shrink ratio allows for insulation and sealing of irregular shapes
- Medium wall provides increased mechanical protection while maintaining flexibility when installed
- Adhesive bonds to a wide variety of plastics, rubber, and metals, including polyethylene, neoprene, and steel
- RoHS compliant

### Applications

Environmentally seals and protects a wide variety of electrical applications, including wire splices, breakouts, and connector-to-cable transitions. Suitable for applications where UL recognized/CSA certified adhesive-lined tubing is required.

### Installation

Minimum shrink temperature: 80°C [176°F]

Minimum full recovery temperature: 125°C [257°F]

### Operating Temperature Range

-40°C to 110°C
[-40°F to 230°F]

### Specifications/Approvals

| Series | UL | CSA | Military | TE |
|---|---|---|---|---|
| DWP-125 | E35586<br>600 V, 125°C | LR31929<br>600 V, 125°C | AMS-DTL-23053/4*<br>Class 3 (colors only) | DWP-125 SCD |

*Formerly MIL-I-23053/4 and MIL-DTL-23053/4. Meets the material properties except for Sealing Efficiency.

| Available in: | Americas | Europe | Asia Pacific |
|---|---|---|---|
| | ■ | ■ | ■ |



Catalog 1654025
Revised 3-13

www.te.com

Dimensions are shown for reference purposes only. Specifications subject to change.

Dimensions are in millimeters unless otherwise specified.

USA: +1 800 522 6752
Asia Pacific: +86 0 400 820 6015
UK: +44 800 267 666

For additional support numbers please visit www.te.com

## DWP-125 (Continued)

### Product Dimensions

| Size | Inside Diameter | | Recovered Wall Thickness* | |
|---|---|---|---|---|
| | Minimum Expanded as Supplied | Maximum Recovered After Heating | Nominal Total Wall After Heating | Nominal Adhesive Wall After Heating |
| 1/8 | 3.2 [0.125] | 1.0 [0.040] | 1.07 [0.042] | 0.07 [0.018] |
| 3/16 | 4.8 [0.187] | 1.5 [0.060] | 1.32 [0.052] | 0.17 [0.043] |
| 1/4 | 6.4 [0.250] | 2.0 [0.080] | 1.45 [0.057] | 0.56 [0.022] |
| 3/8 | 9.5 [0.375] | 3.1 [0.120] | 1.65 [0.065] | 0.68 [0.027] |
| 1/2 | 12.7 [0.500] | 4.0 [0.157] | 1.70 [0.067] | 0.27 [0.068] |
| 3/4 | 19.1 [0.750] | 5.8 [0.230] | 2.03 [0.080] | 0.76 [0.030] |
| 1 | 25.4 [1.000] | 8.1 [0.320] | 2.50 [0.100] | 0.76 [0.030] |

*Wall thickness will be less if tubing recovery is restricted during shrinkage.

### Ordering Information

| | | |
|---|---|---|
| Color | Standard | Black (-0) |
| | Nonstandard | White (-9), Red (-2), Blue (-6), Yellow (-4), Green (-5), Clear (-X, non-flame-retardant jacket). Other colors available upon request. |
| Size selection | Always order the largest size that will shrink snugly over the component to be covered. Special order sizes are available upon request. | |
| Standard packaging | In 1.2-meter [4-foot] lengths. | |
| Ordering description | Specify product name, size and color (for example, DWP-125 1/4-0). | |

## ES1000

### Clear, High-Shrink-Ratio, Adhesive-Lined, Semirigid Polyolefin Tubing

### Product Facts

- 4:1 shrink ratio allows a few sizes to cover a wide range of splice and component diameters
- Mechanically tough tubing provides strain relief and abrasion protection of wire splices, terminals and other components
- Thick adhesive liner forms an effective barrier against fluids and moisture and performs well at an extended temperature range
- UL recognized
- RoHS compliant

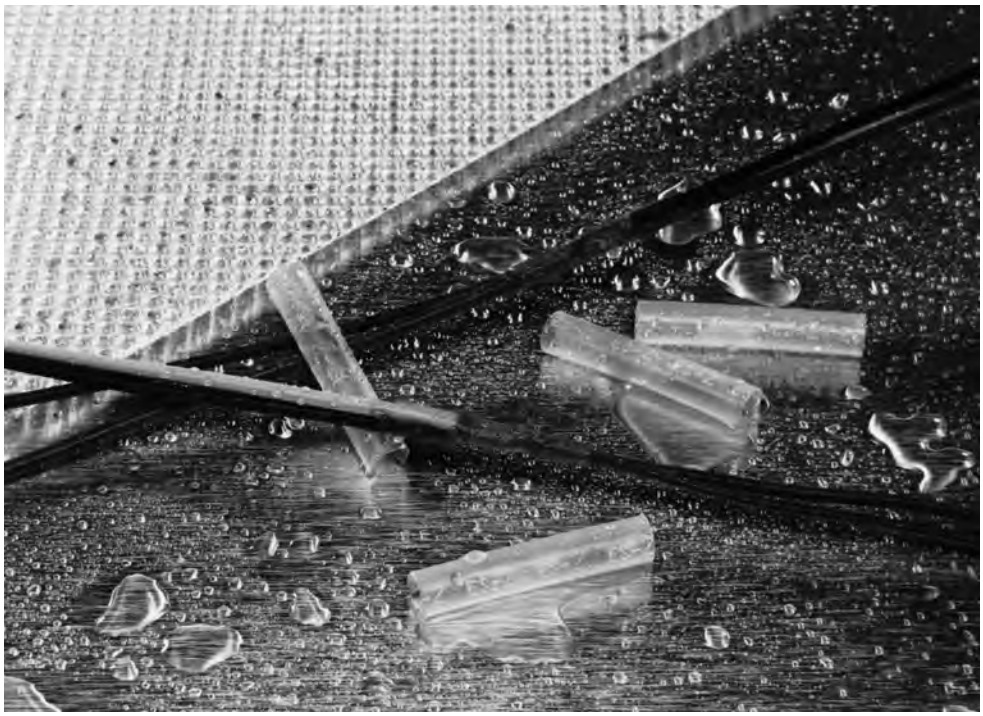

### Applications

Specially designed for environmental sealing and electrical insulation of wire splices, terminations, and components where see-through inspection is required.

### Installation

Minimum shrink temperature: 110°C [230°F]

Minimum full recovery temperature: 135°C [275°F]

### Operating Temperature Range

-40°C to 130°C
[-40°F to 266°F]

### Specifications/Approvals

| Series | UL* | TE |
|---|---|---|
| ES1000 | E85381<br>600 V, 125°C | RT-1113 |

| Available in: | Americas | Europe | Asia Pacific |
|---|---|---|---|
| | ■ | | ■ |





Catalog 1654025
Revised 3-13

www.te.com

Dimensions are shown for reference purposes only. Specifications subject to change.

Dimensions are in millimeters unless otherwise specified.

USA: +1 800 522 6752
Asia Pacific: +86 0 400 820 6015
UK: +44 800 267 666

For additional support numbers please visit www.te.com

## ES1000 (Continued)

### Product Dimensions

| Part Number | Inside Diameter (Including Core) | | Recovered Wall Thickness* | | |
|---|---|---|---|---|---|
| | Minimum Expanded as Supplied | Maximum Recovered After Heating | Minimum Total Wall After Heating | Minimum Jacket Wall After Heating | Minimum Adhesive Wall After Heating |
| ES1000-No.1 | 5.72 [0.225] | 1.27 [0.050] | 1.20 [0.047] | 0.64 [0.025] | 0.56 [0.022] |
| ES1000-No.2 | 7.44 [0.293] | 1.65 [0.065] | 1.52 [0.060] | 0.76 [0.030] | 0.76 [0.030] |
| ES1000-No.3 | 10.85 [0.427] | 2.41 [0.095] | 1.91 [0.075] | 0.89 [0.035] | 1.02 [0.040] |
| ES1000-No.4 | 17.78 [0.700] | 4.45 [0.175] | 2.41 [0.095] | 1.04 [0.041] | 1.37 [0.054] |

*Wall thickness will be less if tubing recovery is restricted during shrinkage.

### Ordering Information

| | |
|---|---|
| Color | Standard Clear (-X) |
| Size selection | Always order the largest size that will shrink snugly over the component to be covered. |
| Standard packaging | Cut pieces. |
| Marking | Tubing will be printed with its numbered size (such as ES-1, ES-2, ES-3, or ES-4). |
| Ordering description | Specify product name, numbered size, color, and cut length (for example, ES1000-NO. 2-X-50MM). |



Dimensions are shown for reference purposes only. Specifications subject to change.

Dimensions are in millimeters unless otherwise specified.

USA: +1 800 522 6752
Asia Pacific: +86 0 400 820 6015
UK: +44 800 267 666

For additional support numbers please visit www.te.com

## ES2000

### Flame-Retardant, High-Shrink-Ratio, Adhesive-Lined Semirigid Polyolefin Tubing

### Product Facts

- 4:1 shrink ratio allows a few sizes to cover a wide range of splice and component diameters
- Flame-retardant and mechanically tough, the tubing provides strain relief and abrasion protection of wire splices, terminals, and other components
- Thick adhesive liner forms an effective barrier against fluids and moisture and performs well at an extended temperature range
- UL recognized
- RoHS compliant

### Applications

Specially designed for environmental sealing and electrical insulation of wire splices, terminations, and components.

### Installation

Minimum shrink temperature: 110°C [230°F]

Minimum full recovery temperature: 135°C [275°F]

### Operating Temperature Range

-40°C to 130°C
[-40°F to 266°F]

### Specifications/Approvals

| Series | UL* | TE |
|---|---|---|
| ES2000 | E85381<br>600 V, 125°C | RT-1112 |

| Available in: | Americas | Europe | Asia Pacific |
|---|---|---|---|
| | ■ | | ■ |





Catalog 1654025
Revised 3-13

www.te.com

Dimensions are shown for reference purposes only. Specifications subject to change.

Dimensions are in millimeters unless otherwise specified.

USA: +1 800 522 6752
Asia Pacific: +86 0 400 820 6015
UK: +44 800 267 666

For additional support numbers please visit www.te.com

## ES2000 (Continued)

### Product Dimensions

| Part Number | Inside Diameter (Including Core) | | Recovered Wall Thickness* | | |
|---|---|---|---|---|---|
| | Minimum Expanded as Supplied | Maximum Recovered After Heating | Minimum Total Wall After Heating | Minimum Jacket Wall After Heating | Minimum Adhesive Wall After Heating |
| ES2000-No.1 | 5.72 [0.225] | 1.27 [0.050] | 1.20 [0.047] | 0.64 [0.025] | 0.56 [0.022] |
| ES2000-No.2 | 7.44 [0.293] | 1.65 [0.065] | 1.52 [0.060] | 0.76 [0.030] | 0.76 [0.030] |
| ES2000-No.3 | 10.85 [0.427] | 2.41 [0.095] | 1.91 [0.075] | 0.89 [0.035] | 1.02 [0.040] |
| ES2000-No.4 | 17.78 [0.700] | 4.45 [0.175] | 2.41 [0.095] | 1.04 [0.041] | 1.37 [0.054] |

*Wall thickness will be less if tubing recovery is restricted during shrinkage.

### Ordering Information

| | |
|---|---|
| Color | Standard Black (-0) |
| Size selection | Always order the largest size that will shrink snugly over the component to be covered. |
| Standard packaging | Cut pieces. |
| Marking | Tubing will be printed with its numbered size (such as ES-1, ES-2, ES-3, or ES-4). |
| Ordering description | Specify product name, numbered size, color, and cut length (for example, ES2000-NO. 2-0-50MM). |

## ES Caps

### High-Shrink-Ratio, Adhesive-Lined, Semirigid Polyolefin Caps

### Product Facts

- 4:1 shrink ratio allows a few sizes to cover a wide range of splice and component diameters
- Mechanically tough jacket provides strain relief and abrasion protection
- Thick adhesive liner forms an effective barrier against fluids and moisture and performs well at an extended temperature range
- RoHS compliant

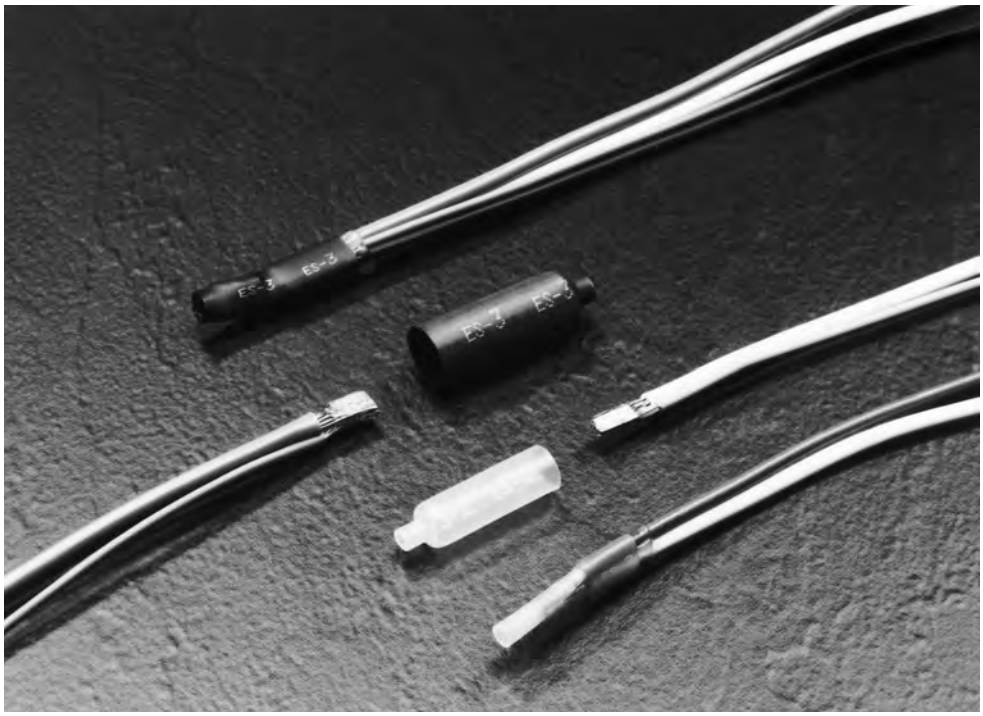

### Applications

Specially designed to provide mechanical and environmental protection of stub splices in electrical harnesses. Clear caps allow see-through inspection; black caps are flame-retardant.

### Installation

Minimum shrink temperature: 100°C [212°F]

Minimum full recovery temperature: 135°C [275°F]

### Operating Temperature Range

-40°C to 105°C
[-40°F to 221°F]

### Specifications/Approvals

| Series | UL* | TE |
|---|---|---|
| ES Caps | E85381<br>600 V, 125°C | RW-3006 |

| Available in: | Americas | Europe | Asia Pacific |
|---|---|---|---|
| | ■ | ■ | ■ |





Catalog 1654025
Revised 3-13

www.te.com

Dimensions are shown for reference purposes only. Specifications subject to change.

Dimensions are in millimeters unless otherwise specified.

USA: +1 800 522 6752
Asia Pacific: +86 0 400 820 6015
UK: +44 800 267 666

For additional support numbers please visit www.te.com

## ES Caps (Continued)

### Product Dimensions

| Part Number | Standard Length* as Supplied (Millimeters) | Inside Diameter (Including Core) | | Recovered Wall Thickness** | | |
|---|---|---|---|---|---|---|
| | | Minimum Expanded as supplied | Maximum Recovered After Heating | Minimum Total Wall After Heating | Minimum Jacket Wall After Heating | Minimum Adhesive Wall After Heating |
| ES Cap-No.1 | 30, 35 | 5.72 [0.225] | 1.27 [0.050] | 1.20 [0.047] | 0.64 [0.025] | 0.56 [0.022] |
| ES Cap-No.2 | 30, 35 | 7.44 [0.293] | 1.65 [0.065] | 1.52 [0.060] | 0.76 [0.030] | 0.76 [0.030] |
| ES Cap-No.3 | 40, 50 | 10.85 [0.427] | 2.41 [0.095] | 1.91 [0.075] | 0.89 [0.035] | 1.02 [0.040] |

*Other cap lengths available upon request.
**Wall thickness will be less if cap recovery is restricted during shrinkage.

### Ordering Information

| | | |
|---|---|---|
| Color | Standard | Black (-0), clear (-X) |
| Size selection | Always order the largest size that will shrink snugly over the component to be covered. Other cap lengths available on request. | |
| Standard packaging | In pieces. | |
| Marking | Caps will be marked with their numbered size (such as ES-1, ES-2, or ES-3). | |
| Ordering description | Specify product name, size, color, and length (for example, ES CAP-NO. 2-X-35MM). | |



Dimensions are shown for reference purposes only. Specifications subject to change.

Dimensions are in millimeters unless otherwise specified.

USA: +1 800 522 6752
Asia Pacific: +86 0 400 820 6015
UK: +44 800 267 666

For additional support numbers please visit www.te.com

## FL2500

### Fully Flame-Retardant, Adhesive-Lined, Polyolefin Heat-Shrinkable Tubing

### Product Facts

- **4:1 shrink ratio allows a few sizes to cover a wide range of wire terminations and components**
- **Flame-retardant tubing jacket and adhesive provide full flame-retardancy**
- **Fully flame-retardant and mechanically tough, the tubing provides strain relief and abrasion protection of wire splices, terminals and other components**
- **Thick high-performance adhesive lining offers permanent sealing of splices, fusible links, terminals and in-line components**
- **RoHS compliant**

### Applications

Tough flame-retardant polyolefin tubing lined with a flame-retardant adhesive provides the optimum solution for applications where full flame-retardancy is preferred or specified.

Rated to 135°C [275°F] for 3000 hours, FL2500 is suitable for use in the automotive harness market and other harsh environments. As the tubing shrinks, the adhesive lining melts and flows to fill all voids and create a complete seal against moisture, oils, chemicals and other fluids.

### Installation

Minimum shrink temperature: 110°C [230°F]

Minimum full recovery temperature: 135°C [275°F]

### Operating Temperature Range

-40°C to 135°C
[-40°F to 275°F]

### Specifications/Approvals

| Series | TE |
|---|---|
| FL2500 | FL2500 SCD |

| Available in: | Americas | Europe | Asia Pacific |
|---|---|---|---|
| | ■ | ■ | ■ |





Catalog 1654025
Revised 3-13

www.te.com

Dimensions are shown for reference purposes only. Specifications subject to change.

Dimensions are in millimeters unless otherwise specified.

USA: +1 800 522 6752
Asia Pacific: +86 0 400 820 6015
UK: +44 800 267 666

For additional support numbers please visit www.te.com

## FL2500 (Continued)

### Product Dimensions

| Part Number | Inside Diameter (Including Core) | | Recovered Wall Thickness* | |
|---|---|---|---|---|
| | Minimum Expanded as Supplied | Maximum Recovered After Heating | Total Wall After Heating | Minimum Adhesive Wall After Heating |
| FL2500-No. 1 | 7.62 [0.300] | 1.65 [0.065] | 1.52 ± 0.3 [0.060 ± 0.012] | 0.71 [0.028] |
| FL2500-No. 2 | 9.02 [0.355] | 2.29 [0.090] | 1.52 ± 0.3 [0.060 ± 0.012] | 0.71 [0.028] |
| FL2500-No. 3 | 11.56 [0.455] | 2.54 [0.100] | 2.29 ± 0.3 [0.090 ± 0.012] | 1.32 [0.052] |
| FL2500-No. 4 | 17.79 [0.700] | 4.45 [0.175] | 2.54 ± 0.3 [0.100 ± 0.012] | 1.35 [0.053] |

*Wall thickness will be less if tubing recovery is restricted during shrinkage.

### Ordering Information

| | |
|---|---|
| Color | Black (-0) with a white adhesive liner |
| Size selection | Always order the largest size that will shrink snugly over the component to be covered. |
| Standard packaging | Cut pieces. |
| Marking | Tubing will be marked with its numbered size (such as FL-1, FL-2, FL-3, or FL-4). |
| Ordering description | Specify product name, size, color, and cut length (for example, FL2500-NO.2-0-50MM). |



Dimensions are shown for reference purposes only. Specifications subject to change.

Dimensions are in millimeters unless otherwise specified.

USA: +1 800 522 6752
Asia Pacific: +86 0 400 820 6015
UK: +44 800 267 666

For additional support numbers please visit www.te.com

## HCTE

### Helical Convolex Tubing with a High Crush Resistance

### Product Facts

- Highly flame-retardant
- Highly flexible and fluid resistant
- Not heat-shrinkable
- High crush resistance
- System 300 conduit tubing
- RoHS compliant

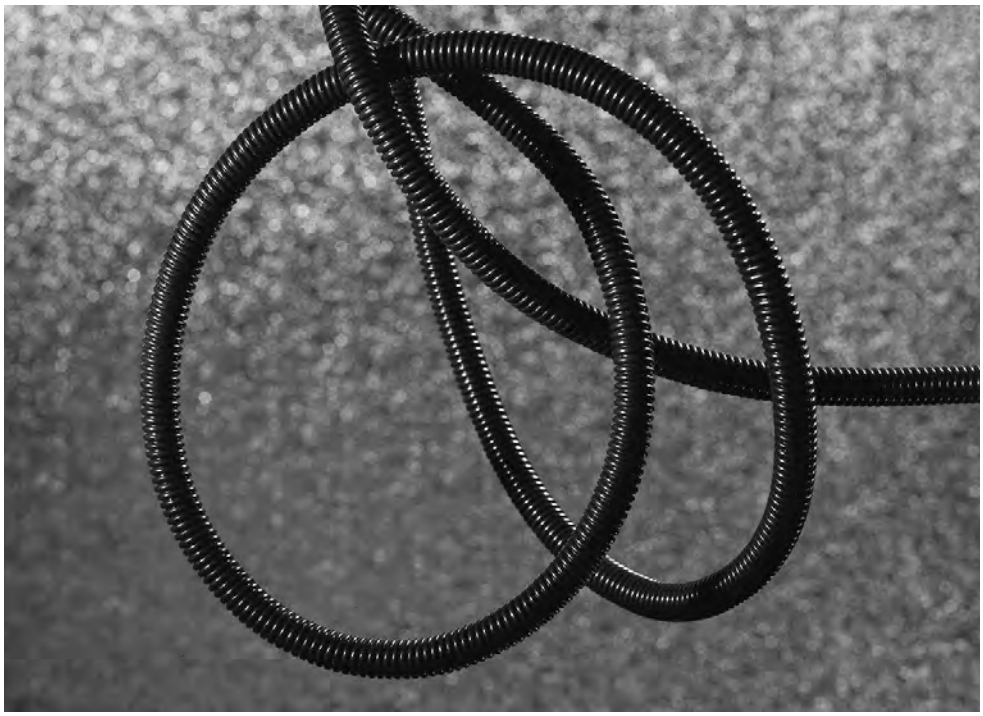



### Applications

Used as a conduit to provide mechanical protection for electrical wiring systems in applications requiring flexibility, high-temperature performance and good resistance to a variety of fluids. Widely used in the military and commercial aerospace industries.
Can be used in conjunction with other Raychem brand components to form an integrated harnessing system.

### Installation

It is recommended that no more than 70% of the internal area (“fill factor”) of the HCTE conduit be occupied by wires in any application.

### Operating Temperature Range

-55°C to 200°C
[-67°F to 392°F]

### Specifications/Approvals

| Series | Military | TE |
|---|---|---|
| HCTE | VG 96936 Part 6 | RT-1162 |

| Available in: | Americas | Europe | Asia Pacific |
|---|---|---|---|
| | ■ | ■ | ■ |



Catalog 1654025
Revised 3-13

www.te.com

Dimensions are shown for reference purposes only. Specifications subject to change.

Dimensions are in millimeters unless otherwise specified.

USA: +1 800 522 6752
Asia Pacific: +86 0 400 820 6015
UK: +44 800 267 666

For additional support numbers please visit www.te.com

## HCTE (Continued)

### Product Dimensions

| Size | Inside Diameter Minimum | Outside Diameter Maximum | Maximum Wall Thickness |
|---|---|---|---|
| 0187 | 4.60 [0.181] | 8.10 [0.320] | 0.46 [0.018] |
| 0281 | 6.90 [0.273] | 10.50 [0.414] | 0.46 [0.018] |
| 0312 | 7.70 [0.306] | 11.80 [0.450] | 0.46 [0.018] |
| 0375 | 9.20 [0.364] | 12.90 [0.510] | 0.46 [0.018] |
| 0437 | 10.80 [0.427] | 14.50 [0.571] | 0.46 [0.018] |
| 0500 | 12.30 [0.485] | 16.50 [0.650] | 0.58 [0.023] |
| 0625 | 15.40 [0.608] | 19.50 [0.770] | 0.58 [0.023] |
| 0750 | 17.90 [0.730] | 23.60 [0.930] | 0.58 [0.023] |
| 0875 | 21.80 [0.860] | 27.20 [1.073] | 0.58 [0.023] |
| 1000 | 24.70 [0.975] | 31.10 [1.226] | 0.58 [0.023] |
| 1250 | 30.70 [1.210] | 35.30 [1.539] | 0.58 [0.023] |
| 1500 | 36.50 [1.437] | 46.50 [1.832] | 0.58 [0.023] |
| 1625 | 39.60 [1.562] | 50.17 [1.975] | 0.58 [0.023] |
| 1750 | 42.67 [1.688] | 52.88 [2.082] | 0.58 [0.023] |
| 2000 | 49.20 [1.937] | 59.23 [2.332] | 0.58 [0.023] |

### Ordering Information

| | | |
|---|---|---|
| Color | Standard | Black (-0) |
| Size selection | Always order a conduit size that will ensure that a “fill factor” of 70% is not exceeded. | |
| Standard packaging | On spools. | |
| Ordering description | Specify product name, size and color (for example, HCTE-0187-0). | |



Dimensions are shown for reference purposes only. Specifications subject to change.

Dimensions are in millimeters unless otherwise specified.

USA: +1 800 522 6752
Asia Pacific: +86 0 400 820 6015
UK: +44 800 267 666

For additional support numbers please visit www.te.com

## HF

### High-Flex, Heavy-Wall, Heat-Shrinkable Tubing

### Product Facts

- Offers high flexibility
- Provides excellent insulation and abrasion protection, per U.S. Mine Safety and Health Administration (MSHA) regulations
- Flame-retardant
- HF has the following agency approvals:
  - ABS (American Bureau of Shipping)
  - Lloyd's (Lloyd's Register of Shipping)
- RoHS compliant

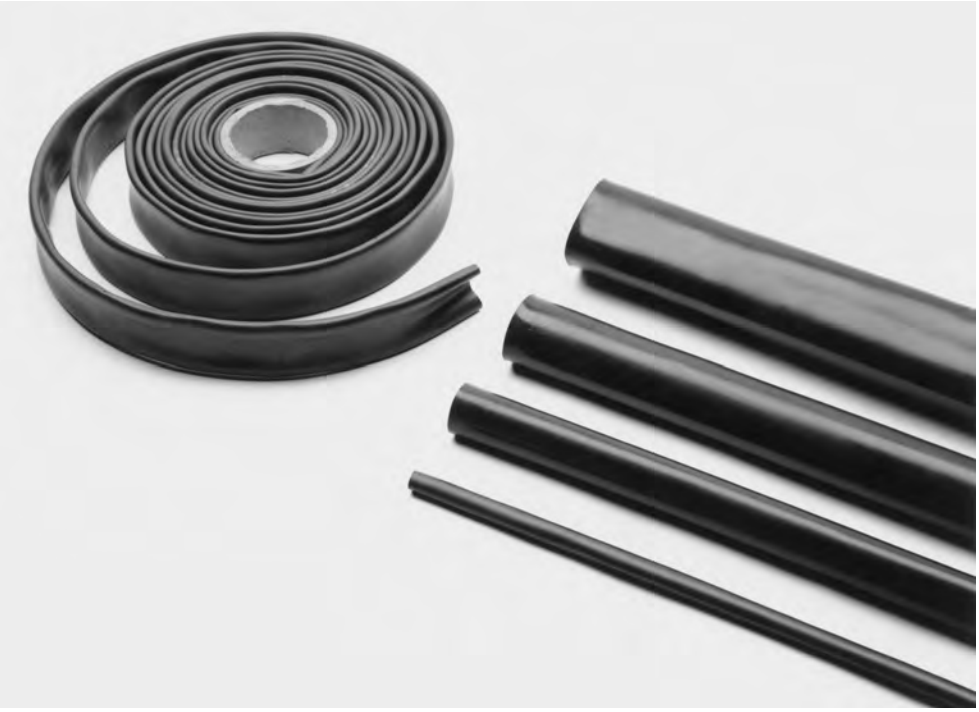

### Applications

Developed for cable jacketing applications where cable flexibility is important, high-flex (HF) tubing is good for jacketing cables where sharp bends or turns are required. Also suitable for situations where the cable is subject to motion. Such situations are common for industrial machinery, transportation equipment, robotics, welding, and many other cabling applications. To complete the cable jacket seal, the ends may be sealed for further water and corrosion protection by using available tape sealant or adhesive.

### Installation

Minimum shrink temperature: 80°C [176°F]

Minimum full recovery temperature: 121°C [250°F]

### Operating Temperature Range

-55°C to 90°C
[-67°F to 194°F]

### Specifications/Approvals

| Series | Military | Agency | TE |
|---|---|---|---|
| HF | AMS-DTL-23053/15* Class 2** | ABS, Lloyd's | RW-2023 |

*Formerly MIL-I-23053/15 and MIL-DTL-23053/15.
**Except for coatings requirement.

| Available in: | Americas | Europe | Asia Pacific |
|---|---|---|---|
| | ■ | ■ | ■ |





Catalog 1654025
Revised 3-13

www.te.com

Dimensions are shown for reference purposes only. Specifications subject to change.

Dimensions are in millimeters unless otherwise specified.

USA: +1 800 522 6752
Asia Pacific: +86 0 400 820 6015
UK: +44 800 267 666

For additional support numbers please visit www.te.com

## HF (Continued)

### Product Dimensions

| Size | Standard Nominal Length (m/ft) | Inside Diameter | | Wall Thickness** |
|---|---|---|---|---|
| | | Minimum Expanded as Supplied | Maximum Recovered After Heating | Nominal Recovered After Heating |
| HF04 | 1.2, 7.5 [4, 25] | 10.16 [0.400] | 3.81 [0.150] | 1.52 [0.060] |
| HF07 | 1.2, 7.5 [4, 25] | 19.05 [0.750] | 5.59 [0.220] | 1.52 [0.060] |
| HF11 | 1.2, 7.5 [4, 25] | 27.94 [1.100] | 9.52 [0.375] | 2.67 [0.105] |
| HF13 | 1.2, 7.5 [4, 25] | 33.02 [1.300] | 9.52 [0.375] | 2.67 [0.105] |
| HF15 | 1.2, 7.5 [4, 25] | 38.10 [1.500] | 12.70 [0.500] | 3.05 [0.120] |
| HF17 | 1.2, 7.5 [4, 25] | 43.14 [1.700] | 12.70 [0.500] | 3.05 [0.120] |
| HF20 | 1.2, 7.5 [4, 25] | 50.80 [2.000] | 19.05 [0.750] | 3.56 [0.140] |
| HF27 | 1.2, 7.5 [4, 25] | 68.58 [2.700] | 22.86 [0.900] | 3.94 [0.155] |

**Wall thickness will be less if tubing recovery is restricted during shrinkage.

### Ordering Information

| | | |
|---|---|---|
| Color | Standard | Black |
| Size selection | Always order the largest size that will shrink snugly over the component to be covered. | |
| Standard packaging | 1.2-meter [4-foot] or 7.5-meter [25-foot] lengths. Nonstandard lengths are available upon request. | |
| Ordering description | See below. | |

### Part Numbering System

**HF - _ FR X _ / _**

- **"NM"** - no mark
- **Length** in feet (4 and 25 feet standard)
- **"FR"** - flame-retardant
- **Size**
- **Product Name**

**Example: HF-17FRX25/NM**



Catalog 1654025
Revised 3-13

www.te.com

Dimensions are shown for reference purposes only. Specifications subject to change.

Dimensions are in millimeters unless otherwise specified.

USA: +1 800 522 6752
Asia Pacific: +86 0 400 820 6015
UK: +44 800 267 666

For additional support numbers please visit www.te.com

## HFT5000

### Heat-Shrinkable Fabric Tubing

### Product Facts

- **Highly flexible woven fabric tubing**
- **Polyethylene/polyester construction for excellent abrasion resistance**
- **Halogen free**
- **Heat-shrinkable to grip substrates tightly without additonal fixing**
- **2:1 shrink ratio for easy installation onto different substrate diameters and sizes**
- **Highly flexible woven fabric construction for easy, compliant installation onto awkward substrates such as bent hoses**
- **Outstanding abrasion resistance over a wide temperature range**
- **Easily cut with standard industrial cutting equipment**
- **Resistant to harsh environments**
- **Multifilament construction that ensures soft, safe handling**
- **Low shrink temperature for safe installation onto heat sensitive substrates**
- **RoHS compliant**

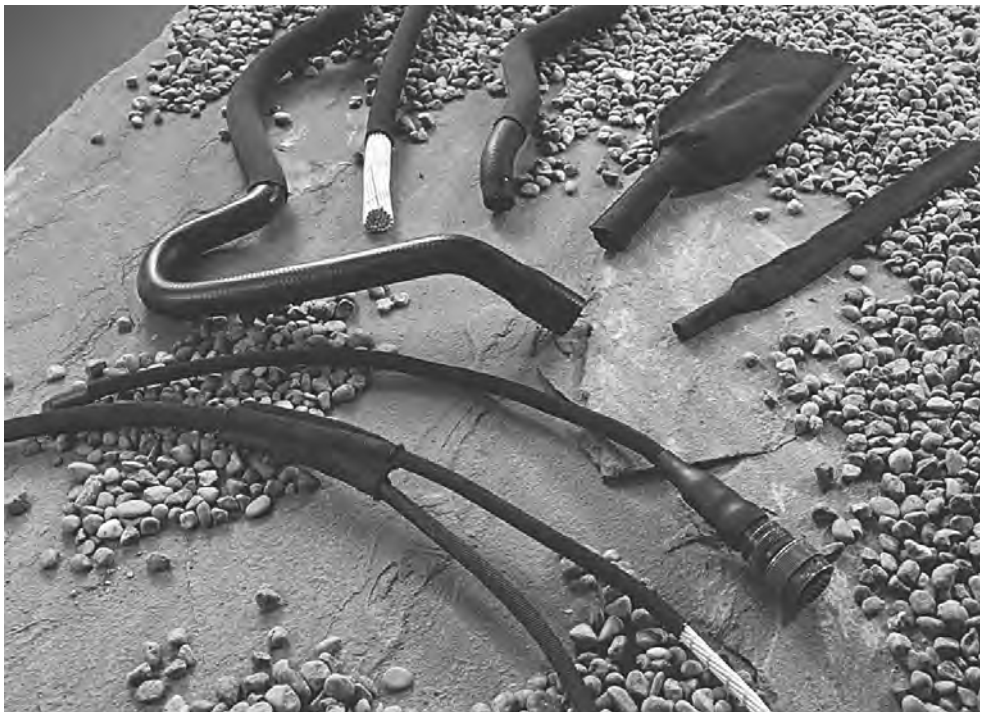

### Applications

Designed primarily to provide mechanical abrasion protection for components such as rubber hoses, plastic pipes, and harness wiring bundles. Also suitable for other applications, such as noise and rattle suppression.

The woven construction makes HFT5000 extremely flexible and resistant to trapping water, heat and humidity. Provides outstanding abrasion, chafing and cutting protection, even at high-temperatures.

### Installation

Minimum shrink temperature: 80°C [176°F]

Minimum full recovery temperature: 110°C [230°F]

Maximum storage temperature: 60°C [140°F]

### Operating Temperature Range

3000 hours:
-40°C to 125°C
[-40°F to 257°F]

1000 hours:
-40°C to 150°C
[-40°F to 302°F]

### Specifications/Approvals

| Series | UL* | TE |
|---|---|---|
| HFT5000 | E199379<br>Rated 135°C | RW-2060 |

| Available in: | Americas | Europe | Asia Pacific |
|---|---|---|---|
| | ■ | ■ | ■ |



Catalog 1654025
Revised 3-13

www.te.com

Dimensions are shown for reference purposes only. Specifications subject to change.

Dimensions are in millimeters unless otherwise specified.

USA: +1 800 522 6752
Asia Pacific: +86 0 400 820 6015
UK: +44 800 267 666

For additional support numbers please visit www.te.com

## HFT5000 (Continued)

### Product Dimensions

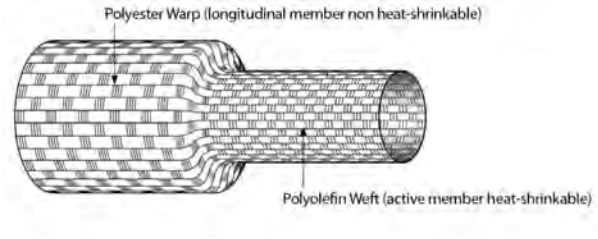


| Size | Inside Diameter | |
|---|---|---|
| | Minimum Expanded as Supplied | Maximum Recovered After Heating |
| Standard | | |
| 12/6 | 12 [0.47] | 6 [0.24] |
| 20/10 | 20 [0.79] | 10 [0.39] |
| 30/15 | 30 [1.18] | 15 [0.59] |
| 40/20 | 40 [1.57] | 20 [0.79] |
| 50/25 | 50 [1.97] | 25 [0.98] |
| 60/30 | 60 [2.36] | 30 [1.18] |
| 70/35 | 70 [2.76] | 35 [1.38] |
| Non-Standard High Volume | | |
| 25/12 | 25 [0.98] | 12 [0.47] |
| 34/17 | 34 [1.34] | 17 [0.67] |
| 80/40 | 80 [3.15] | 40 [1.57] |

### Ordering Information

| | | |
|---|---|---|
| Color | Standard | Black (-0) |
| Standard packaging | On spools. | |
| Ordering description | Specify product name, size and color (for example, HFT5000-12/6-0) | |



Catalog 1654025
Revised 3-13

www.te.com

Dimensions are shown for reference purposes only. Specifications subject to change.

Dimensions are in millimeters unless otherwise specified.

USA: +1 800 522 6752
Asia Pacific: +86 0 400 820 6015
UK: +44 800 267 666

For additional support numbers please visit www.te.com

## HRHF/HRNF/HRSR

### High-Ratio, Heat-Shrinkable Tubing

### Product Facts

- Offers toughness and durability
- Provides excellent insulation and abrasion protection
- Is available in flame-retardant material
- Shrinks to fit (5.6:1)
- FR callouts meet all of the requirements of AMS-DTL-23053/15*, except for some of the tubing sizes, which do not meet the exact recovered wall thickness requirements
- HRHF and HRSR have the following agency approvals:
  - ABS (American Bureau of Shipping)
  - Lloyd's (Lloyd's Register of Shipping
- RoHS compliant

### Applications

High-ratio (HR) heat-shrinkable tubing, with expansion ratios as high as 5.6 to 1, is designed to accommodate large size differences between cables and cable connectors and backshells, thus simplifying repair of damaged cable. High-ratio tubing is available in semirigid flame-retardant (SR), standard (NF), or high-flex flame-retardant (HF) material and with or without factory-applied sealants and adhesives. The water-proofing sealant provides environmental sealing and is watertight in wet and corrosive locations. The thermoplastic adhesive coating offers excellent strain relief and environ-mental sealing.

### Installation

Minimum shrink temperature: 80°C [176°F]

Minimum full recovery temperature: 121°C [250°F]

### Operating Temperature Range

-55°C to 110°C
[-67°F to 230°F]

### Specifications/Approvals

| Series | Agency | TE |
|---|---|---|
| HRSR | ABS, Lloyd's | RW-2013 |
| HRHF | ABS, Lloyd's | RW-2013 |
| HRNF | — | RW-2013 |

| Available in: | Americas | Europe | Asia Pacific |
|---|---|---|---|
| | ■ | ■ | ■ |





Catalog 1654025
Revised 3-13

www.te.com

Dimensions are shown for reference purposes only. Specifications subject to change.

Dimensions are in millimeters unless otherwise specified.

USA: +1 800 522 6752
Asia Pacific: +86 0 400 820 6015
UK: +44 800 267 666

For additional support numbers please visit www.te.com

## HRHF/HRNF/HRSR (Continued)

### Product Dimensions

| Size† | Inside Diameter | | Recovered Wall Thickness†† |
|---|---|---|---|
| | Minimum Expanded as Supplied | Maximum Recovered After Heating | Nominal After Heating |
| HR**060 | 15.24 [0.600] | 3.81 [0.150] | 1.52 [0.060] |
| HR**125 | 31.75 [1.250] | 6.10 [0.240] | 1.52 [0.060] |
| HR**175 | 44.45 [1.750] | 8.00 [0.315] | 2.41 [0.095] |
| HR**200 | 50.80 [2.000] | 9.52 [0.375] | 2.67 [0.105] |
| HR**250 | 63.50 [2.500] | 12.70 [0.500] | 3.05 [0.120] |
| HR**300 | 76.20 [3.000] | 19.05 [0.750] | 3.05 [0.120] |
| HR**400 | 101.60 [4.000] | 22.86 [0.900] | 3.56 [0.140] |

†For ** substitute HF, NF or SR for material required.
††Wall thickness will be less if tubing recovery is restricted during shrinkage.

### Ordering Information

| | | |
|---|---|---|
| Color | Standard | Black (-0) |
| | Nonstandard | Clear available on request (not flame-retardant; HRHF only) |
| Size selection | Always order the largest size that will shrink snugly over the component to be covered. Other sizes are available upon request. | |
| Standard packaging | Up to 18 inch lengths maximum.* | |
| Ordering description | See below. | |

*Cutting tolerance is ± 0.125".

### Part Numbering System

**HRHF - _ _ - _ / _ _**

- **"NM"** - no mark
- **Coating**
  Adhesive (/97)
  Sealant (/226)
  Blank for no coating
- **Length** in inches (up to 18 inch length maximum)
- **"FR"** - flame-retardant for SR and HF
  **"CL"** - Clear, non-flame-retardant; HF only
- **Size**
- **Product Name**
  HRHF - high flex
  HRNF - non-flame-retardant
  HRSR - semirigid

**Example: HRHF-125FR-10/226-NM**



Catalog 1654025
Revised 3-13

www.te.com

Dimensions are shown for reference purposes only. Specifications subject to change.

Dimensions are in millimeters unless otherwise specified.

USA: +1 800 522 6752
Asia Pacific: +86 0 400 820 6015
UK: +44 800 267 666

For additional support numbers please visit www.te.com

## HRHT

### High-Ratio, High-Temperature, Flexible, Thick Wall Polyolefin Heat-Shrinkable Tubing

### Product Facts

- Shrink ratios as high as 6:1
- Specially formulated for thick wall insulation, strain relief and abrasion protection
- Flame retardant passing ASTM D 635
- Excellent performance in both hot and cold environments
- Optional factory applied adhesive provides watertight environmental sealing in wet and corrosive locations
- RoHS compliant

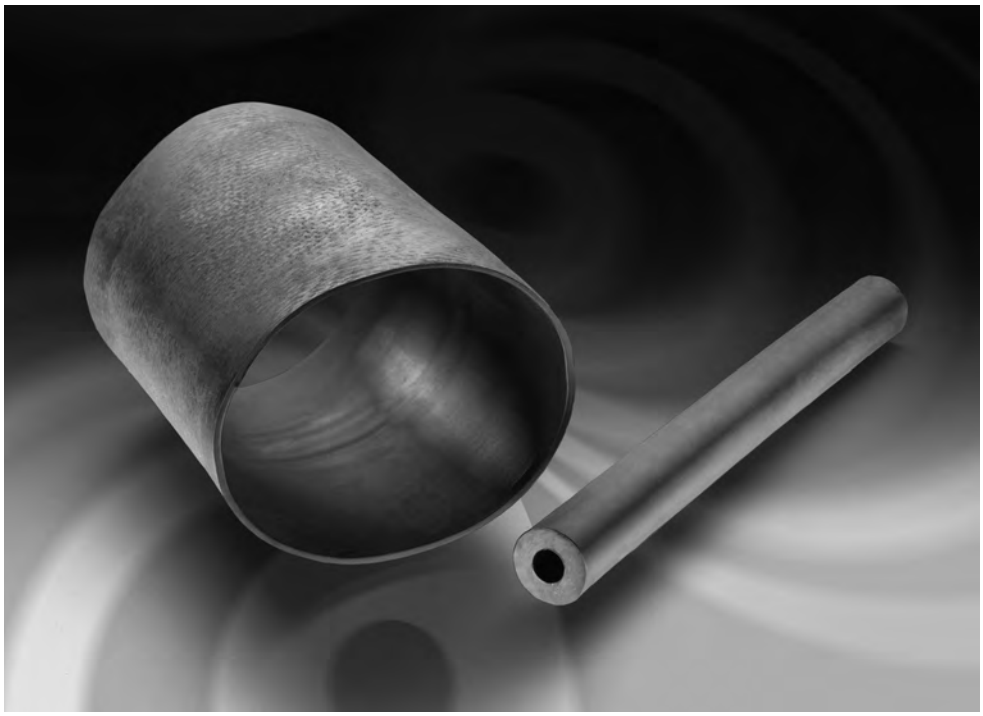

### Applications

High-ratio (HR), high–temperature (HT) heat-shrinkable tubing, with shrink ratios as high as 6-to-1, is designed to conform to odd shapes and shrink over large transitions, allowing for the repair and sealing of cable connectors and equipment. This product can be used to seal the back end of a connector or simply repair the damaged outer insulation of a cable or wire. Cable harnesses can be repaired and released without disassembly.

HRHT tubing is available with an optional hot melt adhesive lining. A high-performance adhesive is also available for more demanding applications.

### Installation

Minimum shrink temperature: 135°C [275°F]

Minimum full recovery temperature: 150°C [302°F]

### Operating Temperature Range

-55°C to 135°C
[-67°F to 275°F]

### Specifications/Approvals

| Series | Military | TE |
|---|---|---|
| HRHT | SAE-AS81765/1, Type II* | HRHT SCD |

*heat-shrinkable, crosslinked, flexible polyolefin

| Available in: | Americas | Europe | Asia Pacific |
|---|---|---|---|
| | ■ | ■ | ■ |



Catalog 1654025
Revised 3-13

www.te.com

Dimensions are shown for reference purposes only. Specifications subject to change.

Dimensions are in millimeters unless otherwise specified.

USA: +1 800 522 6752
Asia Pacific: +86 0 400 820 6015
UK: +44 800 267 666

For additional support numbers please visit www.te.com

## HRHT (Continued)

### Product Dimensions

| Size† | Inside Diameter | | Wall Thickness†† |
|---|---|---|---|
| | Minimum Expanded as Supplied | Maximum Recovered After Heating | Nominal Recovered After Heating |
| HRHT-1/X | 19.05 [0.750] | 3.05 [0.120] | 3.94 [0.155] |
| HRHT-2/X | 38.16 [1.500] | 5.84 [0.230] | 3.94 [0.155] |
| HRHT-3/X | 50.80 [2.000] | 9.14 [0.360] | 3.94 [0.155] |
| HRHT-4/X | 76.20 [3.000] | 12.70 [0.500] | 3.94 [0.155] |
| HRHT-5/X | 114.30 [4.500] | 19.05 [0.750] | 3.94 [0.155] |

†"X" indicates recovered length in inches (e.g. for 3.0-inch length: HRHT-2/3). The tolerance shall be +/- 10% of the specified recovered length.
††Wall thickness will be less if tubing recovery is restricted during shrinkage.

### Ordering Information

| | | |
|---|---|---|
| Color | Standard | Black (-0) |
| Size selection | Always order the largest size that will shrink snugly over the component to be covered. | |
| Standard packaging | In pieces. | |
| Ordering description | Specify product name, size and cut length (for example, HRHT-1/3). | |

### Part Numbering System

**HRHT - _ / _ _**

- Add **"NA"** to the end of the part number if no adhesive is required
- Unrestricted recovered length
- Expanded inside diameter - as supplied



Catalog 1654025
Revised 3-13

www.te.com

Dimensions are shown for reference purposes only. Specifications subject to change.

Dimensions are in millimeters unless otherwise specified.

USA: +1 800 522 6752
Asia Pacific: +86 0 400 820 6015
UK: +44 800 267 666

For additional support numbers please visit www.te.com

## HTAT

### Semiflexible, Dual Wall, Moisture-Resistant, Heat-Shrinkable Tubing

### Product Facts

- 4:1 shrink ratio
- Environmental sealing
- High-strength bonding
- Well-suited connector sealing covering large diameter differences
- RoHS compliant

### Applications

Designed to provide environmental sealing for a range of substrates, at elevated temperatures. Manufactured by TE from radiationcrosslinked polyolefins, the inner wall melts when heated and is forced into interstices by the shrinking of the outer wall so that, when cooled, the substrate is encapsulated by a tough, protective moisture barrier.

An operating range of -55˚C to 125˚C [-67˚F to 257˚F] and a high-shrink-ratio as standard, mean that the tubing offers superior environmental protection to a wide range of irregular shapes with varying dimensions. The jacket is flame-retardant to reduce flame propagation.

### Installation

Minimum shrink temperature: 80°C [176°F]

Minimum full recovery temperature: 110°C [230°F]

### Operating Temperature Range

-55°C to 125°C
[-67°F to 257°F]

### Specifications/Approvals

| Series | TE |
|---|---|
| HTAT | RW-2052 |

| Available in: | Americas | Europe | Asia Pacific |
|---|---|---|---|
| | ■ | ■ | ■ |





Catalog 1654025
Revised 3-13

www.te.com

Dimensions are shown for reference purposes only. Specifications subject to change.

Dimensions are in millimeters unless otherwise specified.

USA: +1 800 522 6752
Asia Pacific: +86 0 400 820 6015
UK: +44 800 267 666

For additional support numbers please visit www.te.com

## HTAT (Continued)

### Product Dimensions

| Size | Inside Diameter | | Recovered Wall Thickness* | |
|---|---|---|---|---|
| | Minimum Expanded as Supplied | Maximum Recovered After Heating | Nominal Total Wall After Heating | Nominal Adhesive Wall After Heating |
| 4/1 | 4.0 [0.158] | 1.0 [0.039] | 1.00 [0.039] | 0.40 [0.016] |
| 8/2 | 8.0 [0.315] | 2.0 [0.079] | 1.00 [0.039] | 0.50 [0.020] |
| 12/3 | 12.0 [0.472] | 3.0 [0.118] | 1.40 [0.055] | 0.60 [0.024] |
| 16/4 | 16.0 [0.630] | 4.0 [0.158] | 1.75 [0.069] | 0.75 [0.030] |
| 24/6 | 24.0 [0.945] | 6.0 [0.236] | 2.25 [0.088] | 0.80 [0.032] |
| 32/8 | 32.0 [1.260] | 8.0 [0.315] | 2.50 [0.098] | 1.00 [0.039] |
| 48/13 | 48.0 [1.890] | 13.0 [0.512] | 2.55 [0.100] | 1.00 [0.039] |

*Wall thickness will be less if tubing recovery is restricted during shrinkage.

### Ordering Information

| | |
|---|---|
| Color | Standard Black (-0) |
| Size selection | Always order the largest size that will shrink snugly over the component to be covered. Special order sizes are available upon request. |
| Standard packaging | In 1.2-meter [4-foot] lengths. |
| Ordering description | Specify product name, size and color (for example, HTAT 8/2-0). |



Dimensions are shown for reference purposes only. Specifications subject to change.

Dimensions are in millimeters unless otherwise specified.

USA: +1 800 522 6752
Asia Pacific: +86 0 400 820 6015
UK: +44 800 267 666

For additional support numbers please visit www.te.com

## Maulflex Conduit System

### Lightweight, Flexible, Abrasion-Resistant, Shielded Electrical Conduit

Mauflex conduit systems protect integrated harnessing systems while allowing re-entry and repair.

Crosslinked outer convoluted material is highly durable and abrasion-resistant

Maulflex conduit system is a three-component integrated harnessing system. Helical conduit construction of the outer layer provides crush-resistant characteristics as well as flexibility and resistance to many chemicals, fluids and solvents. The shielding layer provides EMI protection. The internal expando layer protects wires from chafing.

### Product Facts

- **Circuit design flexibility**
- **Wire-protective Expando® lining**
- **Reusability**
- **Increased service life cycle**
- **Lightweight**
- **Crush resistant**
- **Stands up to heavy abuse/abrasion**
- **Strain relief/strength member**
- **Total environmentally sealed system**
- **Line of backshells are available for reliable termination**

### Applications

To be used in ground support test equipment cables which are constantly coiled and uncoiled in and out of metal boxes/cabinets

### Electrical

RFI and EMI shielding: Either one or two layers of tinned-copper braid are available to meet shielding requirements.

Sizes of Maulflex conduit range from .240 inches with two layers of shielding to 1.430 inches with one layer of shielding.

### Materials

Harness fabrication involves using TE specified Mod M Tinel-Lock adapters, and Uniboots with light-weight Mauflex conduit.

### Part Numbers

Dimensions are inches over millimeters

| Size Number | 1 Layer Shield (A) Minimum | 1 Layer Shield Weight per 100 Feet | 2 Layer Shield (A) Minimum | 2 Layer Shield Weight per 100 Feet | (B) Maximum | Bend Radius 7* | Helical Convolex® Size |
|---|---|---|---|---|---|---|---|
| 1 | .240 (6,10) | 4.1 (1,86) | .200 (5,08) | 6.0 (2,72) | .510 (12,96) | .88 (22,35) | 3/8 |
| 2 | .312 (7,92) | 5.0 (2,27) | .270 (6,86) | 7.2 (3,27) | .571 (14,50) | .88 (22,35) | 7/16 |
| 3 | .360 (9,14) | 5.8 (2,63) | .320 (8,13) | 8.6 (3,90) | .650 (16,51) | 1.25 (31,75) | 1/2 |
| 4 | .480 (12,19) | 9.6 (4,35) | .440 (11,18) | 13.4 (6,08) | .770 (19,56) | 1.50 (38,10) | 5/8 |
| 5 | .600 (15,24) | 11.3 (5,13) | .560 (14,22) | 18.0 (8,16) | .930 (23,62) | 1.75 (44,45) | 3/4 |
| 6 | .720 (18,29) | 16.6 (7,53) | .680 (17,27) | 24.1 (10,93) | 1.073 (27,25) | 2.00 (50,80) | 7/8 |
| 7 | .840 (21,34) | 19.1 (8,66) | .800 (20,32) | 27.7 (12,56) | 1.226 (31,14) | 2.37 (60,20) | 1 |
| 8 | 1.050 (26,67) | 28.8 (13,06) | 1.000 (25,40) | 43.6 (19,78) | 1.539 (35,30) | 2.75 (69,85 | 1-1/4 |
| 9 | 1.430 (36,32) | 38.4 (17,42) | 1.375 (34,93) | 56.2 (25,49) | 1.975 (50,17) | 3.63 (92,20) | 1-5/8 |

| Available in: | Americas | Europe | Asia Pacific |
|---|---|---|---|
| | ■ | ■ | ■ |



Catalog 1654025
Revised 3-13

www.te.com

Dimensions are shown for reference purposes only. Specifications subject to change.

Dimensions are in millimeters unless otherwise specified.

USA: +1 800 522 6752
Asia Pacific: +86 0 400 820 6015
UK: +44 800 267 666

For additional support numbers please visit www.te.com

## Maulflex Conduit System (Continued)

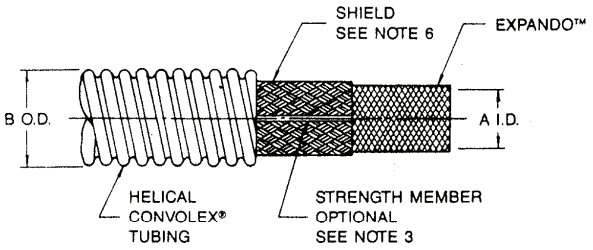


CONSTRUCTION VIEW

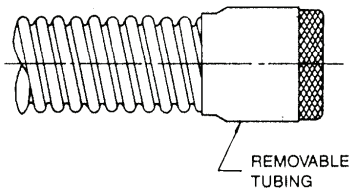


AS SUPPLIED
(ENDS ONLY)

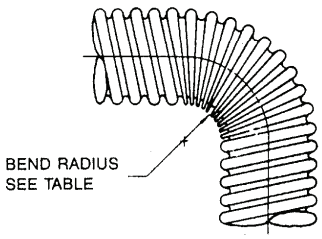


## Ordering Information

**MAULFLEX - 6 X X – SM – XX**

- Product Family Name
- Helical Convolex® type -6 XLETFE per RT-1162 (see note 8)
- Shield (see note 6)
  1. Single layer tinned copper
  2. Two layers tinned copper
- Size number (see table for dimensions)
- Add if srength member is required (see note 3)
- Length in inches

Expando is a registered trademark of Federal Mogul.

## Notes:

1. Dimensions in table are in Inches (millimeters) ; lbs. (kgms)
2. Service rating: -55°C (-67°F) to + 150°C (+302°F).
3. Two Kevlar® strength members placed longitudinally 180° apart between shield and convolex tubing. These Kelvar strength members are to be a minimum of about 12 inches longer than the convolex tubing with a minimum of 6 inches out each end and stored under the removable tubing.
4. Consult factory for optional configurations.
5. Standard lengths supplied: 4 feet minimum; 24 feet maximum (lengths to be specified when ordering).
6. Shield material, tin coated copper per A-A-59569 and QQ-B-575.

7.* The recommended minimum bend radius that can be achieved without cross sectional area reduction.

8. When used as Maulflex paragraphs 4.3.1, 4.3.2, 4.3.3, 4.3.4, 4.3.5, and Table 2 inside diameter of RT-1162 are not applicable.

Kevlar is a registered trademark of E.I. duPont de Nemours & Co.



Dimensions are shown for reference purposes only. Specifications subject to change.

Dimensions are in millimeters unless otherwise specified.

USA: +1 800 522 6752
Asia Pacific: +86 0 400 820 6015
UK: +44 800 267 666

For additional support numbers please visit www.te.com

## NT

### Flexible, General Purpose Modified Elastomeric Tubing

### Product Facts

- **Remains flexible at temperatures as low as -55˚C [-67˚F]**
- **Offers good resistance to abrasion and physical abuse while providing the flexibility and strain relief needed in general-purpose harnessing applications**
- **Resistant to most common fluids and solvents**
- **RoHS compliant**

### Applications

Widely used for insulation, strain relief, and abrasion protection on cable harnesses and wire bundles in the commercial electronics industries where a reliable general-purpose tubing is needed. Suitable for applications requiring some exposure to common fluids and solvents.

### Installation

Minimum shrink temperature: 90°C [194°F]

Minimum full recovery temperature: 135°C [275°F]

### Operating Temperature Range

-55°C to 90°C
[-67°F to 194°F]

### Specifications/Approvals

| Series | TE |
|---|---|
| NT | RT-510 |

| Available in: | Americas | Europe | Asia Pacific |
|---|---|---|---|
| | ■ | ■ | ■ |



Catalog 1654025
Revised 3-13

www.te.com

Dimensions are shown for reference purposes only. Specifications subject to change.

Dimensions are in millimeters unless otherwise specified.

USA: +1 800 522 6752
Asia Pacific: +86 0 400 820 6015
UK: +44 800 267 666

For additional support numbers please visit www.te.com

**NT** (Continued)

## Product Dimensions

| Size | Inside Diameter | | Recovered Wall Thickness** |
|---|---|---|---|
| | Minimum Expanded as Supplied | Maximum Recovered After Heating | After Heating |
| 1/8 | 3.2 [0.125] | 1.6 [0.061] | 0.69 ± 0.20 [0.027 ± 0.008] |
| 3/16 | 4.8 [0.187] | 2.5 [0.100] | 0.84 ± 0.25 [0.033 ± 0.010] |
| 1/4 | 6.4 [0.250] | 3.6 [0.143] | 0.89 ± 0.25 [0.035 ± 0.010] |
| 3/8 | 9.5 [0.375] | 5.5 [0.214] | 1.01 ± 0.25 [0.040 ± 0.010] |
| 1/2 | 12.7 [0.500] | 7.3 [0.286] | 1.21 ± 0.38 [0.048 ± 0.015] |
| 5/8 | 15.9 [0.625] | 9.1 [0.357] | 1.32 ± 0.38 [0.052 ± 0.015] |
| 3/4 | 19.1 [0.750] | 10.9 [0.428] | 1.44 ± 0.38 [0.057 ± 0.015] |
| 7/8 | 22.2 [0.875] | 12.7 [0.500] | 1.65 ± 0.38 [0.065 ± 0.015] |
| 1 | 25.4 [1.000] | 14.5 [0.570] | 1.77 ± 0.51 [0.070 ± 0.020] |
| 1 1/4 | 31.8 [1.250] | 18.1 [0.714] | 2.20 ± 0.51 [0.087 ± 0.020] |
| 1 1/2 | 38.1 [1.500] | 21.8 [0.857] | 2.41 ± 0.51 [0.095 ± 0.020] |
| 1 3/4 | 44.5 [1.750] | 25.4 [1.000] | 2.71 ± 0.51 [0.107 ± 0.020] |
| 2 | 50.8 [2.000] | 29.0 [1.140] | 2.79 ± 0.51 [0.110 ± 0.020] |
| 3 | 76.2 [3.000] | 43.4 [1.710] | 3.17 ± 0.51 [0.125 ± 0.020] |
| 4 | 101.6 [4.000] | 57.9 [2.280] | 3.55 ± 0.51 [0.140 ± 0.020] |

**Wall thickness will be less if tubing recovery is restricted during shrinkage.

## Ordering Information

| | |
|---|---|
| Color | Standard Black (-0) |
| Size selection | Always order the largest size that will shrink snugly over the component to be covered. Special order sizes are available upon request. |
| Standard packaging | On spools. |
| Ordering description | Specify product name, size and color (for example, NT 1/4-0). |



Dimensions are shown for reference purposes only. Specifications subject to change.

Dimensions are in millimeters unless otherwise specified.

USA: +1 800 522 6752
Asia Pacific: +86 0 400 820 6015
UK: +44 800 267 666

For additional support numbers please visit www.te.com

## NT-MIL

### Flexible, Rugged, Modified Elastomeric Tubing

### Product Facts

- **Remains flexible at temperatures as low as -70°C [-94°F] without cracking**
- **Withstands heat shock at 200°C [392°F] without dripping, flowing or cracking**
- **Offers outstanding resistance to abrasion and physical abuse while providing flexibility and strain relief needed in rugged harnessing applications**
- **Resistant to most fluids and solvents, including aviation and ground vehicle fuels, lubricating oil, and hydraulic fluids**
- **Meets the stringent requirements of SAE-AMS-DTL-23053/1, Classes 1 and 2**
- **RoHS compliant**

### Applications

Widely used for insulation, strain relief and abrasion protection on cable harnesses and wire bundles in the military and aerospace industries where a reliable rugged tubing is needed. Especially suitable for applications requiring exposure to common fluids and solvents.

### Installation

Minimum shrink temperature: 90°C [194°F]

Minimum full recovery temperature: 135°C [275°F]

### Operating Temperature Range

-70°C to 121°C
[-94°F to 250°F]

### Specifications/Approvals

| Series | Military | TE |
|---|---|---|
| NT-MIL | AMS-DTL-23053/1*, Classes 1 & 2 | RW-3030 |

*Formerly MIL-I-23053/1 and MIL-DTL-23053/1

| Available in: | Americas | Europe | Asia Pacific |
|---|---|---|---|
| | ■ | ■ | ■ |





Catalog 1654025
Revised 3-13

www.te.com

Dimensions are shown for reference purposes only. Specifications subject to change.

Dimensions are in millimeters unless otherwise specified.

USA: +1 800 522 6752
Asia Pacific: +86 0 400 820 6015
UK: +44 800 267 666

For additional support numbers please visit www.te.com

## NT-MIL (Continued)

### Product Dimensions

| MIL SPEC No. (CL1/CL2) | Size | Inside Diameter: Minimum Expanded as Supplied | Inside Diameter: Maximum Recovered After Heating | Recovered Wall Thickness*: After Heating |
|---|---|---|---|---|
| — | 1/8 | 3.2 [0.125] | 1.6 [0.061] | 0.69 ± 0.20 [0.027 ± 0.008] |
| — | 3/16 | 4.8 [0.187] | 2.5 [0.100] | 0.84 ± 0.25 [0.033 ± 0.010] |
| -101/-201 | 1/4 | 6.4 [0.250] | 3.6 [0.143] | 0.89 ± 0.25 [0.035 ± 0.010] |
| -102/-202 | 3/8 | 9.5 [0.375] | 5.4 [0.211] | 1.01 ± 0.25 [0.040 ± 0.010] |
| -103/-203 | 1/2 | 12.7 [0.500] | 7.3 [0.286] | 1.21 ± 0.38 [0.048 ± 0.015] |
| -104/-204 | 5/8 | 15.9 [0.625] | 9.1 [0.357] | 1.32 ± 0.38 [0.052 ± 0.015] |
| -105/-205 | 3/4 | 19.1 [0.750] | 10.9 [0.428] | 1.44 ± 0.38 [0.057 ± 0.015] |
| -106/-206 | 7/8 | 22.2 [0.875] | 12.7 [0.500] | 1.65 ± 0.38 [0.065 ± 0.015] |
| -107/-207 | 1 | 25.4 [1.000] | 14.5 [0.570] | 1.77 ± 0.51 [0.070 ± 0.020] |
| -108/-208 | 1 1/4 | 31.8 [1.250] | 18.1 [0.714] | 2.20 ± 0.51 [0.087 ± 0.020] |
| -109/-209 | 1 1/2 | 38.1 [1.500] | 21.8 [0.857] | 2.41 ± 0.51 [0.095 ± 0.020] |
| -110/-210 | 1 3/4 | 44.5 [1.750] | 25.4 [1.000] | 2.71 ± 0.51 [0.107 ± 0.020] |
| -111/-211 | 2 | 50.8 [2.000] | 29.0 [1.140] | 2.79 ± 0.51 [0.110 ± 0.020] |
| -112/-212 | 3 | 76.2 [3.000] | 43.4 [1.710] | 3.17 ± 0.51 [0.125 ± 0.020] |
| -113/-213 | 4 | 101.6 [4.000] | 57.9 [2.280] | 3.55 ± 0.51 [0.140 ± 0.020] |

*Wall thickness will be less if tubing recovery is restricted during shrinkage.

### Ordering Information

| | | |
|---|---|---|
| Color | Standard | Black (-0) |
| Size selection | Always order the largest size that will shrink snugly over the component to be covered. Special order sizes are available upon request. | |
| Standard packaging | On spools. | |
| Ordering description | Specify product name, size and color (for example, NT-MIL 1/4-0). | |



Dimensions are shown for reference purposes only. Specifications subject to change.

Dimensions are in millimeters unless otherwise specified.

USA: +1 800 522 6752
Asia Pacific: +86 0 400 820 6015
UK: +44 800 267 666

For additional support numbers please visit www.te.com

## NTFR

### Very Flexible, Rugged Neoprene Elastomer Tubing

### Product Facts

- **Remains flexible at low temperatures without cracking**
- **Offers outstanding resistance to abrasion and physical abuse while providing the flexibility and strain relief needed for rugged applications**
- **Resistant to most fluids and solvents, including aviation and ground-vehicle fuels, lubricating oil, and hydraulic fluids (see TE Specification RT-511)**
- **Performance exceeds the stringent requirements of SAE-AMS-DTL-23053/1, Class 2**
- **System 20**
- **RoHS compliant**

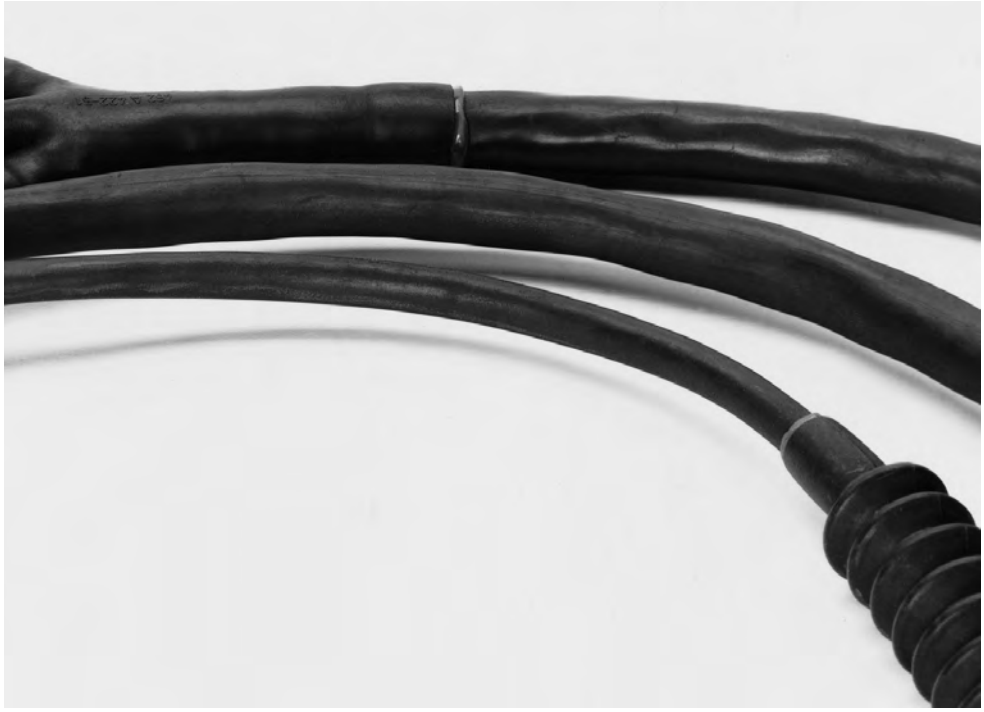

### Applications

Widely used for insulation, strain relief, and abrasion protection on cable harnesses and wire bundles in the military and aerospace industries. Especially suitable for applications requiring exposure to fluids and solvents at elevated temperatures.

### Installation

Minimum shrink temperature: 90°C [194°F]

Minimum full recovery temperature: 135°C [275°F]

### Operating Temperature Range

-70°C to 121°C
[-94°F to 250°F]

### Specifications/Approvals

| Series | Specification | Agency | TE |
|---|---|---|---|
| NTFR | SC-X-15112 | AMS 3623 | RT-511 |

| Available in: | Americas | Europe | Asia Pacific |
|---|---|---|---|
| | ■ | ■ | ■ |





Catalog 1654025
Revised 3-13

www.te.com

Dimensions are shown for reference purposes only. Specifications subject to change.

Dimensions are in millimeters unless otherwise specified.

USA: +1 800 522 6752
Asia Pacific: +86 0 400 820 6015
UK: +44 800 267 666

For additional support numbers please visit www.te.com

## NTFR (Continued)

### Product Dimensions

| SC-X15112 | | Inside Diameter | | Recovered Wall Thickness** |
|---|---|---|---|---|
| Spec. No. | Size | Minimum Expanded as Supplied | Maximum Recovered After Heating | After Heating |
| -001 | 1/8 | 3.2 [0.125] | 1.6 [0.061] | 0.69 ± 0.20 [0.027 ± 0.008] |
| — | 3/16 | 4.8 [0.187] | 2.5 [0.100] | 0.84 ± 0.25 [0.033 ± 0.010] |
| -002 | 1/4 | 6.4 [0.250] | 3.6 [0.143] | 0.89 ± 0.25 [0.035 ± 0.010] |
| -003 | 3/8 | 9.5 [0.375] | 5.5 [0.214] | 1.01 ± 0.25 [0.040 ± 0.010] |
| -004 | 1/2 | 12.7 [0.500] | 7.3 [0.286] | 1.21 ± 0.38 [0.048 ± 0.015] |
| -005 | 5/8 | 15.9 [0.625] | 9.1 [0.357] | 1.32 ± 0.38 [0.052 ± 0.015] |
| -006 | 3/4 | 19.1 [0.750] | 10.9 [0.428] | 1.44 ± 0.38 [0.057 ± 0.015] |
| -007 | 7/8 | 22.2 [0.875] | 12.7 [0.500] | 1.65 ± 0.38 [0.065 ± 0.015] |
| -008 | 1 | 25.4 [1.000] | 14.5 [0.570] | 1.77 ± 0.51 [0.070 ± 0.020] |
| -009 | 1 1/4 | 31.8 [1.250] | 18.1 [0.714] | 2.20 ± 0.51 [0.087 ± 0.020] |
| -010 | 1 1/2 | 38.1 [1.500] | 21.8 [0.857] | 2.41 ± 0.51 [0.095 ± 0.020] |
| -011 | 1 3/4 | 44.5 [1.750] | 25.4 [1.000] | 2.71 ± 0.51 [0.107 ± 0.020] |
| -012 | 2 | 50.8 [2.000] | 29.0 [1.140] | 2.79 ± 0.51 [0.110 ± 0.020] |
| -013 | 3 | 76.2 [3.000] | 43.4 [1.710] | 3.17 ± 0.51 [0.125 ± 0.020] |
| -014 | 4 | 101.6 [4.000] | 57.9 [2.280] | 3.55 ± 0.50 [0.140 ± 0.020] |

**Wall thickness will be less if tubing recovery is restricted during shrinkage.

### Ordering Information

| | | |
|---|---|---|
| Color | Standard | Black (-0) |
| Size selection | Always order the largest size that will shrink snugly over the component to be covered. Special order sizes are available upon request. | |
| Standard packaging | On spools. | |
| Ordering description | Specify product name, size and color (for example, NTFR 1/4-0). | |



Dimensions are shown for reference purposes only. Specifications subject to change.

Dimensions are in millimeters unless otherwise specified.

USA: +1 800 522 6752
Asia Pacific: +86 0 400 820 6015
UK: +44 800 267 666

For additional support numbers please visit www.te.com

## PD Caps

### Semirigid, Encapsulant-Lined, Polyolefin Caps

### Product Facts

- 3:1 shrink ratio
- Permanent or temporary way to terminate wires
- Rapid, simple installation
- Rugged protection against abrasion, vibration, and flexing
- PD caps provide a splash-resistant, moisture-resistant covering (but not intended for use where immersion in fluids is required)
- RoHS compliant

### Applications

PD Caps offer an improved, inexpensive way to encapsulate crimped electrical connections, including those on motor coils. Their encapsulant lining melts and flows to fill surface irregularities of the substrate. These vibration-proof caps are used to insulate and terminate dead-end electrical cables, fixtures, connectors, and other electrical components.

### Installation

Minimum shrink temperature: 125°C [257°F]

Minimum full recovery temperature: 135°C [275°F]

### Operating Temperature Range

-55°C to 110°C
[-67°F to 230°F]

### Specifications/Approvals

| Series | UL | TE |
|---|---|---|
| PD Caps | E85381<br>600 V, 125°C | PD Caps SCD |

| Available in: | Americas | Europe | Asia Pacific |
|---|---|---|---|
| | ■ | ■ | ■ |



Catalog 1654025
Revised 3-13

www.te.com

Dimensions are shown for reference purposes only. Specifications subject to change.

Dimensions are in millimeters unless otherwise specified.

USA: +1 800 522 6752
Asia Pacific: +86 0 400 820 6015
UK: +44 800 267 666

For additional support numbers please visit www.te.com

## PD Caps (Continued)

### Product Dimensions

| Size | Length | | Inside Diameter | | Recovered Wall Thickness** Total Wall After Heating |
|---|---|---|---|---|---|
| | Nominal Overall as Supplied | Minimum Open Barrel as Supplied* | Minimum Expanded as Supplied | Maximum Recovered After Heating | |
| 1/8 | 25.4 [1.00] | 12.7 [0.50] | 3.18 [0.125] | 0.58 [0.023] | 1.22 ± 0.15 [0.048 ± 0.006] |
| 3/16 | 25.4 [1.00] | 15.2 [0.60] | 4.75 [0.187] | 1.52 [0.060] | 1.57 ± 0.20 [0.062 ± 0.008] |
| 1/4 | 28.4 [1.12] | 15.2 [0.60] | 6.35 [0.250] | 2.03 [0.080] | 1.98 ± 0.25 [0.078 ± 0.010] |
| 3/8 | 31.8 [1.25] | 18.3 [0.72] | 9.53 [0.375] | 2.29 [0.090] | 2.08 ± 0.25 [0.082 ± 0.010] |
| 1/2 | 38.1 [1.50] | 21.6 [0.85] | 12.70 [0.500] | 2.29 [0.090] | 2.54 ± 0.25 [0.100 ± 0.010] |

*See glossary for definition of “barrel.”
**Wall thickness will be less if recovery is restricted during shrinkage.

### Ordering Information

| | |
|---|---|
| Color | Standard Black (-0) |
| Size selection | Always order the largest size that will shrink snugly over the component to be covered. Special order sizes are available upon request. |
| Standard packaging | In pieces. |
| Ordering description | Specify product name, size and color (for example, PD Caps 1/4-0). |



Dimensions are shown for reference purposes only. Specifications subject to change.

Dimensions are in millimeters unless otherwise specified.

USA: +1 800 522 6752
Asia Pacific: +86 0 400 820 6015
UK: +44 800 267 666

For additional support numbers please visit www.te.com

## PTCM

### Very High-Shrink-Ratio, Dual Wall, Flexible Heat-Shrinkable Tubing

### Product Facts

- 6:1 shrink ratio
- Exceptional abrasion and cut through resistance
- Low shrink temperature for rapid installation
- Excellent mechanical strength
- RoHS compliant

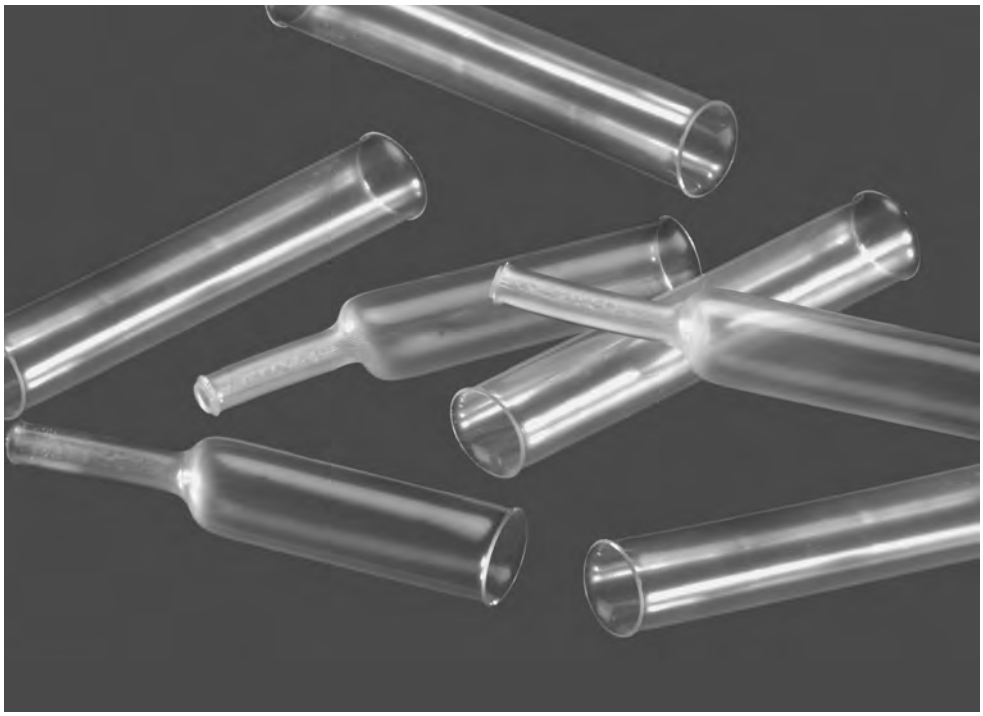



### Applications

PTCM is a flexible, heat-shrinkable, dual wall tubing with an integrally bonded meltable adhesive liner. PTCM offers outstanding mechanical and environmental protection to wire splices and terminals and is used for moisture proof encapsulation of a wide variety of components. In particular, it adheres well to PVC. With an impressive 6:1 expansion ratio, one product can protect and insulate a wide range of applications. PTCM also offers exceptional clarity for protection of substrates that may need to be inspected during service.

### Installation

Minimum shrink temperature: 60°C [140°F]

Minimum full recovery temperature: 80°C [176°F]

### Operating Temperature Range

-40°C to 85°C
[-40°F to 185°F]

### Specifications/Approvals

| Series | TE |
|---|---|
| PTCM | RK-6768 |

| Available in: | Americas | Europe | Asia Pacific |
|---|---|---|---|
| | | ■ | |



Catalog 1654025
Revised 3-13

www.te.com

Dimensions are shown for reference purposes only. Specifications subject to change.

Dimensions are in millimeters unless otherwise specified.

USA: +1 800 522 6752
Asia Pacific: +86 0 400 820 6015
UK: +44 800 267 666

For additional support numbers please visit www.te.com

## PTCM (Continued)

### Product Dimensions

| Size | Inside Diameter | | Recovered Wall Thickness* |
|---|---|---|---|
| | Minimum Expanded as Supplied | Maximum Recovered After Heating | After Heating |
| 9/1.5 | 9.0 [0.354] | 1.5 [0.059] | 1.60 ± 0.20 [0.062 ± 0.008] |

*Wall thickness will be less if tubing recovery is restricted during shrinkage.

### Ordering Information

| | |
|---|---|
| Color | Standard Clear (-X) |
| Size selection | Always order the largest size that will shrink snugly over the component to be covered. |
| Standard packaging | On spools. |
| Ordering description | PTCM-9/1.5-X-SP |



Catalog 1654025
Revised 3-13

www.te.com

Dimensions are shown for reference purposes only. Specifications subject to change.

Dimensions are in millimeters unless otherwise specified.

USA: +1 800 522 6752
Asia Pacific: +86 0 400 820 6015
UK: +44 800 267 666

For additional support numbers please visit www.te.com

## RayBlock 85

### Heat-Shrinkable Water-Blocking System

### Product Facts

- **Environmentally seals wire bundles of up to 20 wires**
- **Withstands temperature excursions to 105°C [221°F]**
- **Provides excellent strain relief and reduces noise**
- **Offers a low-profile installed product only marginally larger than the cable bundle itself**
- **RoHS compliant**

### Applications

Designed to provide consistent sealing for cable bundles and the back of connectors. The wires are placed within the channels of a specially formulated hot-melt adhesive profile, then covered by dual-wall, heat-shrinkable tubing with a flame-retardant, radiation-crosslinked outer wall and hot-melt-adhesive inner wall. When the tubing is heated, the hot-melt adhesive melts and the tubing shrinks, forcing the molten adhesive to fill all the voids within the wire bundle and tubing. The result is a solid plug of adhesive molded around each wire in the bundle, creating a moisture-resistant seal.

### Installation

Minimum shrink temperature: 80°C [176°F]

Minimum full recovery temperature: 110°C [230°F]

### Operating Temperature Range

-40°C to 85°C
[-40°F to 185°F]

### Specifications/Approvals

| Series | TE |
|---|---|
| RayBlock 85 | RayBlock 85 SCD<br>RW-2101 |

| Available in: | Americas | Europe | Asia Pacific |
|---|---|---|---|
| | ■ | ■ | ■ |





Catalog 1654025
Revised 3-13

www.te.com

Dimensions are shown for reference purposes only. Specifications subject to change.

Dimensions are in millimeters unless otherwise specified.

USA: +1 800 522 6752
Asia Pacific: +86 0 400 820 6015
UK: +44 800 267 666

For additional support numbers please visit www.te.com

## RayBlock 85 (Continued)

### Product Dimensions

| Part No. | No. of Channels | Profile | | | Tubing Inside Diameter | | |
|---|---|---|---|---|---|---|---|
| | | Outside Height | Length | Width | Minimum Expanded as Supplied | Maximum Recovered After Heating | Nominal Length |
| RayBlock 85 Kit 0102-A0 | 2 | 8.5 [0.335] | 2.75 [0.108] | 8.50 [0.335] | 12.0 [0.472] | 3.0 [0.118] | 40 [1.57] |
| RayBlock 85 Kit 0203-A0 | 3 | 8.5 [0.335] | 2.75 [0.108] | 12.25 [0.482] | 24.0 [0.945] | 6.0 [0.236] | 47 [1.85] |
| RayBlock 85 Kit 0504-A0 | 4 | 8.5 [0.335] | 2.75 [0.108] | 16.00 [0.630] | 16.0 [0.630] | 4.0 [0.158] | 40 [1.57] |
| RayBlock 85 Kit 0405-A0 | 5 | 8.5 [0.335] | 2.75 [0.108] | 19.75 [0.778] | 24.0 [0.945] | 6.0 [0.236] | 45 [1.77] |
| RayBlock 85 Kit 0107-A0 | 7 | 8.5 [0.335] | 2.75 [0.108] | 27.25 [1.070] | 24.0 [0.945] | 6.0 [0.236] | 65 [2.56] |
| RayBlock 85 Kit 0510-A0 | 10 | 8.5 [0.335] | 2.75 [0.108] | 38.50 [1.520] | 32.0 [1.260] | 8.0 [0.315] | 55 [2.17] |

### Ordering Information

| | |
|---|---|
| Color | Standard Black (-0) |
| Size selection | For wire with an outside diameter smaller than 2.8 [0.110] , use a maximum of two wires per channel.<br>For wire with an outside diameter of 2.8–3.5 [0.110 to 0.138], use a maximum of one wire per channel.<br>Special order sizes are available upon request. |
| Standard packaging | One kit (contains 1000 pcs. of profile and 1000 pcs. of tubing). |



Dimensions are shown for reference purposes only. Specifications subject to change.

Dimensions are in millimeters unless otherwise specified.

USA: +1 800 522 6752
Asia Pacific: +86 0 400 820 6015
UK: +44 800 267 666

For additional support numbers please visit www.te.com

## RayBlock 105

### Heat-Shrinkable Water-Blocking System

### Product Facts

- **Environmentally seals wire bundles of up to 20 wires**
- **Withstands temperature excursions to 120°C [248°F]**
- **Provides excellent strain relief and reduces noise**
- **Offers a low-profile installed product only marginally larger than the cable bundle itself**
- **RoHS compliant**

### Applications

Designed to provide consistent sealing for cable bundles and the back of connectors. The wires in the bundle are placed within the channels of a specially formulated hot-melt adhesive profile, and then covered by dual wall, heat-shrinkable tubing with a flame-retardant radiation-crosslinked outer wall and hot-melt-adhesive inner wall. When the tubing is heated, the hot-melt adhesive melts and the tubing shrinks, forcing the molten adhesive to fill all the voids within the wire bundle and tubing. The result is a solid plug of adhesive molded around each wire in the bundle, creating a moisture-resistant seal.

### Installation

Minimum shrink temperature: 80°C [176°F]

Minimum full recovery temperature: 110°C [230°F]

### Operating Temperature Range

-40°C to 105°C
[-40°F to 221°F]

### Specifications/Approvals

| Series | TE |
|---|---|
| RayBlock 105 | RayBlock 105 SCD<br>RW-2102 |

| Available in: | Americas | Europe | Asia Pacific |
|---|---|---|---|
| | ■ | ■ | ■ |



Catalog 1654025
Revised 3-13

www.te.com

Dimensions are shown for reference purposes only. Specifications subject to change.

Dimensions are in millimeters unless otherwise specified.

USA: +1 800 522 6752
Asia Pacific: +86 0 400 820 6015
UK: +44 800 267 666

For additional support numbers please visit www.te.com

## RayBlock 105 (Continued)

### Product Dimensions

| Part No. | No. of Channels | Profile | | | Tubing Inside Diameter | | |
|---|---|---|---|---|---|---|---|
| | | Outside Height | Length | Width | Minimum Expanded as Supplied | Maximum Recovered After Heating | Nominal Length |
| RayBlock 105 Kit 0102-A0 | 2 | 8.5 [0.335] | 2.75 [0.108] | 8.50 [0.335] | 12.0 [0.472] | 3.0 [0.118] | 40 [1.57] |
| RayBlock 105 Kit 0103-A0 | 3 | 8.5 [0.335] | 2.75 [0.108] | 12.25 [0.482] | 16.0 [0.630] | 4.0 [0.158] | 40 [1.57] |
| RayBlock 105 Kit 0504-A0 | 4 | 8.5 [0.335] | 2.75 [0.108] | 16.00 [0.630] | 16.0 [0.630] | 4.0 [0.158] | 45 [1.77] |
| RayBlock 105 Kit 0105-A0 | 5 | 8.5 [0.335] | 2.75 [0.108] | 19.75 [0.778] | 24.0 [0.945] | 6.0 [0.236] | 45 [1.77] |
| RayBlock 105 Kit 0107-A0 | 7 | 8.5 [0.335] | 2.75 [0.108] | 27.20 [1.070] | 24.0 [0.945] | 6.0 [0.236] | 65 [2.56] |
| RayBlock 105 Kit 0110-A0 | 10 | 8.5 [0.335] | 2.75 [0.108] | 38.50 [1.520] | 32.0 [1.260] | 8.0 [0.315] | 65 [2.56] |

### Ordering Information

| | |
|---|---|
| Color | Standard Black (-0) |
| Size selection | For wire with an outside diameter smaller than 2.8 [0.110], use a maximum of two wires per channel.<br>For wire with an outside diameter of 2.8–3.5 [0.110–0.138], use a maximum of one wire per channel.<br>Special order sizes are available upon request. |
| Standard packaging | One kit (contains 1000 pcs. of profile and 1000 pcs. of tubing). |



Dimensions are shown for reference purposes only. Specifications subject to change.

Dimensions are in millimeters unless otherwise specified.

USA: +1 800 522 6752
Asia Pacific: +86 0 400 820 6015
UK: +44 800 267 666

For additional support numbers please visit www.te.com

## Rayrim Edging Material

### Commercial Protective, Self-Adhering, Edging Material

### Product Facts

- Flexible to allow for protection of curved edges
- RoHS compliant

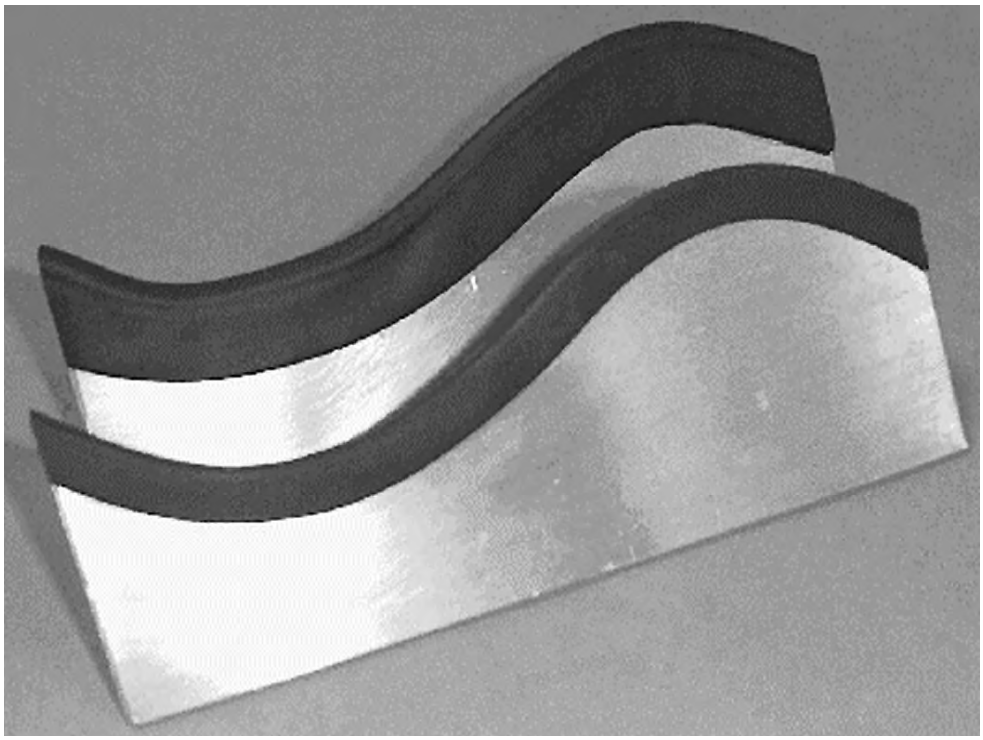

### Applications

Rayrim edging material is an extruded strip internally coated with a heat activated adhesive, so that on heating the profile changes from a "V" to a "U" section and the adhesive bonds to the substrate profile.

Manufactured from a radiation cross-linked polyolefin material, the profile offers a clean and rapid means of covering metal, wood and glass edges for all-round protection.

The flexible nature of the product allows application to both internal and external radii, as well as straight edges, and the continuous operating temperature of -55°C to +80°C [-67°F to 176°F] means that the product can give protection under the most testing circumstances.

### Installation

Minimum shrink temperature: 120°C [248°F]

Minimum full recovery temperature: 150°C [302°F]

### Operating Temperature Range

-55°C to 80°C
[-67°F to 176°F]

### Specifications/Approvals

| Series | TE |
|---|---|
| Rayrim | RK-6182 |

| Available in: | Americas | Europe | Asia Pacific |
|---|---|---|---|
| | ■ | ■ | ■ |





Catalog 1654025
Revised 3-13

www.te.com

Dimensions are shown for reference purposes only. Specifications subject to change.

Dimensions are in millimeters unless otherwise specified.

USA: +1 800 522 6752
Asia Pacific: +86 0 400 820 6015
UK: +44 800 267 666

For additional support numbers please visit www.te.com

## Rayrim Edging Material (Continued)

### Product Dimensions

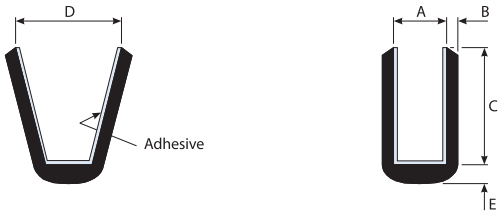


| Size | A (maximum) | B (minimum) | C (minimum) | D (minimum) | E (typical) |
|---|---|---|---|---|---|
| Nr. 6 | 0.6 [0.024] | 0.5 [0.020] | 3.5 [0.138] | 0.8 [0.032] | 1.25 [0.049] |
| Nr. 7 | 1.0 [0.039] | 0.9 [0.035] | 4.8 [0.189] | 1.6 [0.063] | 1.25 [0.049] |
| Nr. 8 | 2.0 [0.079] | 0.9 [0.035] | 6.6 [0.260] | 2.5 [0.098] | 2.25 [0.089] |
| Nr. 9 | 4.2 [0.165] | 0.9 [0.035] | 13.5 [0.532] | 4.5 [0.177] | 2.20 [0.087] |

### Application Range

| Plate SWG | Thickness | Recommended minimum bend radius |
|---|---|---|
| 30-24 | 0.31-0.56 [0.012-0.022] | 10 [0.394] |
| 23-16 | 0.61-1.63 [0.026-0.064] | 15 [0.591] |
| 15-10 | 1.83-3.25 [0.072-0.128] | 20 [0.787] |
| 9-5 | 3.66-5.38 [0.144-0.212] | 25 [0.984] |

### Ordering Information

| | | |
|---|---|---|
| Color | Standard | Black (-0) |
| Size selection | Always order the largest size that will shrink snugly on edge of the panel. | |
| Standard packaging | 1.2-meter [4-foot] lengths. | |
| Ordering description | Specify product name, size number and color (for example, Rayrim Nr.6-0). | |



Dimensions are shown for reference purposes only. Specifications subject to change.

Dimensions are in millimeters unless otherwise specified.

USA: +1 800 522 6752
Asia Pacific: +86 0 400 820 6015
UK: +44 800 267 666

For additional support numbers please visit www.te.com

## RaySpool

### Convenient packaging and dispensing system for heat-shrinkable tubing

### Product Facts

- Easy to store
- Easy to dispense
- Well-suited for repairs
- Single wall and adhesive-lined tubings
- Wide variety of colors, sizes and kits available
- Also available are RaySpool kits comprised of 6 sizes and supplied with a mounting rack
- Stand alone racks and packaging sets also available
- RoHS compliant

### Applications

The RaySpool system offers a convenient packaging and dispensing option for a range of heat-shrinkable tubings. The tubing is supplied on small reels which are overboxed and feature a dispensing window allowing the tubing to be easily and readily accessed. The RaySpool system is a suitable method of storing and for use in the workshop, service vehicle or laboratory. A varied selection of tubings is offered which will cover a diverse range of applications including electrical insulation, strain relief, cable bundling and environmental protection. RaySpool packaging is available for CGPT, LSTT and CGAT.

### Installation

See individual product pages.

### Operating Temperature Range

See individual product pages.

### Specifications/Approvals

See individual product pages.

| Available in: | Americas | Europe | Asia Pacific |
|---|---|---|---|
| | | ■ | |





Catalog 1654025
Revised 3-13

www.te.com

Dimensions are shown for reference purposes only. Specifications subject to change.

Dimensions are in millimeters unless otherwise specified.

USA: +1 800 522 6752
Asia Pacific: +86 0 400 820 6015
UK: +44 800 267 666

For additional support numbers please visit www.te.com

## RaySpool (Continued)

### CGPT 2:1 Product Dimensions

| Size | Inside Diameter | | Recovered Wall Thickness* | Spool Quantity - Black (meters) | Spool Quantity - Green/Yellow (meters) | Ordering Description |
|---|---|---|---|---|---|---|
| | Minimum Expanded as Supplied | Maximum Recovered After Heating | After Heating | | | |
| 1.6/0.8 | 1.6 (0.062) | 0.8 (0.031) | 0.45 ± 0.12 | 10.0 | - | CGPT-R-1.6-col code |
| 2.4/1.2† | 2.4 (0.093) | 1.2 (0.046) | 0.50 ± 0.12 | 10.0 | - | CGPT-R-2.4-col code |
| 3.2/1.6†• | 3.2 (0.125) | 1.6 (0.062) | 0.50 ± 0.12 | 10.0 | 5.0 | CGPT-R-3.2-col code |
| 4.8/2.4† | 4.8 (0.187) | 2.4 (0.093) | 0.50 ± 0.12 | 9.0 | - | CGPT-R-4.8-col code |
| 6.4/3.2†• | 6.4 (0.250) | 3.2 (0.125) | 0.65 ± 0.15 | 8.0 | 3.5 | CGPT-R-6.4-col code |
| 9.5/4.8• | 9.5 (0.375) | 4.8 (0.187) | 0.65 ± 0.15 | 6.0 | 3.0 | CGPT-R-9.5-col code |
| 12.7/6.4†• | 12.7 (0.500) | 6.4 (0.250) | 0.65 ± 0.15 | 6.0 | 2.5 | CGPT-R-12.7-col code |
| 19/9.5• | 19.0 (0.748) | 9.5 (0.375) | 0.75 ± 0.15 | 5.0 | 2.0 | CGPT-R-19.0-col code |
| 25.4/12.7†• | 25.4(1.000) | 12.7 (0.500) | 0.90 ± 0.20 | 3.0 | 1.5 | CGPT-R-25.4-col code |
| KIT CONTAINS SIZES INDICATED BY † | | | | | | CGPT-R-KIT-2 |

*Wall thickness will be less if tubing recovery is restricted during shrinkage.

### Ordering Information

| | | |
|---|---|---|
| Color | Standard | Black (-0)<br>Green/yellow (-45) available in sizes indicated by • |
| Size selection | Always order the largest size that will shrink snugly over the component to be covered. | |
| Standard packaging | On mini spools. | |
| Ordering description | See above for description | |

### CGPT 3:1 Product Dimensions

| Size | Inside Diameter | | Recovered Wall Thickness* | Spool Quantity (meters) | Ordering Description |
|---|---|---|---|---|---|
| | Minimum Expanded as Supplied | Maximum Recovered After Heating | After Heating | | |
| 3/1† | 3.0 (0.118) | 1.0 (0.040) | 0.55 ± 0.12 | 10.0 | CGPT-R-3/1-col code |
| 6/2† | 6.0 (0.236) | 2.0 (0.079) | 0.65 ± 0.12 | 7.0 | CGPT-R-6/2-col code |
| 9/3† | 9.0 (0.354) | 3.0 (0.118) | 0.75 ± 0.15 | 5.0 | CGPT-R-9/3-col code |
| 12/4† | 12.0 (0.472) | 4.0 (0.157) | 0.75 ± 0.15 | 4.0 | CGPT-R-12/4-col code |
| 18/6† | 18.0 (0.709) | 6.0 (0.236) | 0.85 ± 0.15 | 3.0 | CGPT-R-18/6-col code |
| 24/8† | 24.0 (0.945) | 8.0 (0.315) | 1.00 ± 0.20 | 3.0 | CGPT-R-24/8-col code |
| KIT CONTAINS SIZES INDICATED BY † (black only) | | | | | CGPT-R-KIT-1 |

*Wall thickness will be less if tubing recovery is restricted during shrinkage.

### Ordering Information

| | | |
|---|---|---|
| Color | Standard | Black (-0) Red (-2) Yellow (-4) Blue (-6) |
| Size selection | Always order the largest size that will shrink snugly over the component to be covered. | |
| Standard packaging | On mini spools. | |
| Ordering description | See above for description | |



Dimensions are shown for reference purposes only. Specifications subject to change.

Dimensions are in millimeters unless otherwise specified.

USA: +1 800 522 6752
Asia Pacific: +86 0 400 820 6015
UK: +44 800 267 666

For additional support numbers please visit www.te.com

## RaySpool (Continued)

### LSTT 2:1 Product Dimensions

| Size | Inside Diameter | | Recovered Wall Thickness* | Spool Quantity - Black (meters) | Ordering Description |
|---|---|---|---|---|---|
| | Minimum Expanded as Supplied | Maximum Recovered After Heating | After Heating | | |
| 2.4/1.2† | 2.4 (0.093 | 1.2 (0.046) | 0.55 ± 0.12 | 10.0 | LSTT-R-2.4-0 |
| 3.2/1.6† | 3.2 (0.125) | 1.6 (0.062) | 0.55 ± 0.12 | 10.0 | LSTT-R-3.2-0 |
| 4.8/2.4† | 4.8 (0.187) | 2.4 (0.093) | 0.55 ± 0.12 | 9.0 | LSTT-R-4.8-0 |
| 6.4/3.2† | 6.4 (0.250) | 3.2 (0.125) | 0.65 ± 0.15 | 8.0 | LSTT-R-6.4-0 |
| 9.5/4.8 | 9.5 (0.375) | 4.8 (0.187) | 0.65 ± 0.15 | 6.0 | LSTT-R-9.5-0 |
| 12.7/6.4† | 12.7 (0.500) | 6.4 (0.250) | 0.65 ± 0.15 | 6.0 | LSTT-R-12.7-0 |
| 19/9.5 | 19.0 (0.748) | 9.5 (0.375) | 0.80 ± 0.15 | 5.0 | LSTT-R-19.0-0 |
| 25.4/12.7† | 25.4(1.000) | 12.7 (0.500) | 0.95 ± 0.18 | 3.0 | LSTT-R-25.4-0 |
| KIT CONTAINS SIZES INDICATED BY † (black only) | | | | | LSTT-R-KIT-1 |

*Wall thickness will be less if tubing recovery is restricted during shrinkage.

### Ordering Information

| | | |
|---|---|---|
| Color | Standard | Black (-0) |
| Size selection | Always order the largest size that will shrink snugly over the component to be covered. | |
| Standard packaging | On mini spools. | |
| Ordering description | See above for description | |

### CGAT 3:1 Product Dimensions

| Size | Inside Diameter | | Recovered Wall Thickness* | Spool Quantity (meters) | Ordering Description |
|---|---|---|---|---|---|
| | Minimum Expanded as Supplied | Maximum Recovered After Heating | After Heating | | |
| 3/1† | 3.0 (0.118) | 1.0 (0.040) | 1.00 ± 0.25 | 5.0 | CGAT-R-3/1-0 |
| 6/2† | 6.0 (0.236) | 2.0 (0.079) | 1.00 ± 0.25 | 3.5 | CGAT-R-6/2-0 |
| 9/3† | 9.0 (0.354) | 3.0 (0.118) | 1.35 ± 0.25 | 3.0 | CGAT-R-9/3-0 |
| 12/4† | 12.0 (0.472) | 4.0 (0.157) | 1.50 ± 0.25 | 2.5 | CGAT-R-12/4-0 |
| 18/6† | 18.0 (0.709) | 6.0 (0.236) | 1.70 ± 0.25 | 2.0 | CGAT-R-18/6-0 |
| 24/8† | 24.0 (0.945) | 8.0 (0.315) | 1.90 ± 0.25 | 1.5 | CGAT-R-24/8-0 |
| KIT CONTAINS SIZES INDICATED BY † (black only) | | | | | CGAT-R-KIT-1 |

*Wall thickness will be less if tubing recovery is restricted during shrinkage.

### Ordering Information

| | | |
|---|---|---|
| Color | Standard | Black (-0) |
| Size selection | Always order the largest size that will shrink snugly over the component to be covered. | |
| Standard packaging | On mini spools. | |
| Ordering description | See above for description | |





Catalog 1654025
Revised 3-13

www.te.com

Dimensions are shown for reference purposes only. Specifications subject to change.

Dimensions are in millimeters unless otherwise specified.

USA: +1 800 522 6752
Asia Pacific: +86 0 400 820 6015
UK: +44 800 267 666

For additional support numbers please visit www.te.com

## RHW

### Rugged, Heavy Wall, Adhesive-Lined, Polyolefin Heat-Shrinkable Tubing

### Product Facts

- **Withstands mechanical abuse for increased product reliability**
- **Highly resistant to impact and abrasion**
- **Provides high level of strain relief when installed on splices and joints**
- **Resistant to chemicals, moisture and oils**
- **Provides a complete moisture-proof seal preventing corrosion of underlying components**
- **RoHS compliant**

### Applications

Rugged, heavy wall RHW tubing is specifically designed for insulating, protecting and sealing electrical connections and joints in low-voltage cables. It provides splice insulation thickness equal to or greater than standard wire insulation manufactured to common industry standards.

RHW is a suitable choice for applications where maximum reliability and product performance, and simplified installation are required. Because RHW is heat-shrinkable, a minimum number of sizes are needed to cover a wide range of cables and splice diameters.

### Installation

Minimum shrink temperature: 110°C [230°F]

Minimum full recovery temperature: 125°C [257°F]

### Operating Temperature Range

-55°C to 110°C
[-67°F to 230°F]

### Specifications/Approvals

| Series | UL* | TE |
|---|---|---|
| RHW | File E91151 | RHW SCD |

*Sizes 9/3 through 70/21 only.

| Available in: | Americas | Europe | Asia Pacific |
|---|---|---|---|
| | ■ | ■ | ■ |



Catalog 1654025
Revised 3-13

www.te.com

Dimensions are shown for reference purposes only. Specifications subject to change.

Dimensions are in millimeters unless otherwise specified.

USA: +1 800 522 6752
Asia Pacific: +86 0 400 820 6015
UK: +44 800 267 666

For additional support numbers please visit www.te.com

## RHW (Continued)

### Product Dimensions

| Size | Inside Diameter | | Recovered Wall Thickness** | |
|---|---|---|---|---|
| | Minimum Expanded as Supplied | Recovered After Heating | Nominal Jacket Wall | Nominal Adhesive Wall |
| 9/3 | 9 [0.354] | 3 [0.118] | 2.0 [0.079] | 0.25 [0.010] |
| 13/4 | 13 [0.512] | 4 [0.158] | 2.4 [0.094] | 0.30 [0.012] |
| 20/6 | 20 [0.787] | 6 [0.236] | 2.5 [0.098] | 0.35 [0.014] |
| 33/8 | 33 [1.299] | 8 [0.315] | 3.2 [0.126] | 0.35 [0.014] |
| 43/12 | 43 [1.693] | 12 [0.472] | 4.3 [0.169] | 0.40 [0.016] |
| 51/16 | 51 [2.008] | 16 [0.630] | 4.5 [0.177] | 0.40 [0.016] |
| 70/21 | 70 [2.756] | 21 [0.827] | 4.4 [0.173] | 0.40 [0.016] |
| 85/25 | 85 [3.346] | 25 [0.984] | 4.3 [0.169] | 0.40 [0.016] |
| 105/30 | 105 [4.134] | 30 [1.181] | 4.3 [0.169] | 0.45 [0.018] |
| 130/36 | 130 [5.118] | 36 [1.417] | 4.3 [0.169] | 0.45 [0.018] |
| 160/50 | 160 [6.299] | 50 [1.968] | 4.3 [0.169] | 0.45 [0.018] |
| 180/50 | 180 [7.087] | 50 [1.968] | 4.3 [0.169] | 0.50 [0.020] |

**Wall thickness will be less if tubing recovery is restricted during shrinkage.

### Ordering Information

| | |
|---|---|
| Color | Standard Black (-0) |
| Size selection | Always order the largest size that will shrink snugly over the component to be covered. Special order sizes are available upon request. |
| Standard packaging*** | 1200mm lengths |
| Marking | Tubing will be marked with the product name, size and batch number. Sizes 9/3 through 70/21 will also be marked with the UL Logo |
| Ordering description | Specify product name, size, cut length, coating option and color (for example, RHW 20/6-1200/ADH-0 (ADH = Adhesive-lined, 0= Black |

***Europe only. Standard packaging 1000mm lengths





Catalog 1654025
Revised 3-13

www.te.com

Dimensions are shown for reference purposes only. Specifications subject to change.

Dimensions are in millimeters unless otherwise specified.

USA: +1 800 522 6752
Asia Pacific: +86 0 400 820 6015
UK: +44 800 267 666

For additional support numbers please visit www.te.com

## RMW

### Medium Wall, Polyolefin Heat-Shrinkable Tubing

### Product Facts

- Withstands mechanical abuse for increased product reliability
- Highly resistant to impact and abrasion
- Installation is fast and easy
- Resistant to chemicals and moisture
- Adhesive-lined version provides a complete moisture-proof seal preventing corrosion of underlying components
- RoHS compliant

### Applications

Medium wall, general purpose RMW tubing is specifically designed for use in a broad range of low-voltage applications. RMW is tough and flexible, making it particularly suited for the insulation and protection of cable joints as well as for cable repair. Uncoated RMW provides insulation and strain relief. Adhesive-lined RMW also provides an environmental seal.

RMW is a suitable choice for applications where maximum reliability and product performance, and simplified installation are required. Because RMW is heat-shrinkable, a minimum number of sizes are needed to cover a wide range of cables and splice diameters.

### Installation

Minimum shrink temperature: 110°C [230°F]

Minimum full recovery temperature: 125°C [257°F]

### Operating Temperature Range

-55°C to 110°C
[-67°F to 230°F]

### Specifications/Approvals

| Series | TE |
|---|---|
| RMW | RMW SCD |

| Available in: | Americas | Europe | Asia Pacific |
|---|---|---|---|
| | ■ | ■ | ■ |



Catalog 1654025
Revised 3-13

www.te.com

Dimensions are shown for reference purposes only. Specifications subject to change.

Dimensions are in millimeters unless otherwise specified.

USA: +1 800 522 6752
Asia Pacific: +86 0 400 820 6015
UK: +44 800 267 666

For additional support numbers please visit www.te.com

## RMW (Continued)

### Product Dimensions

| Size | Inside Diameter | | Recovered Wall Thickness** |
|---|---|---|---|
| | Minimum Expanded as Supplied | Recovered After Heating | Nominal Jacket Wall |
| 10/3 | 10 [0.394] | 3 [0.118] | 1.0 [0.039] |
| 16/5 | 16 [0.630] | 5 [0.197] | 1.4 [0.055] |
| 25/8 | 25 [0.984] | 8 [0.315] | 2.0 [0.079] |
| 35/12 | 35 [1.378] | 12 [0.472] | 2.0 [0.079] |
| 50/16 | 50 [1.968] | 16 [0.630] | 2.0 [0.079] |
| 63/19 | 63 [2.480] | 19 [0.748] | 2.4 [0.095] |
| 75/22 | 75 [2.953] | 22 [0.866] | 2.7 [0.106] |
| 85/25 | 85 [3.346] | 25 [0.984] | 2.8 [0.110] |
| 95/29 | 95 [3.740] | 29 [1.142] | 3.1 [0.122] |
| 115/34 | 115 [4.527] | 34 [1.339] | 3.1 [0.122] |
| 140/42 | 140 [5.512] | 42 [1.654] | 3.1 [0.122] |
| 160/50 | 160 [6.299] | 50 [1.968] | 3.2 [0.126] |
| 180/60 | 180 [7.087] | 60 [2.362] | 3.2 [0.126] |

**Wall thickness will be less if tubing recovery is restricted during shrinkage.

### Ordering Information

| | |
|---|---|
| Color | Standard Black (-0) |
| Size selection | Always order the largest size that will shrink snugly over the component to be covered. Special order sizes are available upon request. |
| Standard packaging*** | 1200mm lengths |
| Marking | Tubing will be marked with the product name, size and batch number. |
| Ordering description | Specify product name, size, cut length, coating option and color (for example, RMW 25/8-1200/ADH-0 or RMW 75/22-1200/U-0 (ADH = Adhesive-lined, U = Uncoated, 0= Black) |

***Europe only. Standard packaging 1000mm lengths





Catalog 1654025
Revised 3-13

www.te.com

Dimensions are shown for reference purposes only. Specifications subject to change.

Dimensions are in millimeters unless otherwise specified.

USA: +1 800 522 6752
Asia Pacific: +86 0 400 820 6015
UK: +44 800 267 666

For additional support numbers please visit www.te.com

## RNF-100

### Flexible, Flame-Retardant, General Purpose, Polyolefin Tubing

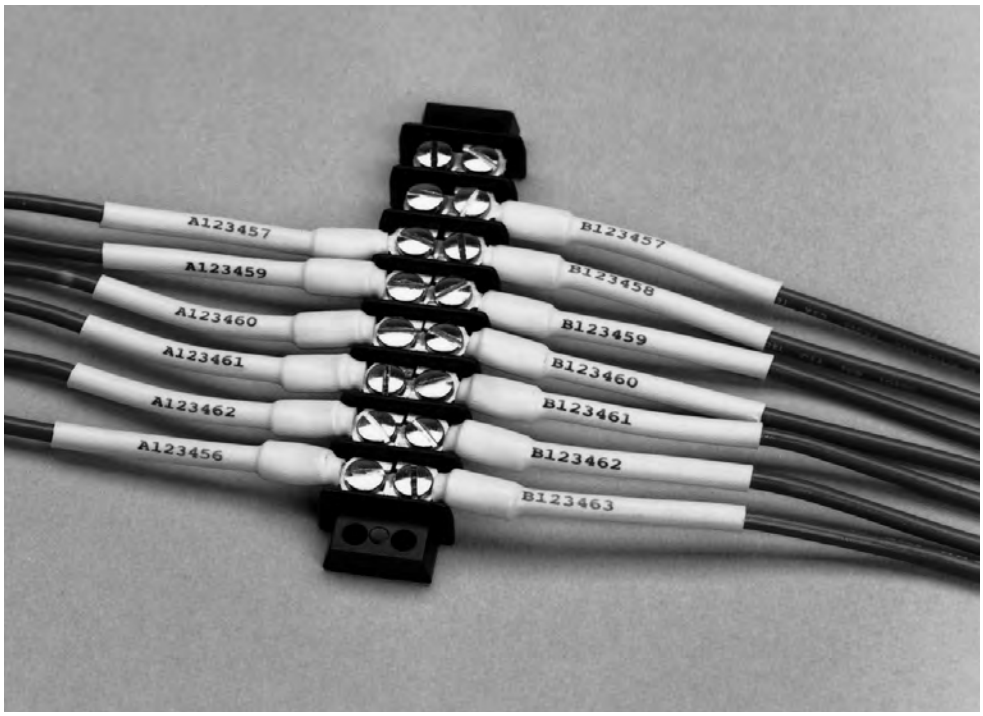


### Product Facts

- 2:1 shrink ratio
- Superior abrasion and solvent resistance when compared with that of many flexible, general purpose polyolefin tubings
- Excellent physical, chemical, and electrical properties that meet or exceed industrial and military standards for highly reliable, general purpose tubing
- Flexible; conforms to irregular shapes
- Flame-retardant (colors only)
- Wide range of sizes and colors
- RoHS compliant

### Applications

Designed to provide superior mechanical (abrasion, cut-through, and strain relief), thermal, and fluid-resistance performance in demanding environments. Widely used to provide insulation and strain relief of wire terminations and connections. Used for jacketing wire bundles and light-duty harnesses where superior abrasion resistance is a plus. Also used to identify and color-code electrical connections and wire bundles.

### Installation

Minimum shrink temperature: 95°C [203°F]

Minimum full recovery temperature: 121°C [250°F]

### Operating Temperature Range

-55°C to 135°C
[-67°F to 275°F]

### Specifications/Approvals

| Series | UL | CSA | Military | Industry | TE |
|---|---|---|---|---|---|
| RNF-100 Type 1 (colors) | E35586<br>600 V, 125°C | LR31929<br>600 V, 125°C | AMS-DTL-23053/5*, Class 1<br>Def. Stan. 59-97 Type 2B | VDE 0341 Pt 9005 Type A and B | RT-350, Type 1<br>RK-6001 |
| RNF-100 Type 2 (clear) | — | — | AMS-DTL-23053/5*, Class 2<br>VG 95343 Pt 5 Type B | — | RT-350, Type 2<br>RK-6001 |

*Formerly MIL-I-23053/5 and MIL-DTL-23053/5.

| Available in: | Americas | Europe | Asia Pacific |
|---|---|---|---|
| | ■ | ■ | ■ |



Catalog 1654025
Revised 3-13

www.te.com

Dimensions are shown for reference purposes only. Specifications subject to change.

Dimensions are in millimeters unless otherwise specified.

USA: +1 800 522 6752
Asia Pacific: +86 0 400 820 6015
UK: +44 800 267 666

For additional support numbers please visit www.te.com

## RNF-100 (Continued)

### Product Dimensions

| Size | Inside Diameter | | Recovered Wall Thickness** |
|---|---|---|---|
| | Minimum Expanded as Supplied | Maximum Recovered After Heating | After Heating |
| 3/64 | 1.2 [0.046] | 0.6 [0.023] | 0.40 ± 0.08 [0.016 ± 0.003] |
| 1/16 | 1.6 [0.063] | 0.8 [0.031] | 0.43 ± 0.08 [0.017 ± 0.003] |
| 3/32 | 2.4 [0.093] | 1.2 [0.046] | 0.51 ± 0.08 [0.020 ± 0.003] |
| 1/8 | 3.2 [0.125] | 1.6 [0.062] | 0.51 ± 0.08 [0.020 ± 0.003] |
| 3/16 | 4.8 [0.187] | 2.4 [0.093] | 0.51 ± 0.08 [0.020 ± 0.003] |
| 1/4 | 6.4 [0.250] | 3.2 [0.125] | 0.64 ± 0.08 [0.025 ± 0.003] |
| 3/8 | 9.5 [0.375] | 4.8 [0.187] | 0.64 ± 0.08 [0.025 ± 0.003] |
| 1/2 | 12.7 [0.500] | 6.4 [0.250] | 0.64 ± 0.08 [0.025 ± 0.003] |
| 3/4 | 19.1 [0.750] | 9.5 [0.375] | 0.76 ± 0.08 [0.030 ± 0.003] |
| 1 | 25.4 [1.000] | 12.7 [0.500] | 0.89 ± 0.12 [0.035 ± 0.005] |
| 1 1/4 | 31.8 [1.250] | 15.9 [0.625] | 1.02 ± 0.15 [0.040 ± 0.006] |
| 1 1/2 | 38.1 [1.500] | 19.1 [0.750] | 1.02 ± 0.15 [0.040 ± 0.006] |
| 2 | 50.8 [2.000] | 25.4 [1.000] | 1.14 ± 0.16 [0.045 ± 0.007] |
| 3 | 76.2 [3.000] | 38.1 [1.500] | 1.27 ± 0.20 [0.050 ± 0.008] |
| 4 | 101.6 [4.000] | 50.8 [2.000] | 1.40 ± 0.23 [0.055 ± 0.009] |
| 5 | 127.0 [5.000] | 63.5 [2.500] | 1.52 ± 0.23 [0.060 ± 0.009] |

**Wall thickness will be less if tubing recovery is restricted during shrinkage.

### Ordering Information

| | | |
|---|---|---|
| Color | Standard*** | Black (-0, BK), white (-9, WH), red (-2, RD), blue (-6, BU), yellow (-4, YO), green (-5, GN), clear (-X, CL) |
| | Nonstandard | Brown (-1, BN), orange (-3, OR), violet (-7, VT), gray (-8, GY) |
| Size selection | Always order the largest size that will shrink snugly over the component to be covered. Special order sizes are available upon request | |
| Standard packaging**** | On spools or in 1.2-meter [4-foot] lengths. | |
| Ordering description***** | Specify product name, size and color (for example, RNF-100 1/4-0 [Europe] or RNF-100 1/4-BK [Americas]. | |

***Green (-5, GN) is nonstandard in all sizes in Europe, and nonstandard in sizes 1-1/4 through 5-inches in Americas.
****Available in the convenient Mini-Spool packaging/dispensing system, for sizes 3/64" up to 1".
*****Europe only. For supply to MIL, Def Stan and BS add -MS, -DS or -BS to ordering description.





Catalog 1654025
Revised 3-13

www.te.com

Dimensions are shown for reference purposes only. Specifications subject to change.

Dimensions are in millimeters unless otherwise specified.

USA: +1 800 522 6752
Asia Pacific: +86 0 400 820 6015
UK: +44 800 267 666

For additional support numbers please visit www.te.com

## RNF-150

### High-Performance, Flame-Resistant, Flexible, Fluoropolymer Tubing

### Product Facts

- 2:1 shrink ratio
- Approximately 40 percent thinner walls than most general purpose polyolefin tubings
- High flame-resistance
- Excellent physical and electrical properties after exposure to many chemicals and solvents at 50°C [122°F] (but not recommended for use in direct contact with ketones)
- Recommended maximum temperature for use as a primary insulator: 135°C [275°F]
- RoHS compliant

### Applications

Can be used for jacketing and bundling of wires to form light-duty harnesses, especially where a low profile, abrasion resistance, and flexibility are needed. Can also be used to provide insulation and strain relief of electrical connections and wire terminations, identification of wires, and packaging of components.

### Installation

Minimum shrink temperature: 110°C [230°F]

Minimum full recovery temperature: 150°C [302°F]

### Operating Temperature Range

-55°C to 150°C
[-67°F to 302°F]

### Specifications/Approvals

| Series | UL | Military | TE |
|---|---|---|---|
| RNF-150 | E35586 VW-1<br>600 V, 150°C | AMS-DTL-23053/18*,<br>Class 2 | RT-370 |

*Formerly MIL-I-23053/18 and MIL-DTL-23053/18.

| Available in: | Americas | Europe | Asia Pacific |
|---|---|---|---|
| | ■ | ■ | ■ |



Catalog 1654025
Revised 3-13

www.te.com

Dimensions are shown for reference purposes only. Specifications subject to change.

Dimensions are in millimeters unless otherwise specified.

USA: +1 800 522 6752
Asia Pacific: +86 0 400 820 6015
UK: +44 800 267 666

For additional support numbers please visit www.te.com

## RNF-150 (Continued)

### Product Dimensions

| Size | Inside Diameter | | Recovered Wall Thickness** |
|---|---|---|---|
| | Minimum Expanded as Supplied | Maximum Recovered After Heating | After Heating |
| 3/64 | 1.2 [0.046] | 0.6 [0.023] | 0.25 ± 0.05 [0.010 ± 0.002] |
| 1/16 | 1.6 [0.063] | 0.8 [0.031] | 0.25 ± 0.05 [0.010 ± 0.002] |
| 3/32 | 2.4 [0.093] | 1.2 [0.046] | 0.25 ± 0.05 [0.010 ± 0.002] |
| 1/8 | 3.2 [0.125] | 1.6 [0.062] | 0.25 ± 0.05 [0.010 ± 0.002] |
| 3/16 | 4.8 [0.187] | 2.4 [0.093] | 0.25 ± 0.05 [0.010 ± 0.002] |
| 1/4 | 6.4 [0.250] | 3.2 [0.125] | 0.30 ± 0.08 [0.012 ± 0.003] |
| 3/8 | 9.5 [0.375] | 4.8 [0.187] | 0.30 ± 0.08 [0.012 ± 0.003] |
| 1/2 | 12.7 [0.500] | 6.4 [0.250] | 0.30 ± 0.08 [0.012 ± 0.003] |
| 3/4 | 19.1 [0.750] | 9.5 [0.375] | 0.43 ± 0.08 [0.017 ± 0.003] |
| 1 | 25.4 [1.000] | 12.7 [0.500] | 0.48 ± 0.08 [0.019 ± 0.003] |

**Wall thickness will be less if tubing recovery is restricted during shrinkage.

### Ordering Information

| | | |
|---|---|---|
| Color | Standard | Black (-0) |
| | Nonstandard | White (-9) |
| Size selection | Always order the largest size that will shrink snugly over the component to be covered. Special order sizes are available upon request. | |
| Standard packaging | On spools. | |
| Ordering description*** | Specify product name, size and color (for example, RNF-150 1/4-0). | |

***Europe only. For supply to MIL, Def Stan and BS add -MS, -DS or -BS to ordering description.





Catalog 1654025
Revised 3-13

www.te.com

Dimensions are shown for reference purposes only. Specifications subject to change.

Dimensions are in millimeters unless otherwise specified.

USA: +1 800 522 6752
Asia Pacific: +86 0 400 820 6015
UK: +44 800 267 666

For additional support numbers please visit www.te.com

## RNF-3000

### Flexible, High-Shrink-Ratio, Flame-Retardant, General Purpose, Polyolefin Tubing

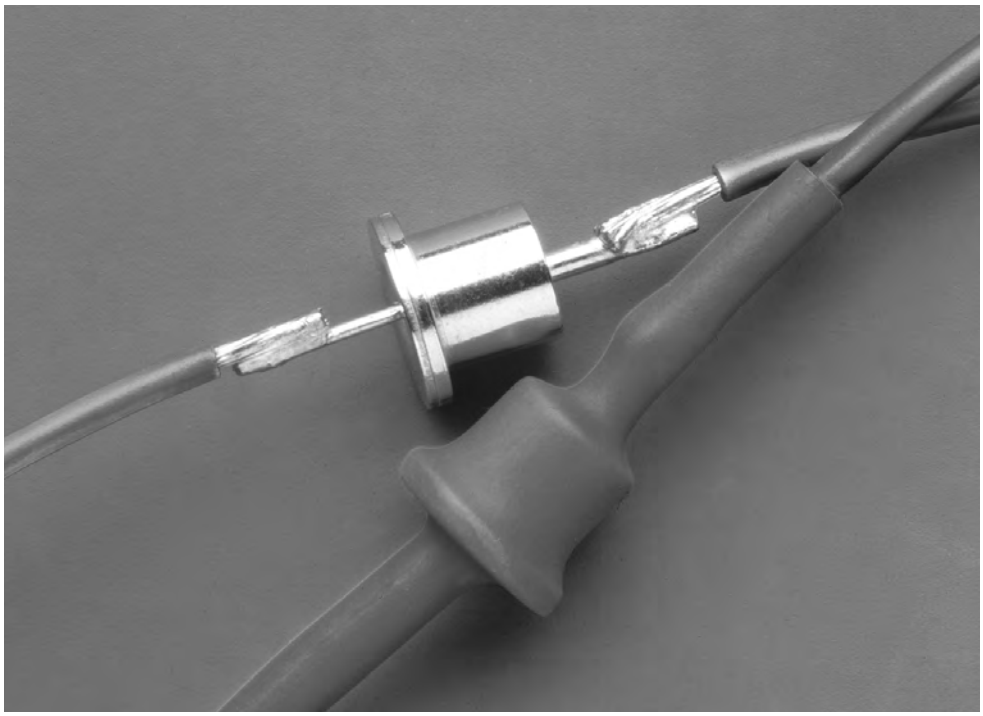

### Product Facts

- 3:1 shrink ratio easily accommodates awkward, irregular shapes
- Few sizes cover a wide range of diameters, allowing reduced inventory
- Excellent physical, chemical, and electrical properties meet industry standards for highly reliable, general purpose tubing
- Flame-retardant (colors only)
- RoHS compliant

### Applications

Used for insulation and strain relief of wire terminations and electrical connections. Also suitable for light-duty harnessing, jacketing, and identification of wires, cables, and electrical and electronic components.

### Installation

Minimum shrink temperature: 80°C [176°F]

Minimum full recovery temperature: 120°C [248°F]

### Operating Temperature Range

-55°C to 135°C
[-67°F to 275°F]

### Specifications/Approvals

| Series | UL | CSA | Military | Industry | TE |
|---|---|---|---|---|---|
| RNF-3000 | E35586<br>600 V, 125°C | LR31929<br>600 V, 125°C | Def. Stan. 59-97 Type 2B<br>VG 95343 Pt 5 Type A (color)<br>VG 95343 Pt 5 Type B (clear) | VDE 0341 Pt 9005<br>Type A and B | RW-2053 |

| Available in: | Americas | Europe | Asia Pacific |
|---|---|---|---|
| | ■ | ■ | ■ |



Catalog 1654025
Revised 3-13

www.te.com

Dimensions are shown for reference purposes only. Specifications subject to change.

Dimensions are in millimeters unless otherwise specified.

USA: +1 800 522 6752
Asia Pacific: +86 0 400 820 6015
UK: +44 800 267 666

For additional support numbers please visit www.te.com

## RNF-3000 (Continued)

### Product Dimensions

| Size | Inside Diameter | | Recovered Wall Thickness* |
|---|---|---|---|
| | Minimum Expanded as Supplied | Maximum Recovered After Heating | After Heating |
| 1.5/0.5 | 1.5 [0.060] | 0.5 [0.019] | 0.45 ± 0.10 [0.018 ± 0.003] |
| 3/1 | 3 [0.118] | 1 [0.039] | 0.55 ± 0.10 [0.022 ± 0.003] |
| 4.5/1.5 | 4.5 [0.177] | 1.5 [0.059] | 0.55 ± 0.10 [0.022 ± 0.003] |
| 6/2 | 6 [0.236] | 2 [0.079] | 0.65 ± 0.10 [0.026 ± 0.003] |
| 9/3 | 9 [0.354] | 3 [0.118] | 0.75 ± 0.12 [0.030 ± 0.004] |
| 12/4 | 12 [0.472] | 4 [0.157] | 0.75 ± 0.12 [0.030 ± 0.004] |
| 18/6 | 18 [0.709] | 6 [0.236] | 0.85 ± 0.12 [0.033 ± 0.004] |
| 24/8 | 24 [0.944] | 8 [0.315] | 1.00 ± 0.18 [0.039 ± 0.007] |
| 39/13 | 39 [1.534] | 13 [0.512] | 1.15 ± 0.20 [0.045 ± 0.008] |

*Wall thickness will be less if tubing recovery is restricted during shrinkage.

### Ordering Information

| | | |
|---|---|---|
| Color | Standard** | Black (-0), white (-9), red (-2), blue (-6), yellow (-4), clear (-X) |
| | Nonstandard | Brown (-1), orange (-3), green (-5), violet (-7), gray (-8) |
| Size selection | Always order the largest size that will shrink snugly over the component to be covered. Special order sizes are available upon request. | |
| Standard packaging*** | On spools or in 1.2-meter [4-foot] lengths. | |
| Ordering description**** | Specify product name, size and color (for example, RNF-3000 6/2-0). | |

**Black is the only standard color in the Americas. All other colors are nonstandard.
***Only spools are standard in the Americas. 1.2 meter [4-foot] lengths are nonstandard.
****Europe only. For supply to Def Stan and BS add -DS or -BS to ordering description.





Catalog 1654025
Revised 3-13

www.te.com

Dimensions are shown for reference purposes only. Specifications subject to change.

Dimensions are in millimeters unless otherwise specified.

USA: +1 800 522 6752
Asia Pacific: +86 0 400 820 6015
UK: +44 800 267 666

For additional support numbers please visit www.te.com

## RP-4800

### High-Shrink-Ratio, Flame-Retardant, Polyolefin Tubing

### Product Facts

- 4:1 shrink ratio
- Conforms well to highly variable substrate dimensions
- Has excellent physical, chemical, and electrical properties that meet or exceed industrial and military standards
- Shows no significant degradation when exposed to common solvents and chemicals, including aviation fuel and hydraulic fluid
- RoHS compliant

### Applications

Well-suited for repairing harnesses or cables; will pass over a large-diameter connector or transition, and then shrink down onto a smaller-diameter jacket. Can insulate or protect a substrate of varying dimensions. Also provides the abrasion and fluid resistance required in harnessing applications.

### Installation

Minimum shrink temperature: 95°C [203°F]

Minimum full recovery temperature: 121°C [250°F]

### Operating Temperature Range

-55°C to 135°C
[-67°F to 275°F]

### Specifications/Approvals

| Series | UL | Military | Industry | TE |
|---|---|---|---|---|
| RP-4800 | E35586<br>600V, 125°C<br>(black only) | AMS-DTL-23053/5*,<br>Class 1 Overexpanded<br>VG 95343 Pt 5 Type A | VDE 0341 Pt 9005 Type A | RT-1122 |

*Formerly MIL-I-23053/5 and MIL-DTL-23053/5.

| Available in: | Americas | Europe | Asia Pacific |
|---|---|---|---|
| | ■ | ■ | ■ |



Catalog 1654025
Revised 3-13

www.te.com

Dimensions are shown for reference purposes only. Specifications subject to change.

Dimensions are in millimeters unless otherwise specified.

USA: +1 800 522 6752
Asia Pacific: +86 0 400 820 6015
UK: +44 800 267 666

For additional support numbers please visit www.te.com

## RP-4800 (Continued)

### Product Dimensions

| Size | Inside Diameter | | Recovered Wall Thickness** |
|---|---|---|---|
| | Minimum Expanded as Supplied | Maximum Recovered After Heating | After Heating |
| No. 1 | 25.4 [1.000] | 7.0 [0.275] | 1.14 ± 0.18 [0.045 ± 0.007] |
| No. 2 | 50.8 [2.000] | 14.0 [0.550] | 1.14 ± 0.18 [0.045 ± 0.007] |
| No. 3 | 76.2 [3.000] | 20.6 [0.810] | 1.14 ± 0.18 [0.045 ± 0.007] |
| No. 4 | 101.6 [4.000] | 26.7 [1.050] | 1.14 ± 0.18 [0.045 ± 0.007] |
| No. 5 | 25.4 [1.000] | 11.7 [0.462] | 1.14 ± 0.18 [0.045 ± 0.007] |
| No. 6 | 60.3 [2.375] | 17.3 [0.680] | 1.14 ± 0.18 [0.045 ± 0.007] |
| No. 7 | 76.2 [3.000] | 21.3 [0.840] | 1.14 ± 0.18 [0.045 ± 0.007] |
| No. 8 | 95.3 [3.750] | 23.6 [0.930] | 1.14 ± 0.18 [0.045 ± 0.007] |
| No. 9 | 114.3 [4.500] | 36.8 [1.450] | 1.14 ± 0.18 [0.045 ± 0.007] |
| No. 10 | 38.1 [1.500] | 9.5 [0.375] | 1.14 ± 0.18 [0.045 ± 0.007] |
| No. 11 | 19.1 [0.750] | 4.6 [0.180] | 1.14 ± 0.18 [0.045 ± 0.007] |

**Wall thickness will be less if tubing recovery is restricted during shrinkage.

### Ordering Information

| | | |
|---|---|---|
| Color | Standard | Black (-0) |
| | Nonstandard | White (-9), red (-2), blue (-6), yellow (-4), green (-5), brown (-1), orange (-3), violet (-7), gray (-8) |
| Size selection | Always order the largest size that will shrink snugly over the component to be covered. Special order sizes are available upon request. | |
| Standard packaging | On spools or in 1.2-meter [4-foot] lengths. | |
| Ordering description*** | Specify product name, size and color (for example, RP-4800 NO.1-0). | |

***Europe only. For supply to MIL, Def Stan and BS add -MS, -DS or -BS to ordering description.





Catalog 1654025
Revised 3-13

www.te.com

Dimensions are shown for reference purposes only. Specifications subject to change.

Dimensions are in millimeters unless otherwise specified.

USA: +1 800 522 6752
Asia Pacific: +86 0 400 820 6015
UK: +44 800 267 666

For additional support numbers please visit www.te.com

## RPPM

### Flexible, Dual Wall, Moisture-Proof, Heat-Shrinkable Tubing

### Product Facts

- Environmental sealing
- Excellent mechanical strength
- Abrasion resistance
- 4:1 shrink ratio
- RoHS compliant

### Applications

RPPM is a flexible, heat-shrinkable, dual wall tubing with an integrally bonded meltable adhesive liner. Available in clear and black, the tough outer jacket offers excellent mechanical strength. RPPM is used for moisture-proof encapsulation of a wide variety of components. In particular, it adheres well to PVC. The high-shrink-ratio allows RPPM to be used with a range of dimensions. Clear RPPM offers excellent clarity for protection of substrates that may need to be inspected during service. Black RPPM has a high gloss finish suitable for cosmetic applications.

### Installation

Minimum shrink temperature: 60°C [140°F]

Minimum full recovery temperature: 80°C [176°F]

### Operating Temperature Range

-40°C to 85°C
[-40°F to 185°F]

### Specifications/Approvals

| Series | TE |
|---|---|
| RPPM | RK-6214 |

| Available in: | Americas | Europe | Asia Pacific |
|---|---|---|---|
| | ■ | ■ | ■ |



Catalog 1654025
Revised 3-13

www.te.com

Dimensions are shown for reference purposes only. Specifications subject to change.

Dimensions are in millimeters unless otherwise specified.

USA: +1 800 522 6752
Asia Pacific: +86 0 400 820 6015
UK: +44 800 267 666

For additional support numbers please visit www.te.com

## RPPM (Continued)

### Product Dimensions

| Size | Inside Diameter | | Recovered Wall Thickness* | |
|---|---|---|---|---|
| | Minimum Expanded as Supplied | Maximum Recovered After Heating | Nominal Total Wall After Heating | Nominal Adhesive Wall After Heating |
| 4/1 | 4.0 [0.158] | 1.0 [0.039] | 0.8 [0.032] | 0.3 [0.012] |
| 8/2 | 8.0 [0.315] | 2.0 [0.079] | 0.9 [0.035] | 0.3 [0.012] |
| 12/3 | 12.0 [0.472] | 3.0 [0.118] | 1.2 [0.047] | 0.4 [0.016] |
| 16/4 | 16.0 [0.630] | 4.0 [0.158] | 1.5 [0.059] | 0.5 [0.020] |

*Wall thickness will be less if tubing recovery is restricted during shrinkage.



### Ordering Information

| | | |
|---|---|---|
| Color | Standard | Clear (-X) |
| | Nonstandard | Black (-0) |
| Size selection | Always order the largest size that will shrink snugly over the component to be covered. Special order sizes are available upon request. | |
| Standard packaging | On spools, in 1.2 meter [4-foot] lengths or cut pieces. | |
| Ordering description | Specify product name, size and color (for example, RPPM 4/1-X). | |



Dimensions are shown for reference purposes only. Specifications subject to change.

Dimensions are in millimeters unless otherwise specified.

USA: +1 800 522 6752
Asia Pacific: +86 0 400 820 6015
UK: +44 800 267 666

For additional support numbers please visit www.te.com

## RT-3

### Semirigid, Flame-Retardant, Polyolefin Tubing

### Product Facts

- 2.5:1 shrink ratio
- Tightly controlled expanded diameters
- High abrasion resistance
- Semirigidity that transfers flex stress away from typically weak points such as solder and crimp joints, helping to ensure a reliable connection
- Excellent chemical and solvent resistance
- Outstanding physical and electrical performance
- RoHS compliant

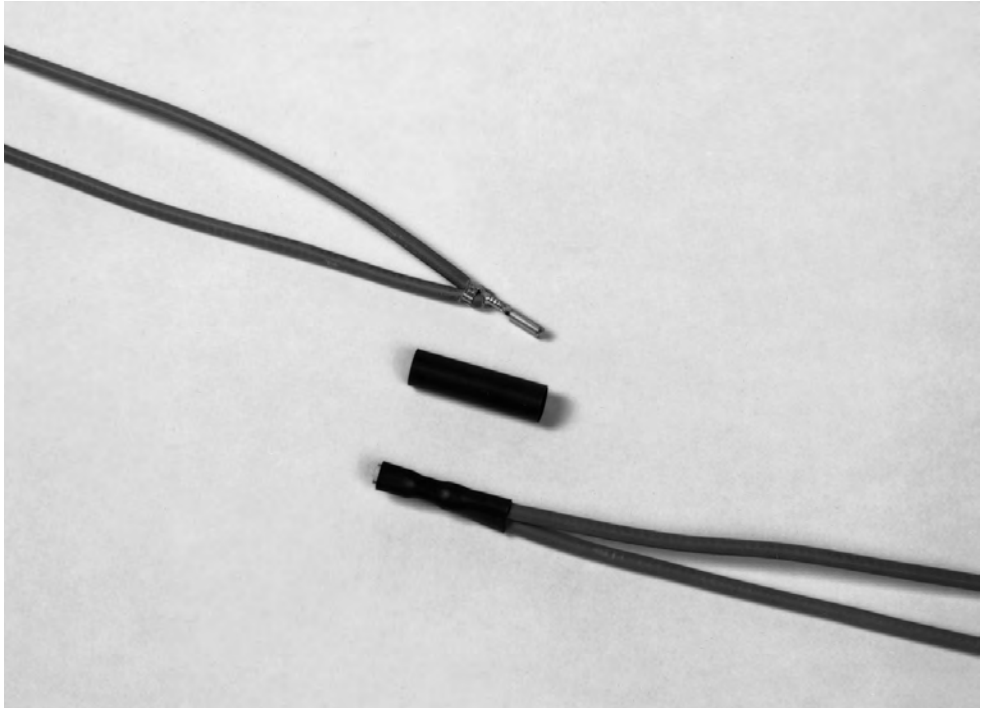

### Applications

Suitable for wire strain-relief applications — soldered or crimped connections, wire splices, terminations. Well-suited for use with semiautomated production equipment requiring tubing with a tightly controlled expanded diameter. Acts as a tough covering for delicate components; provides mechanical protection.

### Installation

Minimum shrink temperature: 110°C [230°F]

Minimum full recovery temperature: 135°C [275°F]

### Operating Temperature Range

-55°C to 135°C
[-67°F to 275°F]

### Specifications/Approvals

| Series | UL | CSA | TE |
|---|---|---|---|
| RT-3 | E35586<br>600 V, 125°C | LR31929 (black only)<br>600 V, 125°C | RT-360* |

*Except dimensions and longitudinal change.

| Available in: | Americas | Europe | Asia Pacific |
|---|---|---|---|
| | ■ | | ■ |



Catalog 1654025
Revised 3-13

www.te.com

Dimensions are shown for reference purposes only. Specifications subject to change.

Dimensions are in millimeters unless otherwise specified.

USA: +1 800 522 6752
Asia Pacific: +86 0 400 820 6015
UK: +44 800 267 666

For additional support numbers please visit www.te.com

## RT-3 (Continued)

### Product Dimensions

| Size | Inside Diameter | | Recovered Wall Thickness** |
|---|---|---|---|
| | Minimum Expanded as Supplied | Maximum Recovered After Heating | After Heating |
| No. 1 | 6.1 ± 0.4 [0.240 ± 0.015] | 2.4 [0.095] | 0.79 ± 0.08 [0.031 ± 0.003] |
| No. 2 | 8.1 ± 0.4 [0.320 ± 0.015] | 3.2 [0.125] | 0.79 ± 0.08 [0.031 ± 0.003] |
| No. 3 | 9.5 ± 0.5 [0.375 ± 0.020] | 3.8 [0.150] | 0.79 ± 0.08 [0.031 ± 0.003] |
| No. 4 | 12.3 ± 0.5 [0.485 ± 0.020] | 5.1 [0.200] | 0.79 ± 0.08 [0.031 ± 0.003] |

**Wall thickness will be less if tubing recovery is restricted during shrinkage.



### Ordering Information

| | |
|---|---|
| Color | Black (-0) only |
| Size selection | Always order the largest size that will shrink snugly over the component to be covered. Special order sizes are available upon request. |
| Standard packaging | In 1-inch cut pieces or in 1.2-meter [4-foot] lengths. |
| Ordering description | Specify product name, size and color (for example, RT-3 No. 1-0). |



Dimensions are shown for reference purposes only. Specifications subject to change.

Dimensions are in millimeters unless otherwise specified.

USA: +1 800 522 6752
Asia Pacific: +86 0 400 820 6015
UK: +44 800 267 666

For additional support numbers please visit www.te.com

## RT-375

### Clear, Flame-Resistant, Flexible, Fluoropolymer Tubing

### Product Facts

- 2:1 shrink ratio
- Exceptional clarity and clarity stability
- Toughness, chemical resistance, and high-temperature performance
- High flame-resistance
- Approximately 40 percent thinner walls than most general purpose polyolefin tubings
- Recommended maximum temperature for use as a primary insulator: 135°C [275°F]
- RoHS compliant

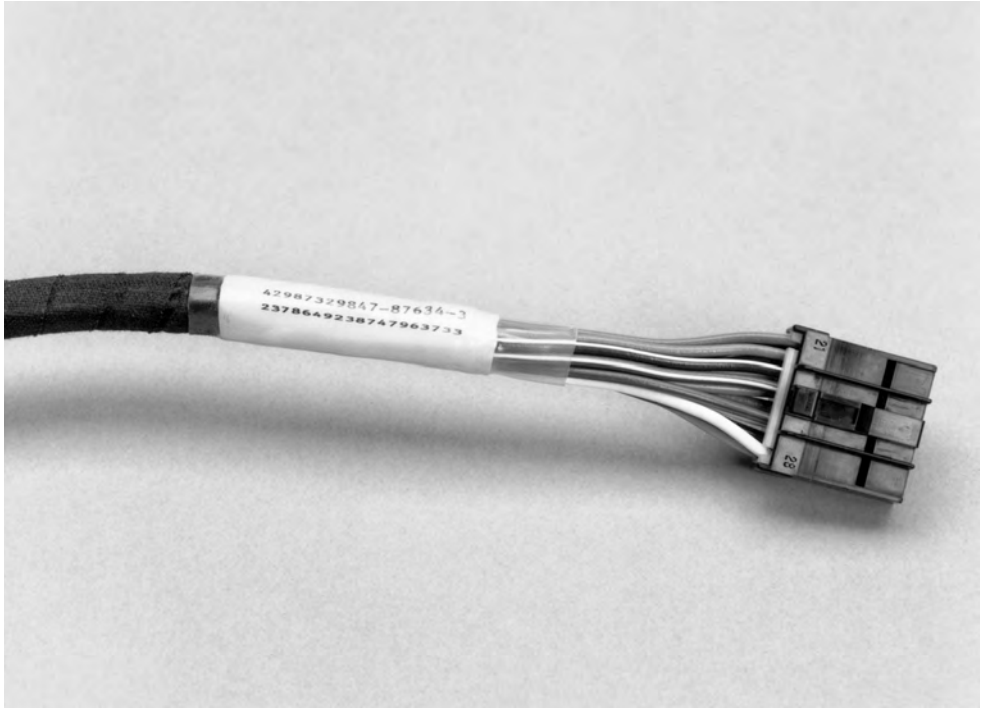

### Applications

Protects wire and cable markers subject to extreme abuse, while permitting full inspectability of each item covered. Provides bundling and jacketing of wires and cables, protecting them from mechanical and chemical abuse. Protects electronic components while permitting their identification and inspection.

### Installation

Minimum shrink temperature: 125°C [257°F]

Minimum full recovery temperature: 150°C [302°F]

### Operating Temperature Range

-55°C to 150°C
[-67°F to 302°F]

### Specifications/Approvals

| Series | UL | CSA | Military | TE |
|---|---|---|---|---|
| RT-375 | E35586 VW-1<br>600 V, 150°C | LR31929 VW-1<br>600 V, 150°C | AMS-DTL-23053/18*, Class 2 | RT-375 |

*Formerly MIL-I-23053/18 and MIL-DTL-23053/18.

| Available in: | Americas | Europe | Asia Pacific |
|---|---|---|---|
| | ■ | ■ | ■ |



Catalog 1654025
Revised 3-13

www.te.com

Dimensions are shown for reference purposes only. Specifications subject to change.

Dimensions are in millimeters unless otherwise specified.

USA: +1 800 522 6752
Asia Pacific: +86 0 400 820 6015
UK: +44 800 267 666

For additional support numbers please visit www.te.com

## RT-375 (Continued)

### Product Dimensions

| Size | Inside Diameter | | Recovered Wall Thickness** |
|---|---|---|---|
| | Minimum Expanded as Supplied | Maximum Recovered After Heating | After Heating |
| 3/64 | 1.2 [0.046) | 0.6 [0.023] | 0.25 ± 0.05 [0.010 ± 0.002] |
| 1/16 | 1.6 [0.063] | 0.8 [0.031] | 0.25 ± 0.05 [0.010 ± 0.002] |
| 3/32 | 2.4 [0.093] | 1.2 [0.046] | 0.25 ± 0.05 [0.010 ± 0.002] |
| 1/8 | 3.2 [0.125] | 1.6 [0.062] | 0.25 ± 0.05 [0.010 ± 0.002] |
| 3/16 | 4.8 [0.187] | 2.4 [0.093] | 0.25 ± 0.05 [0.010 ± 0.002] |
| 1/4 | 6.4 [0.250] | 3.2 [0.125] | 0.30 ± 0.08 [0.012 ± 0.003] |
| 3/8 | 9.5 [0.375] | 4.8 [0.187] | 0.30 ± 0.08 [0.012 ± 0.003] |
| 1/2 | 12.7 [0.500] | 6.4 [0.250] | 0.30 ± 0.08 [0.012 ± 0.003] |
| 3/4 | 19.1 [0.750] | 9.5 [0.375] | 0.43 ± 0.08 [0.017 ± 0.003] |
| 1 | 25.4 [1.000] | 12.7 [0.500] | 0.48 ± 0.08 [0.019 ± 0.003] |

**Wall thickness will be less if tubing recovery is restricted during shrinkage.

### Ordering Information

| | |
|---|---|
| Color | Standard Clear (-X) |
| Size selection | Always order the largest size that will shrink snugly over the component to be covered. Special order sizes are available upon request. |
| Standard packaging | On spools. |
| Ordering description*** | Specify product name, size and color (for example, RT-375 1/4-X). |

***Europe only. For supply to MIL, Def Stan and BS add -MS, -DS or -BS to ordering description.





Catalog 1654025
Revised 3-13

www.te.com

Dimensions are shown for reference purposes only. Specifications subject to change.

Dimensions are in millimeters unless otherwise specified.

USA: +1 800 522 6752
Asia Pacific: +86 0 400 820 6015
UK: +44 800 267 666

For additional support numbers please visit www.te.com

## RT555

### Fluid-Resistant, Chemical-Resistant, Crosslinked Fluoropolymer Tubing with Extended Temperature Range

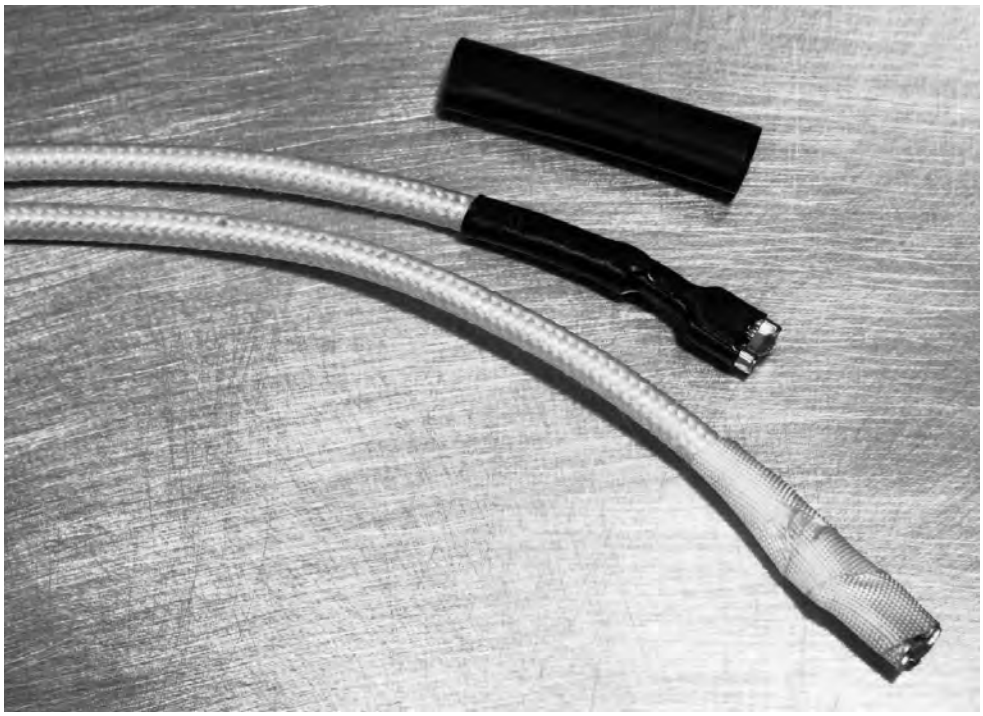

### Product Facts

- Resistance to high temperatures, solvents, corrosive chemicals, and radiation
- Extreme resistance to hydrocarbons
- Low outgassing (successfully tested for NASA outgassing requirements)
- Highly flame-retardant
- 40 percent lighter weight than tubing made with Viton® fluoroelastomer
- System 300 tubing
- RoHS compliant

### Applications

Suitable for commercial applications requiring heat resistance (electrical and hydraulic systems near aircraft or automotive engines or in fuel tanks), applications in chemically exposed environments (industrial process equipment in the pulp and paper, steel, and chemical industries), and equipment for handling caustic or dangerous chemicals or inks. Use for insulation and strain relief on appliances (electric ranges, microwave ovens, gas grills, and industrial paint-drying equipment) and for protection of delicate electronic instruments in down-hole applications.

### Installation

Minimum shrink temperature: 150°C [302°F]

Minimum full recovery temperature: 220°C [428°F]

### Operating Temperature Range

-65°C to 200°C
[-85°F to 392°F]

### Specifications/Approvals

| Series | UL | TE |
|---|---|---|
| RT555 | Listed for 185°C for 100,000-hr continuous use (File E85381)<br>Listed for 200°C for 40,000-hr cumulative intermittent exposure | RT-555 |

| Available in: | Americas | Europe | Asia Pacific |
|---|---|---|---|
| | ■ | ■ | ■ |

Viton is a trademark of Dupont Performance Elastomers LLC.



Catalog 1654025
Revised 3-13

www.te.com

Dimensions are shown for reference purposes only. Specifications subject to change.

Dimensions are in millimeters unless otherwise specified.

USA: +1 800 522 6752
Asia Pacific: +86 0 400 820 6015
UK: +44 800 267 666

For additional support numbers please visit www.te.com

## RT555 (Continued)

### Product Dimensions

| Size | Inside diameter | | Recovered wall thickness* After heating | | |
|---|---|---|---|---|---|
| | Minimum expanded as supplied | Maximum recovered after heating | Minimum | Maximum | Nominal |
| 1/8 | 3.18 [0.125] | 1.57 [0.062] | 0.25 [0.010] | 0.41 [0.016] | 0.30 [0.012] |
| 3/16 | 4.75 [0.187] | 2.36 [0.093] | 0.28 [0.011] | 0.46 [0.018] | 0.36 [0.014] |
| 1/4 | 6.35 [0.250] | 3.18 [0.125] | 0.33 [0.013] | 0.51 [0.020] | 0.41 [0.016] |
| 3/8 | 9.53 [0.375] | 4.75 [0.187] | 0.41 [0.016] | 0.58 [0.023] | 0.48 [0.019] |
| 1/2 | 12.70 [0.500] | 6.35 [0.250] | 0.41 [0.016] | 0.58 [0.023] | 0.48 [0.019] |
| 5/8 | 15.88 [0.625] | 7.95 [0.313] | 0.48 [0.019] | 0.66 [0.026] | 0.56 [0.022] |
| 3/4 | 19.05 [0.750] | 9.53 [0.375] | 0.61 [0.024] | 0.79 [0.031] | 0.69 [0.027] |
| 1 | 25.40 [1.000] | 12.70 [0.500] | 0.71 [0.028] | 0.89 [0.035] | 0.79 [0.031] |
| 1 1/4 | 31.75 [1.250] | 15.88 [0.625] | 0.76 [0.030] | 0.94 [0.037] | 0.84 [0.033] |
| 1 1/2 | 38.10 [1.500] | 19.05 [0.750] | 0.86 [0.034] | 1.04 [0.041] | 0.94 [0.037] |
| 2 | 50.80 [2.000] | 25.40 [1.000] | 0.94 [0.037] | 1.12 [0.044] | 1.02 [0.040] |

*Wall thickness will be less if tubing recovery is restricted during shrinkage.

### Ordering Information

| | | |
|---|---|---|
| Color | Standard | Black (-0) |
| Size selection | Always order the largest size that will shrink snugly over the component to be covered. Special order sizes are available upon request. | |
| Standard packaging | On spools. | |
| Ordering description | Specify product name, size and color (for example, RT555 1/8-0-SP). | |

### Part Numbering

| RT555 | - 1/8 | -0 | -SP |
|---|---|---|---|
| Material | Size | Color | Package |





Catalog 1654025
Revised 3-13

www.te.com

Dimensions are shown for reference purposes only. Specifications subject to change.

Dimensions are in millimeters unless otherwise specified.

USA: +1 800 522 6752
Asia Pacific: +86 0 400 820 6015
UK: +44 800 267 666

For additional support numbers please visit www.te.com

## High Temperature Sealing Sleeves

### High Temperature, Heat Shrinkable, Fluid Resistant Sealing Sleeves

High temperature fluoropolymer sealing sleeve provides a robust, lightweight cover which shrinks to environmentally seal in-line compression joints and terminal lugs.

### Product Facts

- **Sealing material is pre-installed in high temperature heat shrink sleeve**
- **No oven curing equipment needed**
- **Available in four product sizes in two different lengths**
- **Labor saving preinstall sealing sleeves**
- **Temperature and fluid resistant fluoropolymer tubing rated to 200˚C continuous with excursions to 260˚C**
- **TE's product is thin, tough and lightweight with robust fluid resistance**

### Applications

High temperature circuit lug and splice covers

Aerospace

Ground Vehicles

Commercial Aviation

### Materials

Insulation Sleeve:

Heat-shrinkable, radiation cross-linked modified fluoropolymer.

Color: Black

Meltable Insert:

Environmentally resistant modified thermoplastic fluoroelastomer.

Color: Light Blue

### Standards & Specs

Meets TE RT-555 high temperature fluoropolymer fluid specification.

Meets FAR Part 25 appendix F of the FAA standards.

### Application Tooling

A heat gun rated at 2200 watts or greater is recommended.

| Available in: | Americas | Europe | Asia Pacific |
|---|---|---|---|
| | ■ | ■ | ■ |



Catalog 1654025
Revised 3-13

www.te.com

Dimensions are shown for reference purposes only. Specifications subject to change.

Dimensions are in millimeters unless otherwise specified.

USA: +1 800 522 6752
Asia Pacific: +86 0 400 820 6015
UK: +44 800 267 666

For additional support numbers please visit www.te.com

## High Temperature Sealing Sleeves (Continued)

### Product Dimensions

| Part Description | Product Dimensions L Maximum | B Nominal | ØA Minimum |
|---|---|---|---|
| RT-555-3/8-2.75-A260-0 | 69.9 [2.75] | 25.4 [1.00] | 8.3 [0.33] |
| RT-555-3/8-4.75-A260-0 | 120.7 [4.75] | 76.2 [3.00] | 8.4 [0.33] |
| RT-555-1/2-2.75-A260-0 | 69.9 [2.75] | 25.4 [1.00] | 11.4 [0.45] |
| RT-555-1/2-5.75-A260-0 | 146.1 [5.75] | 101.6 [4.00] | 11.4 [0.45] |
| RT-555-3/4-3.00-A260-0 | 76.2 [3.00] | 31.8 [1.25] | 17.7 [0.70] |
| RT-555-3/4-6.75-A260-0 | 171.5 [6.75] | 127.0 [5.00] | 17.7 [0.70] |
| RT-555-1.0-3.75-A260-0 | 95.3 [3.75] | 50.8 [2.00] | 22.8 [0.90] |
| RT-555-1.0-6.75-A260-0 | 171.5 [6.75] | 127.0 [5.00] | 22.8 [0.90] |

Dimensions are mm [inches]

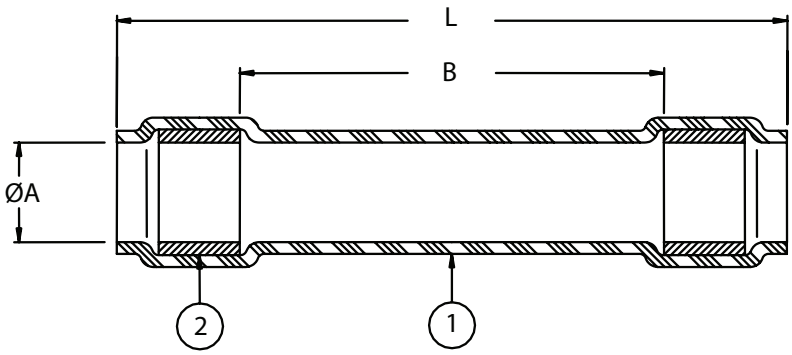


### Ordering Information

Minimum Order Quantity: 200 pieces for all sizes





Catalog 1654025
Revised 3-13

www.te.com

Dimensions are shown for reference purposes only. Specifications subject to change.

Dimensions are in millimeters unless otherwise specified.

USA: +1 800 522 6752
Asia Pacific: +86 0 400 820 6015
UK: +44 800 267 666

For additional support numbers please visit www.te.com

## RT-770

### NBCCS Harness Tubing

### Product Facts

- **Hardened to withstand effect of NBC decontamination agents including DS-2 and STB**
- **Tested in live agent tests with HD, VX and TGD for interior and exterior exposure**
- **Meets the demands of flammability and fluid resistance of current military ground vehicles**
- **Offered with compatible adhesive, wire and other harness components for a survivable system**

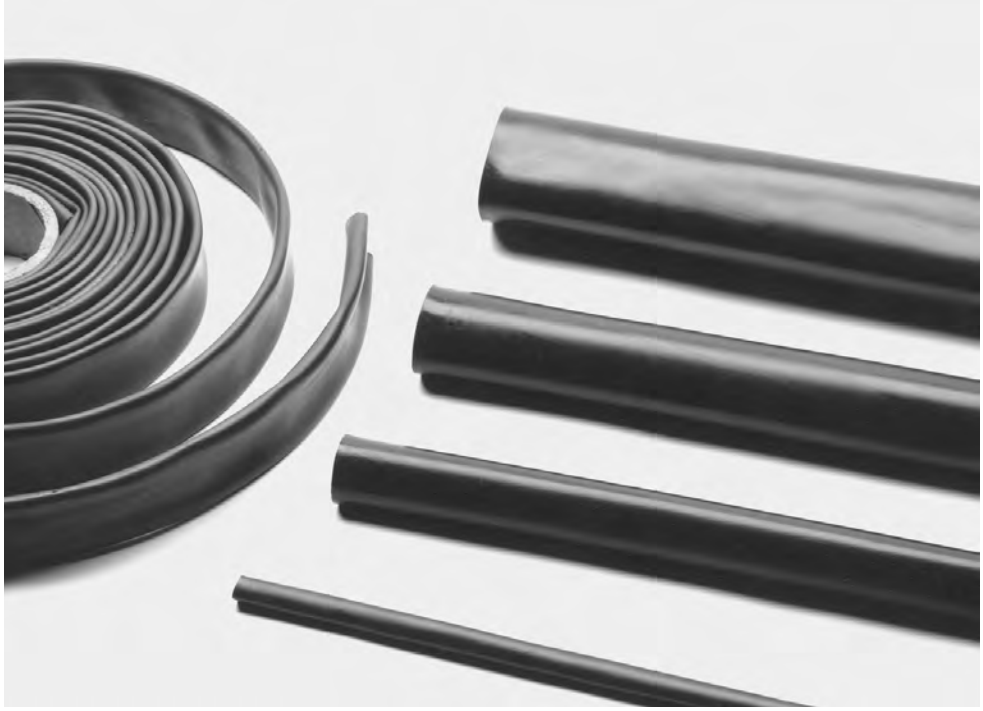

### Applications

RT-770 heat-shrinkable tubing is made of a chemically resistant fluoroelastomer that is suited for use where moisture, fungus and vehicle fluids and fuels are a concern.

Chemical resistance has been tested in accordance with Army TOP 8-2-510 for NBC contamination survivability.

### Installation

Tubing shrinks with temperatures in excess of 150°C

Product is provided with a 2:1 expansion ratio

Optimum application range is 10% above recovered ID to 85% of the expanded ID.

### Operating Temperature Range

-55°C to 125°C
[-67°F to 257°F]

| Available in: | Americas | Europe | Asia Pacific |
|---|---|---|---|
| | ■ | ■ | ■ |



Catalog 1654025
Revised 3-13

www.te.com

Dimensions are shown for reference purposes only. Specifications subject to change.

Dimensions are in millimeters unless otherwise specified.

USA: +1 800 522 6752
Asia Pacific: +86 0 400 820 6015
UK: +44 800 267 666

For additional support numbers please visit www.te.com

## RT-770 (Continued)

### Product Dimensions

| Size | Inside Diameter | | Recovered Wall Thickness | | |
|---|---|---|---|---|---|
| | Minimum Expanded as Supplied | Maximum Recovered After Heating | Minimum | Maximum | Nominal |
| 1/8 | 3.17 [0.125] | 1.57 [0.062] | 0.28 [0.011] | 0.43 [0.017] | 0.35 [0.014] |
| 3/16 | 4.74 [0.187] | 2.36 [0.093] | 0.33 [0.013] | 0.48 [0.019] | 0.41 [0.016] |
| 1/4 | 6.35 [0.250] | 3.17 [0.125] | 0.38 [0.015] | 0.56 [0.022] | 0.46 [0.018] |
| 3/8 | 9.50 [0.375] | 4.74 [0.187] | 0.46 [0.018] | 0.61 [0.024] | 0.51 [0.020] |
| 1/2 | 12.70 [0.500] | 6.35 [0.250] | 0.51 [0.020] | 0.66 [0.026] | 0.56 [0.022] |
| 5/8 | 15.90 [0.625] | 7.93 [0.312] | 0.58 [0.023] | 0.76 [0.030] | 0.66 [0.026] |
| 3/4 | 19.05 [0.750] | 9.50 [0.375] | 0.74 [0.029] | 0.91 [0.036] | 0.81 [0.032] |
| 1 | 25.40 [1.000] | 12.70 [0.500] | 0.86 [0.034] | 1.04 [0.041] | 0.99 [0.037] |
| 1 1/4 | 31.75 [1.250] | 15.87 [0.625] | 0.94 [0.037] | 1.12 [0.044] | 1.01 [0.040] |
| 1 1/2 | 38.10 [1.500] | 19.05 [0.750] | 1.04 [0.041] | 1.22 [0.048] | 1.14 [0.045] |
| 2 | 50.80 [2.000] | 25.40 [1.000] | 1.12 [0.044] | 1.32 [0.052] | 1.22 [0.048] |

### Ordering Information

| | |
|---|---|
| Color | Black (-0) only |
| Size selection | Always order the largest size that will shrink snugly over the component to be covered. Special order sizes are available upon request and are subject to a minimum purchase. |
| Standard packaging | On spools. Quantity varies by size. |
| Ordering description | Specify product name, size and color (for example, RT-770-1/8-0-SP). |

### Part Numbering

| RT-770 | - 1/8 | -0 | -SP |
|---|---|---|---|
| Material | Size | Color | Package |





Catalog 1654025
Revised 3-13

www.te.com

Dimensions are shown for reference purposes only. Specifications subject to change.

Dimensions are in millimeters unless otherwise specified.

USA: +1 800 522 6752
Asia Pacific: +86 0 400 820 6015
UK: +44 800 267 666

For additional support numbers please visit www.te.com

## RT-780

### NBCCS Harness Tubing

### Product Facts

- **Hardened to withstand effect of NBC decontamination agents including DS-2 and STB**
- **Tested in live agent tests with HD, VX and TGD for interior and exterior exposure**
- **Meets the demands of flammability and fluid resistance of current military ground vehicles**
- **Offered with compatible adhesive, wire and other harness components for a survivable system**

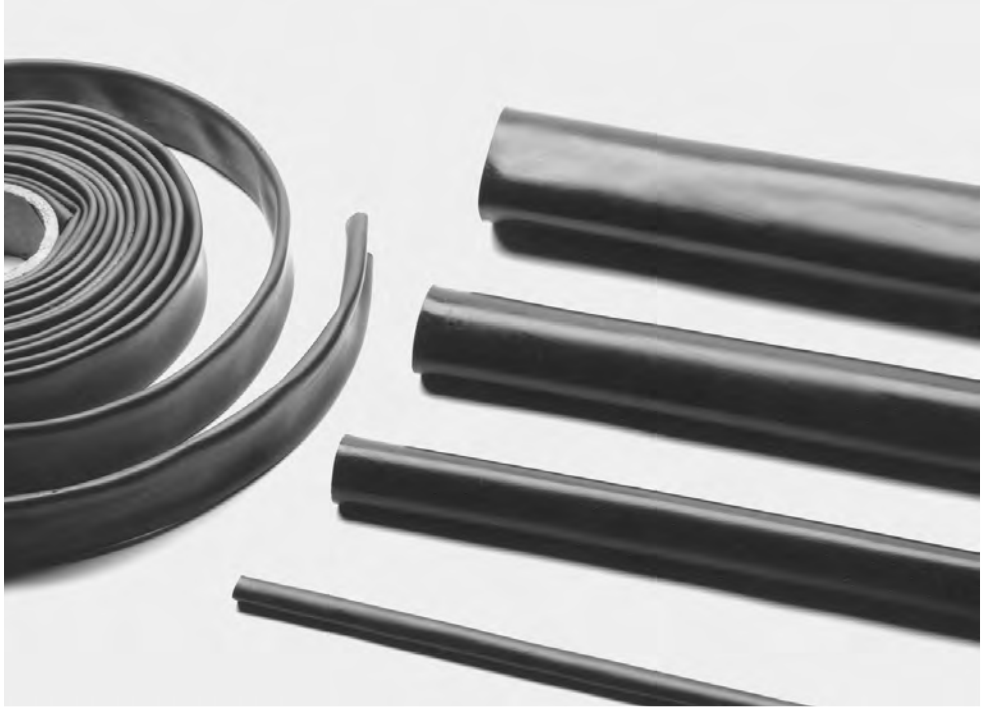

### Applications

RT-780 heat-shrinkable tubing is made of a chemically resistant fluoroelastomer that is suited for use where moisture, fungus and vehicle fluids and fuels are a concern.

Chemical resistance has been tested in accordance with Army TOP 8-2-510 for NBC contamination survivability.

### Installation

Tubing shrinks with temperatures in excess of 200°C

Product is provided with a 2:1 expansion ratio

Optimum application range is 10% above recovered ID to 85% of the expanded ID.

### Operating Temperature Range

-55°C to 175°C
[-67°F to 347°F]

| Available in: | Americas | Europe | Asia Pacific |
|---|---|---|---|
| | ■ | ■ | ■ |



Catalog 1654025
Revised 3-13

www.te.com

Dimensions are shown for reference purposes only. Specifications subject to change.

Dimensions are in millimeters unless otherwise specified.

USA: +1 800 522 6752
Asia Pacific: +86 0 400 820 6015
UK: +44 800 267 666

For additional support numbers please visit www.te.com

## RT-780 (Continued)

### Product Dimensions

| Size | Inside Diameter | | Recovered Wall Thickness | | |
|---|---|---|---|---|---|
| | Minimum Expanded as Supplied | Maximum Recovered After Heating | Minimum | Maximum | Nominal |
| 1/8 | 3.17 [0.125] | 1.57 [0.062] | 0.28 [0.011] | 0.43 [0.017] | 0.35 [0.014] |
| 3/16 | 4.74 [0.187] | 2.36 [0.093] | 0.33 [0.013] | 0.48 [0.019] | 0.41 [0.016] |
| 1/4 | 6.35 [0.250] | 3.17 [0.125] | 0.38 [0.015] | 0.56 [0.022] | 0.46 [0.018] |
| 3/8 | 9.50 [0.375] | 4.74 [0.187] | 0.46 [0.018] | 0.61 [0.024] | 0.51 [0.020] |
| 1/2 | 12.70 [0.500] | 6.35 [0.250] | 0.51 [0.020] | 0.66 [0.026] | 0.56 [0.022] |
| 5/8 | 15.90 [0.625] | 7.93 [0.312] | 0.58 [0.023] | 0.76 [0.030] | 0.66 [0.026] |
| 3/4 | 19.05 [0.750] | 9.50 [0.375] | 0.74 [0.029] | 0.91 [0.036] | 0.81 [0.032] |
| 1 | 25.40 [1.000] | 12.70 [0.500] | 0.86 [0.034] | 1.04 [0.041] | 0.99 [0.037] |
| 1 1/4 | 31.75 [1.250] | 15.87 [0.625] | 0.94 [0.037] | 1.12 [0.044] | 1.01 [0.040] |
| 1 1/2 | 38.10 [1.500] | 19.05 [0.750] | 1.04 [0.041] | 1.22 [0.048] | 1.14 [0.045] |
| 2 | 50.80 [2.000] | 25.40 [1.000] | 1.12 [0.044] | 1.32 [0.052] | 1.22 [0.048] |

### Ordering Information

| | | |
|---|---|---|
| Color | Standard | Black (-0) |
| | Nonstandard | Orange (-3) |
| Size selection | Always order the largest size that will shrink snugly over the component to be covered. Special order sizes are available upon request and are subject to a minimum purchase. | |
| Standard packaging | On spools. Quantity varies by size. | |
| Ordering description | Specify product name, size and color (for example, RT-780-1/8-0-SP). | |

### Part Numbering

| RT-780 | - 1/8 | -0 | -3 | -SP |
|---|---|---|---|---|
| Material | Size | Black | Orange | Package |





Catalog 1654025
Revised 3-13

www.te.com

Dimensions are shown for reference purposes only. Specifications subject to change.

Dimensions are in millimeters unless otherwise specified.

USA: +1 800 522 6752
Asia Pacific: +86 0 400 820 6015
UK: +44 800 267 666

For additional support numbers please visit www.te.com

## RT-790

### NBCCS Harness Tubing

### Product Facts

- **Hardened to withstand effect of NBC decontamination agents including DS-2 and STB**
- **Tested in live agent tests with HD, VX and TGD for interior and exterior exposure**
- **Meets the demands of flammability and fluid resistance of current military ground vehicles**
- **Offered with compatible adhesive, wire and other harness components for a survivable system**

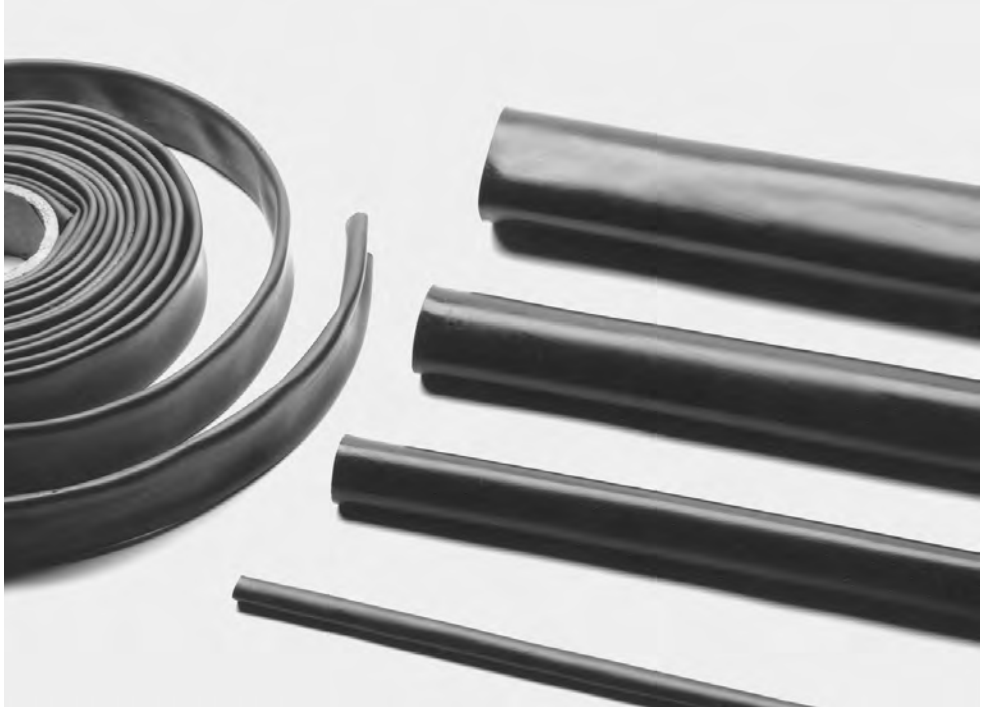

### Applications

RT-790 heat-shrinkable tubing is made of a chemically resistant fluoroelastomer that is suited for use where moisture, fungus and vehicle fluids and fuels are a concern.

Chemical resistance has been tested in accordance with Army TOP 8-2-510 for NBC contamination survivability.

### Installation

Tubing shrinks with temperatures in excess of 250°C

Product is provided with a 2:1 expansion ratio

Optimum application range is 10% above recovered ID to 85% of the expanded ID.

### Operating Temperature Range

-55°C to 200°C
[-67°F to 392°F]

| Available in: | Americas | Europe | Asia Pacific |
|---|---|---|---|
| | ■ | ■ | ■ |



Catalog 1654025
Revised 3-13

www.te.com

Dimensions are shown for reference purposes only. Specifications subject to change.

Dimensions are in millimeters unless otherwise specified.

USA: +1 800 522 6752
Asia Pacific: +86 0 400 820 6015
UK: +44 800 267 666

For additional support numbers please visit www.te.com

## RT-790 (Continued)

### Product Dimensions

| Size | Inside Diameter | | Recovered Wall Thickness | | |
|---|---|---|---|---|---|
| | Minimum Expanded as Supplied | Maximum Recovered After Heating | Minimum | Maximum | Nominal |
| 1/8 | 3.17 [0.125] | 1.57 [0.062] | 0.25 [0.010] | 0.41 [0.016] | 0.30 [0.012] |
| 3/16 | 4.74 [0.187] | 2.36 [0.093] | 0.28 [0.011] | 0.46 [0.018] | 0.36 [0.014] |
| 1/4 | 6.35 [0.250] | 3.17 [0.125] | 0.33 [0.013] | 0.51 [0.020] | 0.41 [0.016] |
| 3/8 | 9.50 [0.375] | 4.74 [0.187] | 0.41 [0.016] | 0.58 [0.023] | 0.48 ]0.019] |
| 1/2 | 12.70 [0.500] | 6.35 [0.250] | 0.41 [0.016] | 0.58 [0.023] | 0.48 [0.019] |
| 5/8 | 15.90 [0.625] | 7.95 [0.313] | 0.48 [0.019] | 0.66 [0.026] | 0.56 [0.022] |
| 3/4 | 19.05 [0.750] | 9.50 [0.375] | 0.61 [0.024] | 0.79 [0.031] | 0.69 [0.027] |
| 1 | 25.40 [1.000] | 12.70 [0.500] | 0.71 [0.028] | 0.89 [0.035] | 0.79 [0.031] |
| 1 1/4 | 31.75 [1.250] | 15.87 [0.625] | 0.76 [0.030] | 0.94 [0.037] | 0.84 [0.033] |
| 1 1/2 | 38.10 [1.500] | 19.05 [0.750] | 0.86 [0.034] | 1.04 [0.041] | 0.94 [0.037] |
| 2 | 50.80 [2.000] | 25.40 [1.000] | 0.94 [0.037] | 1.12 [0.044] | 1.02 [0.040] |

### Ordering Information

| | |
|---|---|
| Color | Black (-0) only |
| Size selection | Always order the largest size that will shrink snugly over the component to be covered. Special order sizes are available upon request and are subject to a minimum purchase. |
| Standard packaging | On spools. Quantity varies by size. |
| Ordering description | Specify product name, size and color (for example, RT-790-1/8-0-SP). |

### Part Numbering

| RT-790 | - 1/8 | -0 | -SP |
|---|---|---|---|
| Material | Size | Color | Package |





Catalog 1654025
Revised 3-13

www.te.com

Dimensions are shown for reference purposes only. Specifications subject to change.

Dimensions are in millimeters unless otherwise specified.

USA: +1 800 522 6752
Asia Pacific: +86 0 400 820 6015
UK: +44 800 267 666

For additional support numbers please visit www.te.com

## RW-175

### High-temperature, Chemical-Resistant, Polyvinylidene Fluoride Tubing

### Product Facts

- 2:1 shrink ratio
- Tough, semirigid, very-thin-wall insulation
- High flame-resistance, meeting the requirements of AMS-DTL-23053*, Test C, with UL and CSA VW-1 rating
- High-temperature performance that meets or exceeds military and industrial standards
- Protection from most industrial solvents, fuels, and chemicals
- Recommended maximum temperature for use as a primary insulator: 135°C [275°F]
- RoHS compliant

### Applications

Especially suitable for applications requiring high-temperature performance, outstanding abrasion resistance and cut-through resistance, or superior chemical and solvent properties. Provides electrical insulation and strain relief of multipin connectors and solder joints. Well-suited for applications that require dense packing of components or visual inspection of covered components.

### Installation

Minimum shrink temperature: 155°C [311°F]

Minimum full recovery temperature: 175°C [347°F]

### Operating Temperature Range

-55°C to 175°C
[-67°F to 347°F]

### Specifications/Approvals

| Series | UL | CSA | Military | Industry | TE |
|---|---|---|---|---|---|
| RW-175 | E35586 VW-1<br>600 V, 150°C | LR31929 VW-1<br>600 V, 150°C | AMS-DTL-23053/8*<br>Def. Stan. 59-97 Type 3<br>VG 95343 Pt 5 Type F<br>BS 3G 198 Pt4 | VDE 0341 Pt 9005 | RW-3029/1<br>RW-3029/2 |

*Formerly MIL-I-23053 and MIL-DTL-23053/8.

| Available in: | Americas | Europe | Asia Pacific |
|---|---|---|---|
| | ■ | ■ | ■ |



Catalog 1654025
Revised 3-13

www.te.com

Dimensions are shown for reference purposes only. Specifications subject to change.

Dimensions are in millimeters unless otherwise specified.

USA: +1 800 522 6752
Asia Pacific: +86 0 400 820 6015
UK: +44 800 267 666

For additional support numbers please visit www.te.com

## RW-175 (Continued)

### Product Dimensions

| Size | Inside Diameter | | Recovered Wall Thickness** |
|---|---|---|---|
| | Minimum Expanded as Supplied | Maximum Recovered After Heating | After Heating |
| 3/64 | 1.2 [0.046] | 0.6 [0.023] | 0.25 ± 0.05 [0.010 ± 0.002] |
| 1/16 | 1.6 [0.063] | 0.8 [0.031] | 0.25 ± 0.05 [0.010 ± 0.002] |
| 3/32 | 2.4 [0.093] | 1.2 [0.046] | 0.25 ± 0.05 [0.010 ± 0.002] |
| 1/8 | 3.2 [0.125] | 1.6 [0.062] | 0.25 ± 0.05 [0.010 ± 0.002] |
| 3/16 | 4.8 [0.187] | 2.4 [0.093] | 0.25 ± 0.05 [0.010 ± 0.002] |
| 1/4 | 6.4 [0.250] | 3.2 [0.125] | 0.33 ± 0.05 [0.013 ± 0.002] |
| 3/8 | 9.5 [0.375] | 4.8 [0.187] | 0.33 ± 0.05 [0.013 ± 0.002] |
| 1/2 | 12.7 [0.500] | 6.4 [0.250] | 0.33 ± 0.05 [0.013 ± 0.002] |
| 3/4 | 19.1 [0.750] | 9.5 [0.375] | 0.43 ± 0.08 [0.017 ± 0.003] |
| 1 | 25.4 [1.000] | 12.7 [0.500] | 0.48 ± 0.08 [0.019 ± 0.003] |
| 1 1/2 | 38.1 [1.500] | 19.1 [0.750] | 0.51 ± 0.08 [0.020 ± 0.003] |

**Wall thickness will be less if tubing recovery is restricted during shrinkage.

### Ordering Information

| | | |
|---|---|---|
| Color | Standard | Clear (-X) |
| | Nonstandard | Black (-0) |
| Size selection | Always order the largest size that will shrink snugly over the component to be covered. Special order sizes are available upon request. | |
| Standard packaging | In 1.2-meter [4-foot] lengths. | |
| Ordering description*** | Specify product name, size and color (for example, RW-175 3/64-X). | |

***Europe only. For supply to MIL spec., Def Stan and BS add -MS, -DS or -BS to ordering description.





Catalog 1654025
Revised 3-13

www.te.com

Dimensions are shown for reference purposes only. Specifications subject to change.

Dimensions are in millimeters unless otherwise specified.

USA: +1 800 522 6752
Asia Pacific: +86 0 400 820 6015
UK: +44 800 267 666

For additional support numbers please visit www.te.com

## RW-200/RW-200E

### Heat-Shrinkable, Chemical-Resistant, High-Temperature Tubing

### Product Facts

- **High resistance to impact and abrasion**
- **Resistance to a wide variety of fuels, lubricants, acids, and solvents at elevated temperatures**
- **Flexibility at low temperatures without cracking**
- **RoHS compliant**

### Applications

Raychem brand premium heat-shrinkable tubing is fabricated from modified, crosslinked fluroelastomeric materials designed for a wide range of applications. It is available in two configurations. RW-200-E is the heavy wall version. RW-200 meets the requirements of 23053/13.

Offering fluid resistance, RW-200 tubing can be used in applications up to 200°C [392°F].

### Installation

Minimum shrink temperature: 100°C [212°F]

Minimum full recovery temperature: 175°C [347°F]

### Operating Temperature Range

RW-200: -40°C* to 200°C [-40°F to 392°F]

RW-200-E: -55°C to 200°C [-67°F to 392°F]

### Specifications/Approvals

| Series | Military | TE |
|---|---|---|
| RW-200 | AMS-DTL 23053/13* | RW-3037 |
| RW-200-E | Def. Stan. 59-97 Issue 3 Type 4A<br>VG 95343 Part 5 Type E<br>VDE 0341/Pt9005<br>BS 4G-198 Part 3 12A | RW-3037 |

*Formerly MIL-I-23053/13 and MIL-DTL-23053/13.

| Available in: | Americas | Europe | Asia Pacific |
|---|---|---|---|
| | ■ | ■ | ■ |



Catalog 1654025
Revised 3-13

www.te.com

Dimensions are shown for reference purposes only. Specifications subject to change.

Dimensions are in millimeters unless otherwise specified.

USA: +1 800 522 6752
Asia Pacific: +86 0 400 820 6015
UK: +44 800 267 666

For additional support numbers please visit www.te.com

## RW-200/RW-200E (Continued)

### Product Dimensions

| MIL Spec No. | Size | Inside Diameter: Minimum Expanded as Supplied | Inside Diameter: Maximum Recovered After Heating | Recovered Wall Thickness** After Heating (Nominal): RW-200-E | Recovered Wall Thickness** After Heating (Nominal): RW-200 |
|---|---|---|---|---|---|
| -012 | 1/8 | 3.2 [0.125] | 1.6 [0.062] | 0.76 [0.030] | 0.76 [0.030] |
| -001 | 3/16 | 4.8 [0.187] | 2.4 [0.093] | 0.84 [0.033] | 0.89 [0.035] |
| -002 | 1/4 | 6.4 [0.250] | 3.2 [0.125] | 0.89 [0.035] | 0.89 [0.035] |
| -003 | 3/8 | 9.5 [0.375] | 4.8 [0.187] | 1.02 [0.040] | 0.89 [0.035] |
| -004 | 1/2 | 12.7 [0.500] | 6.4 [0.250] | 1.22 [0.048] | 0.89 [0.035] |
| -005 | 5/8 | 15.9 [0.625] | 7.9 [0.312] | — | 1.07 [0.042] |
| -006 | 3/4 | 19.1 [0.750] | 9.5 [0.375] | 1.45 [0.057] | 1.07 [0.042] |
| -007 | 7/8 | 22.2 [0.875] | 11.1 [0.437] | — | 1.25 [0.049] |
| -008 | 1 | 25.4 [1.000] | 12.7 [0.500] | 1.78 [0.070] | 1.25 [0.049] |
| -009 | 1 1/4 | 31.8 [1.250] | 15.9 [0.625] | — | 1.40 [0.055] |
| -010 | 1 1/2 | 38.1 [1.500] | 19.1 [0.750] | 2.41 [0.095] | 1.40 [0.055] |
| -011 | 2 | 50.8 [2.000] | 25.4 [1.000] | 2.79 [0.110] | 1.65 [0.065] |

**Wall thickness will be less if tubing recovery is restricted during shrinkage.

### Ordering Information

| | |
|---|---|
| Color | Standard Black (-0) |
| Size selection | Always order the largest size that will shrink snugly over the component to be covered. Special order sizes are available upon request. |
| Standard packaging | On spools. |
| Ordering description*** | Specify product name, size and color (for example, RW-200 1/4-0-SP). |

***Europe only. For supply to MIL, Def Stan and BS add -MS, -DS or -BS to ordering description.





Catalog 1654025
Revised 3-13

www.te.com

Dimensions are shown for reference purposes only. Specifications subject to change.

Dimensions are in millimeters unless otherwise specified.

USA: +1 800 522 6752
Asia Pacific: +86 0 400 820 6015
UK: +44 800 267 666

For additional support numbers please visit www.te.com

## SCL

### Semirigid, Encapsulant-Lined, Polyolefin Tubing

### Product Facts

- 3:1 shrink ratio
- Splash-resistant, moisture-resistant covering; not intended for use where immersion in fluids is required
- Rugged protection against abrasion, vibration, and flexing
- Excellent strain relief and insulation of weak points
- RoHS compliant

### Applications

Encapsulates components, splices, and terminations where moisture resistance and mechanical protection are required. Encapsulant melts and flows to fill surface irregularities of the substrate. While still hot, the tubing can be blocked to form a wire breakout.

### Installation

Minimum shrink temperature: 125°C [257°F]

Minimum full recovery temperature: 135°C [275°F]

### Operating Temperature Range

-55°C to 110°C
[-67°F to 230°F]

### Specifications/Approvals

| Series | UL | Military | TE |
|---|---|---|---|
| SCL | E85381<br>600 V, 125°C | AMS-DTL-23053/4*, Class 1 | RT-1301 |

*Formerly MIL-I-23053/4 and MIL-DTL-23053/4.

| Available in: | Americas | Europe | Asia Pacific |
|---|---|---|---|
| | ■ | ■ | ■ |



Catalog 1654025
Revised 3-13

www.te.com

Dimensions are shown for reference purposes only. Specifications subject to change.

Dimensions are in millimeters unless otherwise specified.

USA: +1 800 522 6752
Asia Pacific: +86 0 400 820 6015
UK: +44 800 267 666

For additional support numbers please visit www.te.com

## SCL (Continued)

### Product Dimensions

| Size | Additional Standard Color | Inside Diameter | | Recovered Wall Thickness** | |
|---|---|---|---|---|---|
| | | Minimum Expanded as Supplied | Maximum Recovered After Heating | Total Wall After Heating | Meltable Wall After Heating (Nominal) |
| 1/8 | Brown | 3.2 [0.125] | 0.6 [0.023] | 0.96 ± 0.15 [0.038 ± 0.006] | 0.51 [0.020] |
| 3/16 | Gray | 4.8 [0.187] | 1.5 [0.060] | 1.09 ± 0.15 [0.043 ± 0.006] | 0.64 [0.025] |
| 1/4 | White | 6.4 [0.250] | 2.0 [0.080] | 1.19 ± 0.15 [0.047 ± 0.006] | 0.69 [0.027] |
| 3/8 | Red | 9.5 [0.375] | 3.4 [0.135] | 1.27 ± 0.18 [0.050 ± 0.007] | 0.76 [0.030] |
| 1/2 | Blue | 12.7 [0.500] | 5.0 [0.195] | 1.39 ± 0.18 [0.055 ± 0.007] | 0.89 [0.035] |
| 3/4 | Yellow | 19.1 [0.750] | 8.0 [0.313] | 1.65 ± 0.18 [0.065 ± 0.007] | 1.02 [0.040] |
| 1 | N/A | 25.4 [1.000] | 10.2 [0.400] | 1.90 ± 0.18 [0.075 ± 0.007] | 1.02 [0.040] |

**Wall thickness will be less if tubing recovery is restricted during shrinkage.



### Ordering Information

| | | |
|---|---|---|
| Color | Standard | Black (-0) for all sizes, plus one additional color per size per Product Dimensions table. |
| Size selection | Always order the largest size that will shrink snugly over the component to be covered. Special order sizes are available upon request. | |
| Standard packaging | In 1.2-meter [4-foot] lengths. | |
| Ordering description*** | Specify product name, size and color (for example, SCL 1/4-0). | |

***Europe only. For supply to MIL spec., Def Stan and BS add -MS, -DS or -BS to ordering description.



Dimensions are shown for reference purposes only. Specifications subject to change.

Dimensions are in millimeters unless otherwise specified.

USA: +1 800 522 6752
Asia Pacific: +86 0 400 820 6015
UK: +44 800 267 666

For additional support numbers please visit www.te.com

## SCT

### Flame-Retardant, Adhesive-Lined, Semirigid Polyolefin Tubing (Extended Temperature Range)

### Product Facts

- **4:1 shrink ratio allows a few sizes to cover a wide range of splice and component diameters**
- **Flame-retardant and mechanically tough, the tubing provides strain relief and abrasion protection of wire splices, terminals, and other components**
- **Thick adhesive liner forms an effective barrier against fluids and moisture and performs well at an extended temperature range**
- **RoHS compliant**

### Applications

Specially designed to insulate and seal automotive wire splices and components in an under-the-hood automotive environment. Specially formulated to function at an extended temperature range.

### Installation

Minimum shrink temperature: 110°C [230°F]

Minimum full recovery temperature: 135°C [266°F]

### Operating Temperature Range

-40°C to 150°C
[-40°F to 302°F]

### Specifications/Approvals

| Series | TE |
|---|---|
| SCT | SCT SCD |

| Available in: | Americas | Europe | Asia Pacific |
|---|---|---|---|
| | ■ | ■ | ■ |



Catalog 1654025
Revised 3-13

www.te.com

Dimensions are shown for reference purposes only. Specifications subject to change.

Dimensions are in millimeters unless otherwise specified.

USA: +1 800 522 6752
Asia Pacific: +86 0 400 820 6015
UK: +44 800 267 666

For additional support numbers please visit www.te.com

## SCT (Continued)

### Product Dimensions

| Part Number | Inside Diameter | | Recovered Wall Thickness* | |
|---|---|---|---|---|
| | Minimum Expanded as Supplied | Maximum Recovered After Heating | Total Wall After Heating | Meltable Wall After Heating (Nominal) |
| SCT No. 1 | 7.6 [0.300] | 1.7 [0.065] | 1.52 ± 0.30 [0.060 ± 0 .012] | 0.76 [0.030] |
| SCT No. 2 | 9.0 [0.355] | 2.3 [0.090] | 1.52 ± 0.30 [0.060 ± 0 .012] | 0.76 [0.030] |
| SCT No. 3 | 11.6 [0.455] | 2.5 [0.100] | 2.29 ± 0.30 [0.090 ± 0.012] | 1.40 [0.055] |
| SCT No. 4 | 17.8 [0.700] | 4.4 [0.175] | 2.54 ± 0.30 [0.100 ± 0.012] | 1.52 [0.060] |

*Wall thickness will be less if tubing recovery is restricted during shrinkage.



### Ordering Information

| | |
|---|---|
| Color | Black |
| Size selection | Always order the largest size that will shrink snugly over the component being covered. Special order sizes are available upon request. |
| Standard packaging | Cut pieces. |
| Marking | Tubing will be printed with its numbered size (such as SCT-1, SCT-2, SCT-3, SCT-4). |
| Ordering description | Specify product name, numbered size, color and cut length (for example, SCT-NO.3-0-75MM). |

## SFR

### Very Flexible, Flame-Retardant, Silicone Elastomer Tubing

### Product Facts

- Outstanding low-temperature flexibility
- Resistance to hydraulic fluids, fuel, and lubricating oil
- Very good ablative characteristics: when exposed to flame, surface turns to insulative char or "ablates"
- RoHS compliant

### Applications

Provides cable jacketing, harness protection, and strain relief for electronic components, semi-conductor leads, and wire splices. Suitable for applications that require flexibility over a wide range of operating temperatures.

### Installation

Minimum shrink temperature: 135°C [285°F]

Minimum full recovery temperature: 175°C [347°F]

### Operating Temperature Range

-75°C to 180°C
[-103°F to 356°F]

### Specifications/Approvals

| Series | Military | TE |
|---|---|---|
| SFR | AMS-DTL-23053/10* | RT-1140 |

*Formerly MIL-I-23053/10 and MIL-DTL-23053/10.

| Available in: | Americas | Europe | Asia Pacific |
|---|---|---|---|
| | ■ | ■ | ■ |



Catalog 1654025
Revised 3-13

www.te.com

Dimensions are shown for reference purposes only. Specifications subject to change.

Dimensions are in millimeters unless otherwise specified.

USA: +1 800 522 6752
Asia Pacific: +86 0 400 820 6015
UK: +44 800 267 666

For additional support numbers please visit www.te.com

## SFR (Continued)

### Product Dimensions

| Size | Inside Diameter | | Recovered Wall Thickness** |
|---|---|---|---|
| | Minimum Expanded as Supplied | Maximum Recovered After Heating | After Heating |
| 1/4 | 6.4 [0.250] | 3.6 [0.143] | 0.88 ± 0.25 [0.035 ± 0.010] |
| 3/8 | 9.5 [0.375] | 5.4 [0.214] | 1.02 ± 0.25 [0.040 ± 0.010] |
| 1/2 | 12.7 [0.500] | 7.3 [0.286] | 1.21 ± 0.38 [0.048 ± 0.015] |
| 5/8 | 15.9 [0.625] | 9.1 [0.357] | 1.32 ± 0.38 [0.052 ± 0.015] |
| 3/4 | 19.1 [0.750] | 10.9 [0.428] | 1.44 ± 0.38 [0.057 ± 0.015] |
| 7/8 | 22.2 [0.875] | 12.7 [0.500] | 1.65 ± 0.38 [0.065 ± 0.015] |
| 1 | 25.4 [1.000] | 14.5 [0.570] | 1.77 ± 0.51 [0.070 ± 0.020] |
| 1 1/4 | 31.8 [1.250] | 18.1 [0.714] | 2.21 ± 0.51 [0.087 ± 0.020] |
| 1 1/2 | 38.1 [1.500] | 21.8 [0.857] | 2.41 ± 0.51 [0.095 ± 0.020] |
| 1 3/4 | 44.5 [1.750] | 25.4 [1.000] | 2.71 ± 0.51 [0.107 ± 0.020] |
| 2 | 50.8 [2.000] | 29.0 [1.140] | 2.79 ± 0.51 [0.110 ± 0.020] |

**Wall thickness will be less if tubing recovery is restricted during shrinkage.

### Ordering Information

| | | |
|---|---|---|
| Color | Standard | Black (-0) |
| Size selection | Always order the largest size that will shrink snugly over the component to be covered. Special order sizes are available upon request. | |
| Standard packaging | On spools. | |
| Ordering description*** | Specify product name, size and color (for example, SFR 1/4-0-SP). | |

***Europe only. For supply to MIL spec., Def Stan and BS add -MS, -DS or -BS to ordering description.





Catalog 1654025
Revised 3-13

www.te.com

Dimensions are shown for reference purposes only. Specifications subject to change.

Dimensions are in millimeters unless otherwise specified.

USA: +1 800 522 6752
Asia Pacific: +86 0 400 820 6015
UK: +44 800 267 666

For additional support numbers please visit www.te.com

## SRFR

### Highly Flexible, Silicone Rubber Tubing

### Product Facts

- **Highly flame-retardant**
- **Extremely flexible at high and low temperatures**
- **Shrink ratio 1.5:1 minimum except sizes 4/2.9 and 29/20**
- **RoHS compliant**

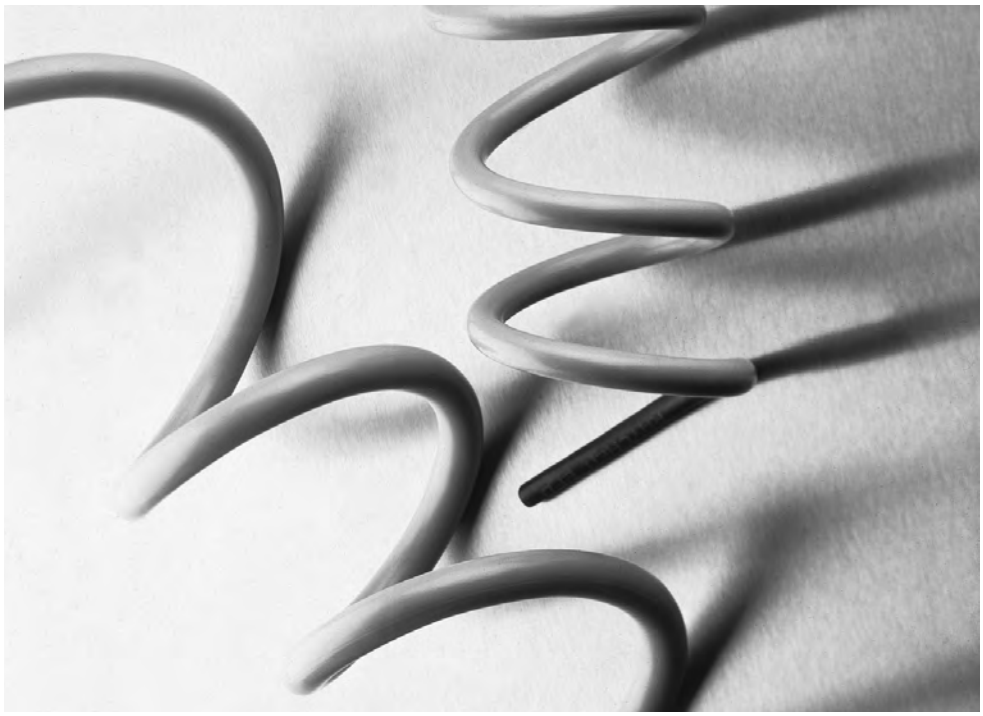

### Applications

Highly flexible and resistant to high and low temperatures. Unlike other silicone materials, SRFR displays outstanding physical strength. It resists extreme heat shocks, and exhibits good thermal insulation. SRFR is non-burning and has outstanding ablative properties as well as excellent physical and electrical properties. SRFR is used in medical equipment where its key properties are outstanding flexibility and ability to withstand exposure to sterilization conditions. Other applications include thyristor power cable insulation, heating element and bus bar insulation, fiber optic bundle sheathing, and rocketry support cable protection.

### Installation

Minimum shrink temperature: 135°C [275°F]

Minimum full recovery temperature: 175°C [347°F]

### Operating Temperature Range

-75°C to 200°C
[-103°F to 392°F]

### Specifications/Approvals

| Series | UL | TE |
|---|---|---|
| SRFR | E85381 VW-1<br>600V, 200°C | RW-2057 |

| Available in: | Americas | Europe | Asia Pacific |
|---|---|---|---|
| | ■ | ■ | ■ |



Catalog 1654025
Revised 3-13

www.te.com

Dimensions are shown for reference purposes only. Specifications subject to change.

Dimensions are in millimeters unless otherwise specified.

USA: +1 800 522 6752
Asia Pacific: +86 0 400 820 6015
UK: +44 800 267 666

For additional support numbers please visit www.te.com

## SRFR (Continued)

### Product Dimensions

| Size | Inside Diameter | | Recovered Wall Thickness* |
|---|---|---|---|
| | Minimum Expanded as Supplied | Maximum Recovered After Heating | After Heating |
| 2.9/1.7 | 2.9 [0.114] | 1.7 [0.067] | 1.0 ± 0.50 [0.039 ± 0.020] |
| 4/2.9 | 4.0 [0.158] | 2.9 [0.114] | 1.0 ± 0.50 [0.039 ± 0.020] |
| 7.8/4.6 | 7.8 [0.307] | 4.6 [0.181] | 1.0 ± 0.50 [0.039 ± 0.020] |
| 10/6.5 | 10.0 [0.394] | 6.5 [0.256] | 1.5 ± 0.50 [0.059 ± 0.020] |
| 15/9.6 | 15.0 [0.591] | 9.6 [0.378] | 1.5 ± 0.50 [0.059 ± 0.020] |
| 21/13 | 21.0 [0.827] | 13.0 [0.512] | 2.0 ± 0.75 [0.079 ± 0.030] |
| 29/20 | 29.0 [1.142] | 20.0 [0.787] | 2.0 ± 0.75 [0.079 ± 0.030] |
| 41/27 | 41.0 [1.614] | 27.0 [1.063] | 3.0 ± 1.00 [0.118 ± 0.039] |
| 51/33 | 51.0 [2.008] | 33.0 [1.299] | 3.0 ± 1.00 [0.118 ± 0.039] |

*Wall thickness will be less if tubing recovery is restricted during shrinkage.

### Ordering Information

| | | |
|---|---|---|
| Color | Standard | Gray (-8) |
| Size selection | Always order the largest size that will shrink snugly over the component to be covered. | |
| Standard packaging | On spools. | |
| Ordering description | Specify product name, size and color (for example, SRFR 2.9/1.7-8-SP). | |





Catalog 1654025
Revised 3-13

www.te.com

Dimensions are shown for reference purposes only. Specifications subject to change.

Dimensions are in millimeters unless otherwise specified.

USA: +1 800 522 6752
Asia Pacific: +86 0 400 820 6015
UK: +44 800 267 666

For additional support numbers please visit www.te.com

## SST/SST-FR

### Self-Sealing, Heat-Shrinkable Tubing

### Product Facts

- Thick adhesive liner forms an effective barrier against fluids and moisture
- Thick-wall insulation, strain relief and abrasion protection
- No need for greases, tape, or epoxy
- Expansion ratios as high as 3:1
- Available in flame-retardant material
- SST has the following agency approvals:
  - ABS (American Bureau of Shipping)
  - Lloyd's (Lloyd's Register of Shipping)
- RoHS compliant

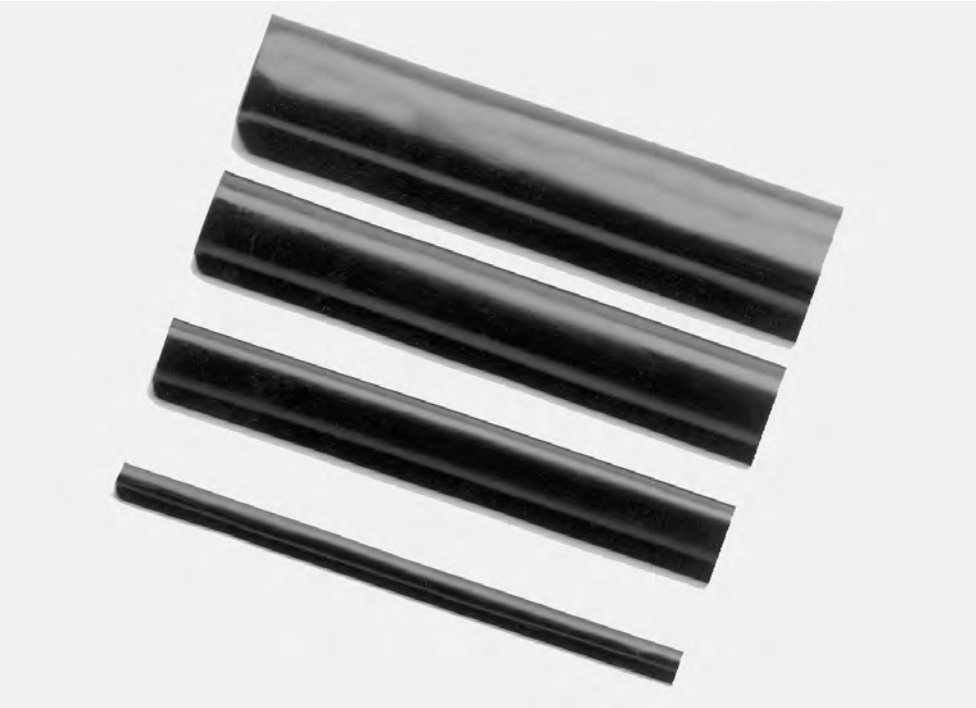

### Applications

SST provides a simple, positive splice-sealing method that offers protection under adverse environmental conditions. Tubing supplied with standard sealant provides water sealing and environmental protection in wet or underground applications. The thermoplastic adhesive not only seals, but also provides mechanical strain relief. The polymer tubing has excellent insulating, abrasion-resistance, and strain-relief properties.

### Installation

Minimum shrink temperature: 90°C [195°F]

Minimum full recovery temperature: 121°C [250°F]

### Operating Temperature Range

-55°C to 110°C
[-67°F to 230°F]

### Specifications/Approvals

| Series | Military | Industry | Agency | TE |
|---|---|---|---|---|
| SST | — | — | | RW-2011 |
| SST-FR | AMS-DTL-23053/15*, Classes 1 and 2 | ASTM D 685, nonburning | ABS, Lloyd's | RW-2011 |

*Formerly MIL-I-23053/I5 and MIL-DTL-23053/15.

| Available in: | Americas | Europe | Asia Pacific |
|---|---|---|---|
| | ■ | ■ | ■ |



Catalog 1654025
Revised 3-13

www.te.com

Dimensions are shown for reference purposes only. Specifications subject to change.

Dimensions are in millimeters unless otherwise specified.

USA: +1 800 522 6752
Asia Pacific: +86 0 400 820 6015
UK: +44 800 267 666

For additional support numbers please visit www.te.com

## SST/SST-FR (Continued)

### Product Dimensions

| Size† | Standard Nominal Length | Inside Diameter: Minimum Expanded as Supplied | Inside Diameter: Maximum Recovered After Heating | Wall Thickness: Expanded | Wall Thickness: Nominal Wall After Heating†† | Recommended Cable Range for 600-Volt Cable |
|---|---|---|---|---|---|---|
| SST*-03 | 30**, 48 | 0.300 | 0.100 | 0.025 | 0.070 | 18 through 14 AWG |
| SST*-04 | 30**, 48 | 0.400 | 0.150 | 0.025 | 0.070 | 14 through 10 AWG |
| SST*-07 | 48 | 0.750 | 0.220 | 0.030 | 0.095 | 8 through 1 AWG |
| SST*-11 | 48 | 1.100 | 0.375 | 0.040 | 0.120 | 2 through 4/0 AWG |
| SST*-13 | 48 | 1.300 | 0.375 | 0.035 | 0.120 | 2 through 4/0 AWG |
| SST*-15 | 48 | 1.500 | 0.500 | 0.050 | 0.140 | 2/0 AWG through 500 MCM |
| SST*-17 | 48 | 1.700 | 0.500 | 0.045 | 0.140 | 2/0 AWG through 500 MCM |
| SST*-20 | 48 | 2.000 | 0.750 | 0.050 | 0.160 | 350 MCM through 1000 MCM |
| SST*-27 | 48 | 2.700 | 0.900 | 0.050 | 0.160 | 500 MCM through 1250 MCM |
| SST*-30 | 48 | 3.000 | 1.250 | 0.050 | 0.160 | 900 MCM through 1500 MCM |
| SST*-40 | 48 | 4.000 | 1.750 | 0.050 | 0.160 | 1500 MCM through 2500 MCM |
| SST*-45 | 48 | 4.500 | 1.750 | 0.050 | 0.160 | 1500 MCM through 2500 MCM |

†In place of asterisk* substitute length of tubing to be ordered. For example, SST*-11, as the second column indicates, comes in 48-inch lengths, so a 48-inch cut piece of SST tubing would be SST 48-11.
††Wall thickness will be less if tubing recovery is restricted during shrinkage.
**30-inch length standard for /226 coating only.

### Ordering Information

| | | |
|---|---|---|
| Color | Standard | Black |
| | Nonstandard | White, Red, Yellow and Clear (Clear is non-flame-retardant) |
| Size selection | Always order the largest size that will shrink snugly over the component to be covered. Special order sizes are available upon request. | |
| Standard packaging | See Product Dimensions table. | |
| Ordering description | Specify product name, cut length, size and color (for example, SST 48-07/FR/97). | |

### Part Numbering System

**SST - _ - _ / _ / _ / _ / _**

- **"NM"** - no marking
- **Color**
  Black/leave blank (standard)
  White/WHT
  Red/RED
  Yellow/YLW
  Clear/CL (non-flame retardant)
- **Adhesive/sealant**
  /97 standard with FR
  /226 standard with Non FR
- **"FR"** - flame-retardant
- **Size**
- **Length** in inches (48 inch max)
- **Family**

**Example: SST-48-07/FR/97/NM**





Catalog 1654025
Revised 3-13

www.te.com

Dimensions are shown for reference purposes only. Specifications subject to change.

Dimensions are in millimeters unless otherwise specified.

USA: +1 800 522 6752
Asia Pacific: +86 0 400 820 6015
UK: +44 800 267 666

For additional support numbers please visit www.te.com

## TAT-125

### Adhesive-Lined, Flexible, Polyolefin Tubing

### Product Facts

- 2:1 shrink ratio
- Thin adhesive lining that bonds to outer tubing and surface below, forming a positive environmental seal
- Flexibility of both tubing and adhesive
- Moisture seal that is resistant to bending of the substrate
- Good mechanical strength and cut-through resistance
- Adhesive that bonds to a wide variety of plastics, rubbers, and metals, including polyethylene, neoprene, lead, and steel
- RoHS compliant

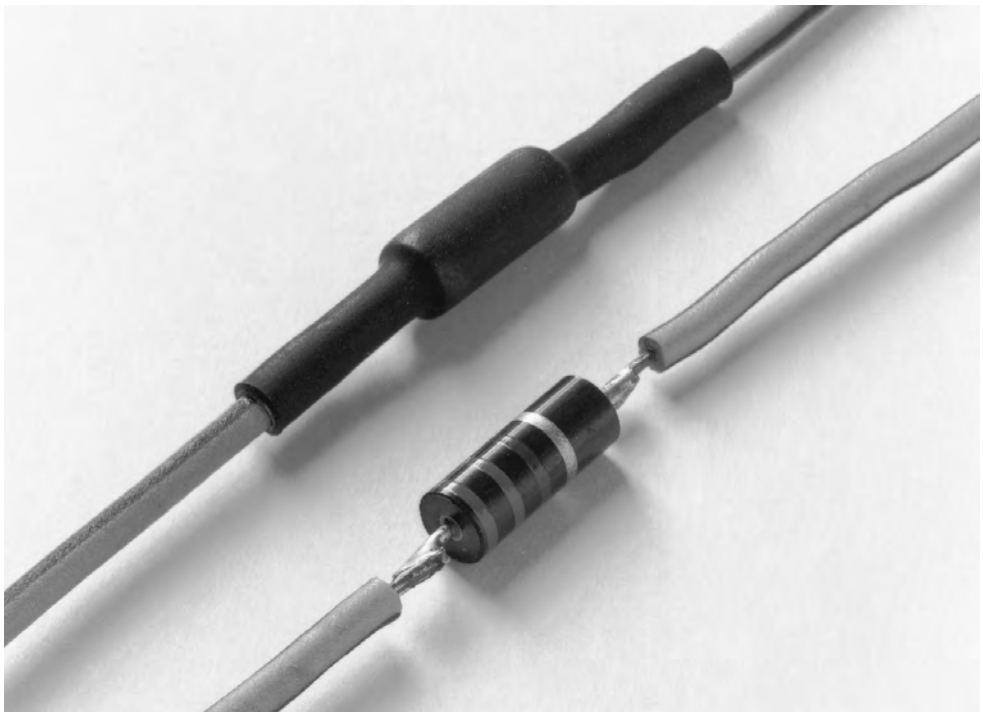

### Applications

Seals and protects simple in-line splices, bimetallic joints, and components from fluids, moisture, and corrosion. Repairs damaged wire insulation, especially where flexibility is required. Provides one-step electrical insulation and moisture sealing.

### Installation

Minimum shrink temperature: 95°C [203°F]

Minimum full recovery temperature: 121°C [250°F]

### Operating Temperature Range

-55°C to 110°C
[-67°F to 230°F]

### Specifications/Approvals

| Series | UL* | Military | TE |
|---|---|---|---|
| TAT-125 Type 1 (colors) | E85381<br>600 V, 125°C | AMS-DTL-23053/4*, Class 2 | RW-3032 |
| TAT-125 Type 2 (clear) | — | — | RW-3032 |

*Formerly MIL-I-23053/4 and MIL-DTL-23053/4. Sizes 1/4" through 1 1/2" only.

| Available in: | Americas | Europe | Asia Pacific |
|---|---|---|---|
| | ■ | | ■ |



Catalog 1654025
Revised 3-13

www.te.com

Dimensions are shown for reference purposes only. Specifications subject to change.

Dimensions are in millimeters unless otherwise specified.

USA: +1 800 522 6752
Asia Pacific: +86 0 400 820 6015
UK: +44 800 267 666

For additional support numbers please visit www.te.com

## TAT-125 (Continued)

### Product Dimensions

| Size | Inside Diameter | | Recovered Wall Thickness** | |
|---|---|---|---|---|
| | Minimum Expanded as Supplied | Maximum Recovered After Heating | Total Wall After Heating (Nominal) | Adhesive Wall After Heating (Nominal) |
| 1/8 | 3.2 [0.125] | 1.6 [0.062] | 0.69 [0.027] | 0.23 [0.009] |
| 3/16 | 4.8 [0.187] | 2.4 [0.093] | 0.71 [0.028] | 0.25 [0.010] |
| 1/4 | 6.4 [0.250] | 3.2 [0.125] | 0.74 [0.029] | 0.13 [0.005] |
| 3/8 | 9.5 [0.375] | 4.8 [0.187] | 0.74 [0.029] | 0.13 [0.005] |
| 1/2 | 12.7 [0.500] | 6.4 [0.250] | 0.76 [0.030] | 0.15 [0.006] |
| 3/4 | 19.1 [0.750] | 9.5 [0.375] | 0.89 [0.035] | 0.15 [0.006] |
| 1 | 25.4 [1.000] | 12.7 [0.500] | 1.07 [0.042] | 0.20 [0.008] |
| 1 1/2 | 38.1 [1.500] | 19.1 [0.750] | 1.19 [0.047] | 0.28 [0.011] |

**Wall thickness will be less if tubing recovery is restricted during shrinkage.

### Ordering Information

| | | |
|---|---|---|
| Color | Standard | Black (-0) |
| | Nonstandard | White (-9), red (-2), blue (-6), yellow (-4), green (-5), brown (-1), orange (-3), violet (-7), gray (-8), clear (-X , not flame-retardant) |
| Size selection | Always order the largest size that will shrink snugly over the component to be covered. Special order sizes are available upon request. | |
| Standard packaging | In 1.2-meter [4-foot] lengths. | |
| Ordering description | Specify product name, size and color (for example, TAT-125 1/4-0). | |





Catalog 1654025
Revised 3-13

www.te.com

Dimensions are shown for reference purposes only. Specifications subject to change.

Dimensions are in millimeters unless otherwise specified.

USA: +1 800 522 6752
Asia Pacific: +86 0 400 820 6015
UK: +44 800 267 666

For additional support numbers please visit www.te.com

## TC Caps

### Semirigid, Flame-Retardant Polyolefin Caps

### Product Facts

- 2.5:1 shrink ratio
- Flame-retardant
- Permanent or temporary method to terminate wires
- Rapid, simple installation
- Rugged protection against abrasion, vibration, and flexing
- RoHS compliant

### Applications

Widely used for wire terminations because of their light weight, small size and durability. Vibration-proof caps are used to insulate and terminate dead-end electrical cables, fixtures, connectors, and other electrical equipment. Also used to protect the ends of wire during storage.

### Installation

Minimum shrink temperature: 110°C [230°F]

Minimum full recovery temperature: 135°C [275°F]

### Operating Temperature Range

-55°C to 135°C
[-67°F to 275°F]

### Specifications/Approvals

| Series | UL | TE |
|---|---|---|
| TC Caps | E85381<br>600 V, 125°C | TC Caps SCD |

| Available in: | Americas | Europe | Asia Pacific |
|---|---|---|---|
| | ■ | ■ | ■ |



Catalog 1654025
Revised 3-13

www.te.com

Dimensions are shown for reference purposes only. Specifications subject to change.

Dimensions are in millimeters unless otherwise specified.

USA: +1 800 522 6752
Asia Pacific: +86 0 400 820 6015
UK: +44 800 267 666

For additional support numbers please visit www.te.com

## TC Caps (Continued)

### Product Dimensions

| Size | Color | Length | | Inside Diameter | | Recovered Wall Thickness** After Heating |
|---|---|---|---|---|---|---|
| | | Nominal Overall as Supplied | Minimum Open Barrel after Recovery* | Minimum Expanded as Supplied | Maximum Recovered After Heating | |
| TC 4001 | White (-9) | 19.1 (0.750) | 10.2 (0.400) | 1.6 (0.063) | 0.8 (0.030) | 0.51 ± 0.12 (0.020 ± 0.005) |
| TC 4003 | Red (-2) | 25.4 (1.000) | 14.0 (0.550) | 3.2 (0.125) | 1.3 (0.050) | 0.64 ± 0.12 (0.025 ± 0.005) |
| TC 4005 | Gray (-8) | 28.6 (1.125) | 14.0 (0.550) | 6.4 (0.250) | 2.5 (0.100) | 0.69 ± 0.12 (0.027 ± 0.005) |

*See glossary for definition of “barrel”.
**Wall thickness will be less if tubing recovery is restricted during shrinkage.

### Ordering Information

| | | |
|---|---|---|
| Color | Standard | One color per size per the Product Dimensions table. |
| Size selection | Always order the largest size that will shrink snugly over the component to be covered. | |
| Standard packaging | In pieces. | |
| Ordering description | Specify product name, size and color (for example, TC-CAPS-4003-2). | |





Catalog 1654025
Revised 3-13

www.te.com

Dimensions are shown for reference purposes only. Specifications subject to change.

Dimensions are in millimeters unless otherwise specified.

USA: +1 800 522 6752
Asia Pacific: +86 0 400 820 6015
UK: +44 800 267 666

For additional support numbers please visit www.te.com

## TFE and TFE-R

### High-Temperature, Chemically Inert, Modified Tubing made with PTFE® Fluoropolymer

### Product Facts

- Shrink ratio: 1.8:1 (TFE)
  3.2:1 (TFE-R)
- High flame-resistance
- Excellent chemical resistance
- RoHS compliant

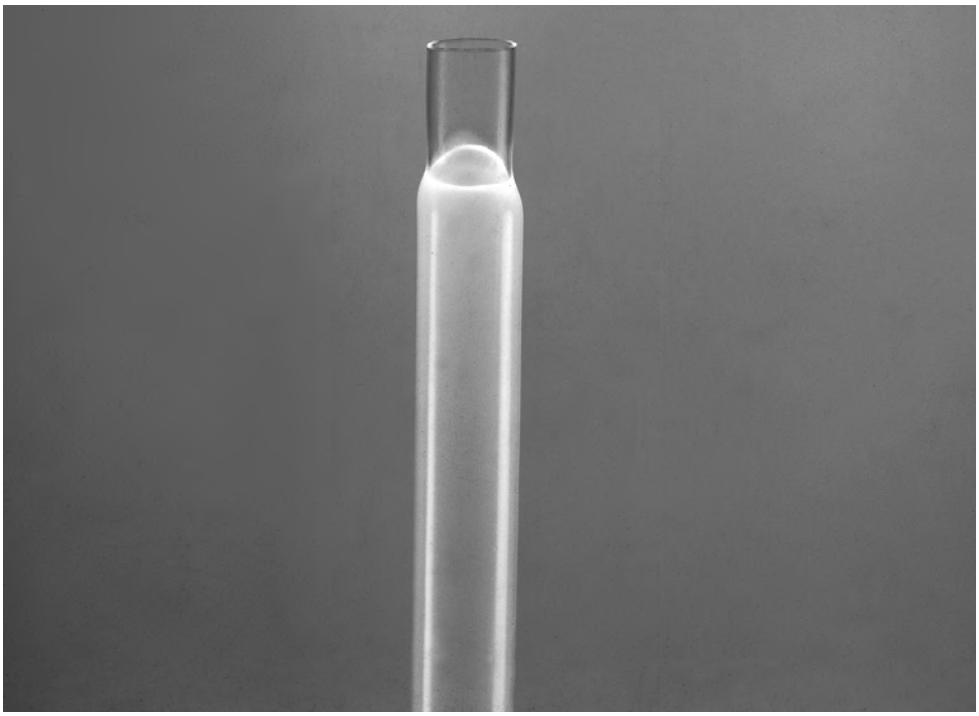

### Applications

Designed to provide insulation and mechanical protection in severe chemical and thermal environments. Used to cover hydraulic hose and couplings to prevent contamination and corrosion. The high mechanical strength and extremely low coefficient of friction make it good for reducing damage to bearing shafts and similar applications.

### Installation

Minimum shrink temperature: 330°C [625°F]

Minimum full recovery temperature: 340°C [644°F]

### Operating Temperature Range

-67°C to 250°C
[-88.6°F to 482°F]

### Specifications/Approvals

| Series | Military | TE |
|---|---|---|
| TFE, TFE-R | AMS-DTL-23053/12*, Classes 3 and 5<br>Def. Stan. 59-97 Type 5A (TFE)<br>Def. Stan. 59-97 Type 5B (TFE-R) | RW-2055 (TFE)<br>RW-2054 (TFE-R) |

*Formerly MIL-I-23053/12 and MIL-DTL-23053/12.

| Available in: | Americas | Europe | Asia Pacific |
|---|---|---|---|
| | | ■ | ■ |

PTFE is a trademark of E. I. du Pont de Nemours and Company.



Catalog 1654025
Revised 3-13

www.te.com

Dimensions are shown for reference purposes only. Specifications subject to change.

Dimensions are in millimeters unless otherwise specified.

USA: +1 800 522 6752
Asia Pacific: +86 0 400 820 6015
UK: +44 800 267 666

For additional support numbers please visit www.te.com

## TFE and TFE-R (Continued)

### Product Dimensions

#### TFE

| Size | Inside Diameter | | Wall Thickness** |
|---|---|---|---|
| | Minimum Expanded as Supplied | Maximum Recovered After Heating | Nominal Recovered After Heating |
| 30 | 0.8 [0.032] | 0.38 [0.015] | 0.23 [0.009] |
| 28 | 0.9 [0.035] | 0.46 [0.018] | 0.23 [0.009] |
| 26 | 1.1 [0.043] | 0.56 [0.022] | 0.25 [0.010] |
| 24 | 1.2 [0.047] | 0.68 [0.027] | 0.25 [0.010] |
| 22 | 1.4 [0.055] | 0.81 [0.032] | 0.30 [0.012] |
| 20 | 1.5 [0.059] | 0.99 [0.039] | 0.30 [0.012] |
| 18 | 1.9 [0.075] | 1.24 [0.049] | 0.30 [0.012] |
| 16 | 2.3 [0.091] | 1.55 [0.061] | 0.30 [0.012] |
| 14 | 3.0 [0.118] | 1.83 [0.072] | 0.30 [0.012] |
| 12 | 3.8 [0.150] | 2.26 [0.089] | 0.30 [0.012] |
| 10 | 4.8 [0.189] | 2.84 [0.112] | 0.30 [0.012] |
| 8 | 6.1 [0.240] | 3.58 [0.141] | 0.38 [0.015] |
| 6 | 7.6 [0.299] | 4.52 [0.178] | 0.38 [0.015] |
| 4 | 9.4 [0.370] | 5.69 [0.224] | 0.38 [0.015] |
| 2 | 10.9 [0.429] | 7.06 [0.278] | 0.38 [0.015] |
| 0 | 11.9 [0.469] | 8.81 [0.347] | 0.38 [0.015] |

**Wall thickness will be less if tubing recovery is restricted during shrinkage.

#### TFE-R

| Size | Inside Diameter | | Wall Thickness** |
|---|---|---|---|
| | Minimum Expanded as Supplied | Maximum Recovered After Heating | Nominal Recovered After Heating |
| 5/64 | 2.0 [0.079] | 0.6 [0.024] | 0.23 [0.009] |
| 1/8 | 3.2 [0.126] | 1.0 [0.039] | 0.25 [0.010] |
| 1/4 | 6.4 [0.252] | 1.6 [0.063] | 0.30 [0.012] |
| 3/8 | 9.5 [0.374] | 2.4 [0.095] | 0.30 [0.012] |
| 1/2 | 12.7 [0.500] | 3.7 [0.146] | 0.38 [0.015] |
| 5/8 | 15.9 [0.626] | 4.5 [0.177] | 0.38 [0.015] |
| 3/4 | 19.0 [0.748] | 5.7 [0.224] | 0.38 [0.015] |
| 1 | 25.4 [1.000] | 7.1 [0.230] | 0.38 [0.015] |
| 1-1/4 | 32.0 [1.260] | 8.8 [0.347] | 0.38 [0.015] |

**Wall thickness will be less if tubing recovery is restricted during shrinkage.

### Ordering Information

| | |
|---|---|
| Color | Standard Clear (-X) |
| Size selection | Always order the largest size that will shrink snugly over the component to be covered. Special order sizes are available upon request. |
| Standard packaging | In 1.2-meter [4-foot] lengths. |
| Ordering description*** | Specify product name, size and color (for example,TFE 22-X). |

***Europe only. For supply to MIL spec., Def Stan and BS add -MS, -DS or -BS to ordering description.





Catalog 1654025
Revised 3-13

www.te.com

Dimensions are shown for reference purposes only. Specifications subject to change.

Dimensions are in millimeters unless otherwise specified.

USA: +1 800 522 6752
Asia Pacific: +86 0 400 820 6015
UK: +44 800 267 666

For additional support numbers please visit www.te.com

## Tubing Kits and Mini-Spools

### Smaller Packaging Options for Single Wall and Adhesive-Lined Tubing Products

### Product Facts

- **VERSAFIT and RNF-100 tubing: 2:1 shrink ratio**
- **DWP-125: 3:1 shrink ratio**
- **ES1000: 4:1 shrink ratio**
- **VERSAFIT tubing's low full recovery temperature reduces installation time and the risk of damage to temperature-sensitive components**
- **RNF-100 offers excellent physical, chemical, and electrical properties that meet or exceed commercial, industrial and military standards for highly reliable, general purpose tubing**
- **DWP-125 and ES1000 have high-shrink-ratios to allow for insulation and sealing of irregular shapes; few sizes cover a wide range of diameters**
- **RoHS compliant**

### Applications

Single wall VERSAFIT and RNF-100 tubing provide electrical insulation and strain relief of in-line components, electrical connections, wire terminations, and splices. They can be used to bundle wires for flexible light duty harnesses. Also to identify or color code wires, cables, terminals and electronic components.

Adhesive-lined DWP-125 and ES1000 environmentally seal and protect a wide variety of electrical applications, including wire splices, terminations, break-outs and connector-to-cable transitions.

### Installation

Minimum full recovery temperature:

VERSAFIT: 90°C [194°F]

RNF-100: 121°C [250°F]

DWP-125: 125°C [257°F]

ES1000: 135°C [275°F]

### Operating Temperature Range

VERSAFIT and RNF-100:
-55°C to 135°C
[-67°F to 275°F]

DWP-125:
-40°C to 110°C
[-40°F to 230°F]

ES1000:
-40°C to 130°C
[-40°F to 266°F]

### Specifications/Approvals

| Series | UL | CSA | Military | TE |
|---|---|---|---|---|
| VERSAFIT | E35586 VW-1<br>600 V, 125°C | LR31929 VW-1<br>600 V, 125°C | AMS-DTL-23053/5*,<br>Classes 1 & 3 | RW-3009 |
| RNF-100 | E35586<br>600 V, 125°C | LR31929<br>600 V, 125°C | AMS-DTL-23053/5*,<br>Class 1 | RT-350 |
| DWP-125 | E35586<br>600 V, 125°C | — | — | DWP-125 SCD |
| ES1000 | E85381<br>600 V, 125°C | — | — | RT-1113 |

*Formerly MIL-I-23053/5 and MIL-DTL-23053/5.

| Available in: | Americas | Europe | Asia Pacific |
|---|---|---|---|
| | ■ | | ■ |



Catalog 1654025
Revised 3-13

www.te.com

Dimensions are shown for reference purposes only. Specifications subject to change.

Dimensions are in millimeters unless otherwise specified.

USA: +1 800 522 6752
Asia Pacific: +86 0 400 820 6015
UK: +44 800 267 666

For additional support numbers please visit www.te.com

## Tubing Kits and Mini-Spools (Continued)

### Single Wall Tubing

**KIT 1 – 2 to 1 Shrink Ratio • Black • 600V, 125°C, UL/CSA VW-1**

**(KIT 1 PN: A55251-000)**

| Expanded I.D. | Quantity (6 Inch Pieces) | Fits Wire Gauge Size | Refill Part Number |
|---|---|---|---|
| VERSAFIT-3/16” | 30 | 18 – 14 AWG | D76139-000 |
| VERSAFIT-1/4” | 28 | 12 – 10 AWG | F37063-000 |
| VERSAFIT-3/8” | 24 | 8 AWG | D27573-000 |
| VERSAFIT-1/2” | 20 | 6 –3 AWG | C02462-000 |
| VERSAFIT-3/4” | 14 | 2 – 1/0 AWG | A92664-000 |
| VERSAFIT-1” | 10 | 2/0 – 4/0 AWG | C21270-000 |

**KIT 2 – 2 to 1 Shrink Ratio • 7 Colors** • 600V, 125°C, UL/CSA VW-1 (except clear)**

**(KIT 2 PN: D54859-000)**

| Expanded I.D. | Quantity (6 Inch Pieces) | Fits Wire Gauge Size | Refill Part Number |
|---|---|---|---|
| VERSAFIT-3/32” | 35 | 18 AWG | E31091-000 |
| VERSAFIT-1/8” | 28 | 16 AWG | 349256-000 |
| VERSAFIT-3/16” | 21 | 14 AWG | C53800-000 |
| VERSAFIT-1/4” | 21 | 12 – 10 AWG | C87605-000 |
| VERSAFIT-3/8” | 14 | 8 AWG | A82691-000 |
| VERSAFIT-1/2” | 14 | 6 – 3 AWG | E10896-000 |

### Adhesive-Lined Tubing

**KIT 3 – Black/White/Red/Clear • 600V, 125°C, UL (KIT 3 PN: E42160-000)**

| Expanded I.D. | Quantity (6 Inch Pieces) | Fits Wire Gauge Size | | Refill Part Number |
|---|---|---|---|---|
| DWP-125-1/8” | 25 | 20 – 16 AWG | (3 to 1 Shrink Ratio) | D14889-000 |
| DWP-125-3/16” | 25 | 14 –10 AWG | (3 to 1 Shrink Ratio) | E87367-000 |
| DWP-125-1/4” | 24 | 12 –10 AWG | (3 to 1 Shrink Ratio) | F91864-000 |
| DWP-125-1/2” | 10 | 6 –3 AWG | (3 to 1 Shrink Ratio) | F41454-000 |
| DWP-125-3/4” | 5 | 2 – 1/0 AWG | (3 to 1 Shrink Ratio) | C67617-000 |
| DWP-125-1” | 3 | 2/0 – 4/0 AWG | (3 to 1 Shrink Ratio) | F66623-000 |
| ES1000-NO.1 | 6 | 16 – 12 AWG | (4 to 1 Shrink Ratio) | |
| ES1000-NO.2 | 5 | 12 – 10 AWG | (4 to 1 Shrink Ratio) | |
| ES1000-NO.3 | 5 | 10 – 8 AWG | (4 to 1 Shrink Ratio) | |
| ES1000-NO.4 | 3 | 6 –3 AWG | (4 to 1 Shrink Ratio) | |

KITS 1, 2 and 3 are comprised of a durable six section plastic box with hinged lid. Inside the lid are product selection guidelines. Ask your Sales Representative about KIT 4 and KIT 6, our Economy Tubing Kits in a reclosable plastic bag, also used on “point of sale” racks. Here are Part Numbers for those Kits and their content:
KIT 4: E32151-000 (Three pieces each of 3/16”, 1/4”, 3/8”, 1/2”, 3/4” and 1” Black tubing in 6 inch pieces)
KIT 6: C72402-000 (Three pieces each of 3/64”, 1/16”, 3/32” and 1/8” Black tubing in 6 inch pieces)

### VERSAFIT MINI-SPOOLS

**2 to 1 Shrink Ratio • Black • 600V, 125°C, UL/CSA VW-1**

| Expanded I.D. | Quantity (Feet) | Part Number |
|---|---|---|
| VERSAFIT-3/64” | 100 | C16404-000 |
| VERSAFIT-1/16” | 75 | E40870-000 |
| VERSAFIT-3/32 | 65 | D70981-000 |
| VERSAFIT-1/8” | 60 | C17600-000 |
| VERSAFIT-3/16” | 50 | F27135-000 |
| VERSAFIT-1/4” | 40 | F64479-000 |
| VERSAFIT-3/8” | 35 | D57591-000 |
| VERSAFIT-1/2” | 30 | E37316-000 |
| VERSAFIT-3/4” | 25 | 449582-000 |
| VERSAFIT-1” | 15 | F27156-000 |

VERSAFIT is a very flexible, highly flame-retardant polyolefin tubing, 90°C full recovery temperature, good fluid resistance with a UL 224/CSA VW-1 flammability rating.

### RNF-100 MINI-SPOOLS

**2 to 1 Shrink Ratio • Black • 600V, 125°C, UL/CSA**

| Expanded I.D. | Quantity (Feet) | Part Number |
|---|---|---|
| RNF-100-3/64” | 100 | D00409-000 |
| RNF-100-1/16” | 75 | A66551-000 |
| RNF-100-3/32 | 65 | D42391-000 |
| RNF-100-1/8” | 60 | F56629-000 |
| RNF-100-3/16” | 50 | E77288-000 |
| RNF-100-1/4” | 40 | F75818-000 |
| RNF-100-3/8” | 35 | D12330-000 |
| RNF-100-1/2” | 30 | A81736-000 |
| RNF-100-3/4” | 25 | E40866-000 |
| RNF-100-1” | 15 | E62131-000 |

RNF-100 is a flexible, flame-retardant polyolefin tubing, 121°C full recovery temperature, excellent fluid resistance with a UL 224/CSA All Tubing flammability rating.





Catalog 1654025
Revised 3-13

www.te.com

Dimensions are shown for reference purposes only. Specifications subject to change.

Dimensions are in millimeters unless otherwise specified.

USA: +1 800 522 6752
Asia Pacific: +86 0 400 820 6015
UK: +44 800 267 666

For additional support numbers please visit www.te.com

## URHT

### Ultra-High-Ratio, Flame-Retardant, Polyolefin Heat-Shrinkable Tubing

### Product Facts

- Shrink ratios as high as 8:1
- Specially formulated for thick wall insulation, strain relief and abrasion protection
- Flame retardant passing ASTM D 635
- Excellent performance in both hot and cold environments
- Optional factory applied adhesive provides watertight environmental sealing in wet and corrosive locations
- RoHS compliant

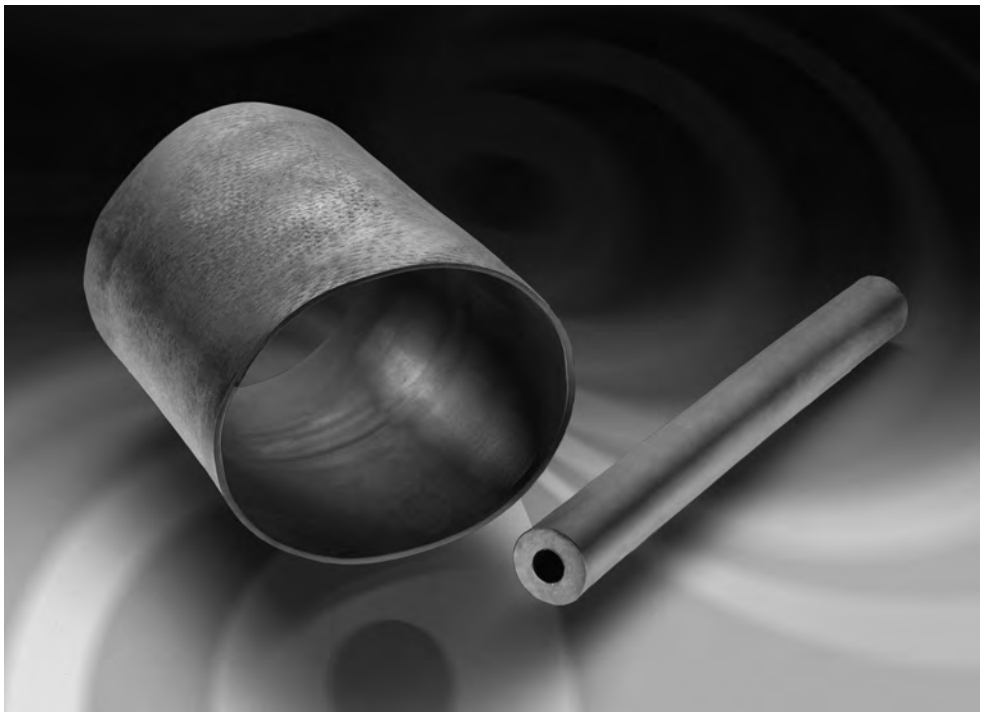

### Applications

Ultra-high-shrink-ratio, heat-shrinkable tubing, with expansion ratios as high as 8-to-1, is designed to conform to odd shapes and shrink over large transitions, allowing for the repair and sealing of cable connectors and equipment. Cable harnesses can be repaired and released without disassembly. This product can be used to seal the back end of a connector or simply repair a damaged outer insulation of a cable or wire.

URHT tubing is available with or without a hot melt adhesive lining.

### Installation

Minimum shrink temperature: 135°C [275°F]

Minimum full recovery temperature: 150°C [302°F]

### Operating Temperature Range

-55°C to 135°C
[-67°F to 275°F]

### Specifications/Approvals

| Series | Military | TE |
|---|---|---|
| URHT | SAE-AS81765/1, Type II* | URHT SCD |

*heat-shrinkable, crosslinked, flexible polyolefin

| Available in: | Americas | Europe | Asia Pacific |
|---|---|---|---|
| | ■ | ■ | ■ |



Catalog 1654025
Revised 3-13

www.te.com

Dimensions are shown for reference purposes only. Specifications subject to change.

Dimensions are in millimeters unless otherwise specified.

USA: +1 800 522 6752
Asia Pacific: +86 0 400 820 6015
UK: +44 800 267 666

For additional support numbers please visit www.te.com

## URHT (Continued)

### Product Dimensions

| Size | Inside Diameter | | Wall Thickness | |
|---|---|---|---|---|
| | Minimum Expanded as Supplied | Maximum Recovered After Heating | Nominal Recovered After Heating | Unrestricted Full Recovered Length ± 6.35 (.250) |
| URHT-200 | 50.80 (2.000) | 5.84 (0.230) | 3.56 (0.140) | 7.62, 101.60, 152.40, 254.00 (3, 4, 6, 10) |
| URHT-300 | 76.20 (3.000) | 8.64 (0.340) | 3.56 (0.140) | 7.62, 101.60, 152.40, 254.00 (3, 4, 6, 10) |



### Ordering Information

| | | |
|---|---|---|
| Color | Standard | Black (-0) |
| Size selection | Always order the largest size that will shrink snugly over the component to be covered. | |
| Standard packaging | In pieces. | |
| Ordering description | Specify product name, size, cut length and color (for example, URHT-200-10-0). | |

### Part Numbering System

**URHT - _ / _ / _**

- 42 = Std Adhesive
  86 = High Performance Adhesive
- Unrestricted recovered length
- Expanded inside diameter - as supplied



Catalog 1654025
Revised 3-13

www.te.com

Dimensions are shown for reference purposes only. Specifications subject to change.

Dimensions are in millimeters unless otherwise specified.

USA: +1 800 522 6752
Asia Pacific: +86 0 400 820 6015
UK: +44 800 267 666

For additional support numbers please visit www.te.com

## Versafit

### Highly Flame-Retardant, Very Flexible, Low-Shrink-Temperature, Polyolefin Tubing

### Product Facts

- 2:1 shrink ratio
- Low shrink temperature reduces installation time and the risk of damage to temperature-sensitive components
- Very flexible; doesn't easily wrinkle when bent
- Highly flame-retardant
- Hot stamps extremely well
- Higher temperature rating, better thermal stability, and higher resistance to physical abuse than noncrosslinked materials
- Free of polybrominated biphenyls (PBBs) and polybrominated biphenyl oxides and ethers (PBBOs and PBBEs), which are classified as environmentally hazardous substances
- RoHS compliant

### Applications

Cost-effective choice for many commercial and military applications; electrically insulates and protects in-line components, disconnect terminals, and splices. Bundles wires for very flexible light-duty harnesses. Strain-relieves electrical wire connections for commercial applications. Identifies or color-codes wires, cables, terminals, and components.

### Installation

Minimum shrink temperature: 70°C [158°F]

Minimum full recovery temperature: 90°C [194°F]

### Operating Temperature Range

-55°C to 135°C
[-67°F to 275°F]

### Specifications/Approvals

| Series | UL | CSA | Military | TE |
|---|---|---|---|---|
| Versafit | E35586 VW-1<br>600 V, 125°C | LR31929 VW-1<br>600 V, 125°C | AMS-DTL-23053/5*<br>Classes 1 & 3 | RW-3009 |

*Formerly MIL-I-23053/5 and MIL-DTL-23053/5.

| Available in: | Americas | Europe | Asia Pacific |
|---|---|---|---|
| | ■ | ■ | ■ |



Catalog 1654025
Revised 3-13

www.te.com

Dimensions are shown for reference purposes only. Specifications subject to change.

Dimensions are in millimeters unless otherwise specified.

USA: +1 800 522 6752
Asia Pacific: +86 0 400 820 6015
UK: +44 800 267 666

For additional support numbers please visit www.te.com

## Versafit (Continued)

### Product Dimensions

| Size | Inside Diameter | | Recovered Wall Thickness** |
|---|---|---|---|
| | Expanded as Supplied | Maximum Recovered After Heating | After Heating |
| 3/64 | 1.63 ± 0.2 [0.064 ± 0.008] | 0.6 [0.023] | 0.40 ± 0.08 [0.016 ± 0.003] |
| 1/16 | 1.85 ± 0.2 [0.073 ± 0.008] | 0.8 [0.031] | 0.43 ± 0.08 [0.017 ± 0.003] |
| 3/32 | 2.79 ± 0.2 [0.110 ± 0.008] | 1.2 [0.046] | 0.51 ± 0.08 [0.020 ± 0.003] |
| 1/8 | 3.43 ± 0.2 [0.135 ± 0.008] | 1.6 [0.062] | 0.51 ± 0.08 [0.020 ± 0.003] |
| 3/16 | 5.21 ± 0.3 [0.205 ± 0.010] | 2.4 [0.093] | 0.51 ± 0.08 [0.020 ± 0.003] |
| 1/4 | 7.11 ± 0.3 [0.280 ± 0.010] | 3.2 [0.125] | 0.64 ± 0.08 [0.025 ± 0.003] |
| 3/8 | 10.16 ± 0.4 [0.400 ± 0.015] | 4.8 [0.187] | 0.64 ± 0.08 [0.025 ± 0.003] |
| 1/2 | 13.72 ± 0.4 [0.540 ± 0.015] | 6.4 [0.250] | 0.64 ± 0.08 [0.025 ± 0.003] |
| 5/8*** | 16.90 ± 0.4 [0.665 ± 0.015] | 8.0 [0.315] | 0.76 ± 0.08 [0.030 ± 0.003] |
| 3/4 | 20.45 ± 0.4 [0.805 ± 0.015] | 9.5 [0.375] | 0.76 ± 0.08 [0.030 ± 0.003] |
| 1 | 25.53 ± 0.4 [1.055 ± 0.015] | 12.7 [0.500] | 0.89 ± 0.12 [0.035 ± 0.005] |
| 1 1/4*** | 33.40 ± 0.7 [1.315 ± 0.025] | 15.9 [0.625] | 1.02 ± 0.15 [0.040 ± 0.006] |
| 1 1/2 | 39.88 ± 0.8 [1.570 ± 0.030] | 19.1 [0.750] | 1.02 ± 0.15 [0.040 ± 0.006] |
| 2 | 52.83 ± 1.0 [2.080 ± 0.040] | 25.4 [1.000] | 1.14 ± 0.16 [0.045 ± 0.007] |
| 3 | 78.49 ± 1.0 [3.090 ± 0.040] | 38.1 [1.500] | 1.27 ± 0.20 [0.050 ± 0.008] |
| 4 | 104.14 ± 1.3 [4.100 ± 0.050] | 50.8 [2.000] | 1.40 ± 0.23 [0.055 ± 0.009] |

**Wall thickness will be less if tubing recovery is restricted during shrinkage.
***Nonstandard size; available by special order only.

### Ordering Information

| | | |
|---|---|---|
| Color | Standard | Black (-0), white (-9), red (-2), blue (-6), yellow (-4), green (-5), sizes 3/64 through 1-inch only) |
| | Nonstandard | Brown (-1), orange (-3), violet (-7), gray (-8) |
| Size selection | Always order the largest size that will shrink snugly over the component to be covered. Special order sizes are available upon request. | |
| Standard packaging**** | On spools. | |
| Ordering description***** | Specify product name, size and color (for example, Versafit 1/4-0). | |

****Available in the convenient Mini-Spool packaging/dispensing system, for sizes 3/64” up to 1”.
*****Europe only. For supply to MIL, Def Stan and BS add -MS, -DS or -BS to ordering description.





Catalog 1654025
Revised 3-13

www.te.com

Dimensions are shown for reference purposes only. Specifications subject to change.

Dimensions are in millimeters unless otherwise specified.

USA: +1 800 522 6752
Asia Pacific: +86 0 400 820 6015
UK: +44 800 267 666

For additional support numbers please visit www.te.com

## Versaflex

### Expandable, Braided, Polyester Sleeving

### Product Facts

- Excellent abrasion and cut-through resistance
- Lightweight
- Flexible (even at low temperatures)
- Fungus proof
- Not affected by most chemical and solvents, non-hygroscopic
- Versaflex-FR sleeving meets UL VW-1 and is self-extinguishing
- Wide range of sizes available
- RoHS compliant

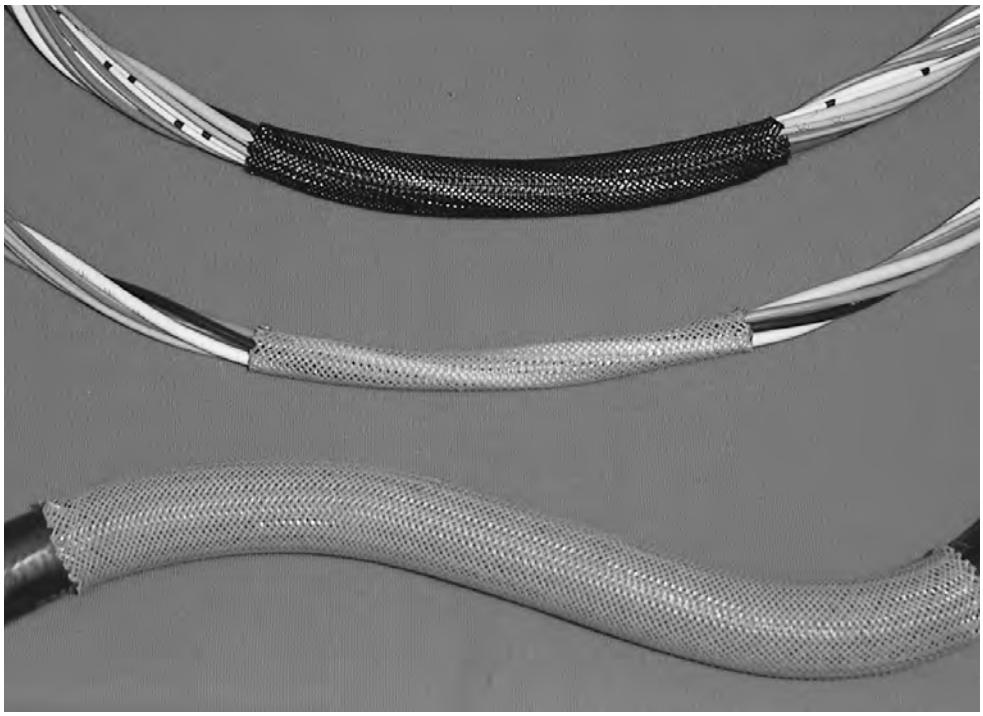

### Applications

Versaflex sleeving is suited for the mechanical protection of wire harnesses, hoses, and all other applications where exceptional flexibility combined with superior abrasion/cut resistance is required. It also serves as an economical means for wire bundling that will not trap heat or moisture; expanding easily to fit over irregular shapes, then contracting to conform and grip. To prevent fraying, these products should be cut to length using a hot knife.

### Installation

This product is cold applied.

### Operating Temperature Range

-50°C to 150°C
[-58°F to 302°F]

(220°C [-58°F to 302°F] for short periods)

### Specifications/Approvals

| Series | UL | TE |
|---|---|---|
| Versaflex-FR | E306976 VW-1, 125°C | |
| Versaflex | — | RK-6772 |

| Available in: | Americas | Europe | Asia Pacific |
|---|---|---|---|
| | | ■ | ■ |



Catalog 1654025
Revised 3-13

www.te.com

Dimensions are shown for reference purposes only. Specifications subject to change.

Dimensions are in millimeters unless otherwise specified.

USA: +1 800 522 6752
Asia Pacific: +86 0 400 820 6015
UK: +44 800 267 666

For additional support numbers please visit www.te.com

## Versaflex (Continued)

### Product Dimensions

| Versaflex (metric) | | |
|---|---|---|
| Nominal Size | Size Range | |
| | Minimum | Maximum |
| 3 (0.118) | 1 (0.039) | 5 (0.197) |
| 4 (0.158) | 2 (0.079) | 7 (0.276) |
| 5 (0.197) | 3 (0.118) | 9 (0.354) |
| 6 (0.236) | 4 (0.158) | 12 (0.472) |
| 8 (0.315) | 5 (0.197) | 12 (0.472) |
| 10 (0.394) | 7 (0.276) | 15 (0.591) |
| 12 (0.472) | 8 (0.315) | 17 (0.669) |
| 15 (0.591) | 10 (0.394) | 20 (0.787) |
| 20 (0.787) | 14 (0.551) | 26 (1.024) |
| 25 (0.984) | 18 (0.709) | 34 (1.339) |
| 30 (1.181) | 20 (0.787) | 40 (1.575) |
| 40 (1.575) | 30 (1.181) | 50 (1.969) |
| 50 (1.969) | 40 (1.575) | 60 (2.362) |

| Versaflex (Imperial) | | |
|---|---|---|
| Size | Nominal Size | Size Range |
| 1/8 | 3 (0.118) | 2.4 – 6.4 (0.094 – 0.252) |
| 1/4 | 6 (0.236) | 3.2 – 9.5 (0.125 – 0.375) |
| 3/8 | 10 (0.394) | 4.7 – 16 (0.185 – 0.630) |
| 1/2 | 13 (0.512) | 6.4 – 19 (0.252 – 0.748) |
| 3/4 | 19 (0.748) | 13 – 32 (0.512 – 1.260) |
| 1-1/4 | 32 (1.256) | 19 – 45 (0.748 – 1.772) |
| 1-3/4 | 45 (1.772) | 32 – 70 (1.260 – 2.756) |
| 2 | 51 (2.008) | 38 – 76 (1.496 – 2.992) |

| Versaflex-FR flame retardant, expandable polyester braid | | |
|---|---|---|
| Size | Nominal Size | Size Range |
| 1/8 | 3 (0.118) | 2.4 – 6.4 (0.094 – 0.252) |
| 1/4 | 6 (0.236) | 3.2 – 9.5 (0.125 – 0.375) |
| 3/8 | 10 (0.394) | 4.7 – 16 (0.185 – 0.630) |
| 1/2 | 13 (0.512) | 6.4 – 19 (0.252 – 0.748) |
| 3/4 | 19 (0.748) | 13 – 32 (0.512 – 1.260) |
| 1-1/4 | 32 (1.256) | 19 – 45 (0.748 – 1.772) |
| 1-3/4 | 45 (1.772) | 32 – 70 (1.260 – 2.756) |
| 2 | 51 (2.008) | 38 – 76 (1.496 – 2.992) |

### Ordering Information

| | | |
|---|---|---|
| Color | Standard | Versaflex (metric) : Black (-0) Grey (-8)<br>Versaflex (imperial) : Black (-0)<br>Versaflex-FR : Black with a white X tracer (-09) |
| Standard packaging | On spools. | |
| Ordering description | Specify product name, size and color (for example, VERSAFLEX-FR-1/4-09-SP) | |





Catalog 1654025
Revised 3-13

www.te.com

Dimensions are shown for reference purposes only. Specifications subject to change.

Dimensions are in millimeters unless otherwise specified.

USA: +1 800 522 6752
Asia Pacific: +86 0 400 820 6015
UK: +44 800 267 666

For additional support numbers please visit www.te.com

## XFFR

### Halogen-Free, Flame-Retardant, Heat-Shrinkable Tubing

### Product Facts

- Emits minimal amounts of toxic or acid gasses during combustion
- Meets performance requirements of MIL-C-24640 and MIL-C-24643 cable jackets
- Resists moisture, fungus, and weathering
- Available in expansion ratios as high as 3:1
- XFFR has the following approvals:
  - ABS (American Bureau of Shipping)
  - Lloyd's (Lloyd's Register of Shipping)
- RoHS compliant

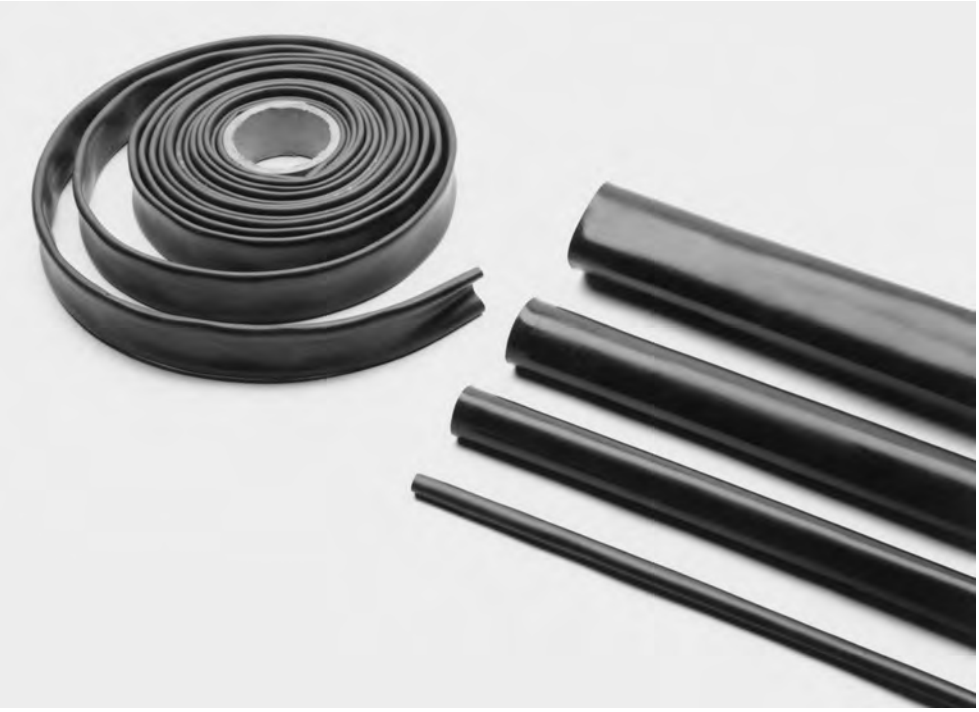

### Applications

XFFR halogen-free tubing can be used for rejacketing and repairing halogen-free cables in any enclosed area where a flame-retardant, halogen-free environment is required. These environments include tunnels, buildings, mass transit vehicles, and ships. When installed with S-1305 tape, the tubing can also be used in applications requiring water sealing and protection from abrasion and corrosion.

### Installation

Minimum shrink temperature: 70°C [158°F]

Minimum full recovery temperature: 121°C [250°F]

### Operating Temperature Range

-55°C to 110°C
[-67°F to 230°F]

### Specifications/Approvals

| Series | Military | Industry | TE |
|---|---|---|---|
| XFFR | MIL-C-24640<br>MIL-C-24643 | NES 713<br>NES 711 | RW-2016 |

| Available in: | Americas | Europe | Asia Pacific |
|---|---|---|---|
| | ■ | ■ | ■ |



Catalog 1654025
Revised 3-13

www.te.com

Dimensions are shown for reference purposes only. Specifications subject to change.

Dimensions are in millimeters unless otherwise specified.

USA: +1 800 522 6752
Asia Pacific: +86 0 400 820 6015
UK: +44 800 267 666

For additional support numbers please visit www.te.com

## XFFR (Continued)

### Product Dimensions

| Size | Inside Diameter | | Recovered Wall Thickness* |
|---|---|---|---|
| | Minimum Expanded as Supplied | Maximum Recovered After Heating | After Heating (Nominal) |
| XFFR-03 | 7.62 [0.300] | 2.54 [0.100] | 2.03 [0.080] |
| XFFR-04 | 10.16 [0.400] | 3.81 [0.150] | 2.03 [0.080] |
| XFFR-07 | 19.05 [0.750] | 5.59 [0.220] | 2.03 [0.080] |
| XFFR-11 | 27.94 [1.100] | 9.52 [0.375] | 2.67 [0.105] |
| XFFR-15 | 38.10 [1.500] | 12.70 [0.500] | 3.05 [0.120] |
| XFFR-20 | 50.80 [2.000] | 19.05 [0.750] | 3.05 [0.120] |
| XFFR-30 | 76.20 [3.000] | 31.75 [1.250] | 4.06 [0.160] |

*Wall thickness will be less if tubing recovery is restricted during shrinkage.



### Ordering Information

| | | |
|---|---|---|
| Color | Standard | Black (-0) |
| Size selection | Always order the largest size that will shrink snugly over the component to be covered. | |
| Standard packaging | 1.2-meter [4-foot] or 7.5-meter [25-foot] lengths. | |

### Part Numbering System

**XFFR - 03 X 4 / NM**

- **"NM"** - no mark
- **Length** in feet (4 feet standard)
- **Size**
- **Family**



Catalog 1654025
Revised 3-13

www.te.com

Dimensions are shown for reference purposes only. Specifications subject to change.

Dimensions are in millimeters unless otherwise specified.

USA: +1 800 522 6752
Asia Pacific: +86 0 400 820 6015
UK: +44 800 267 666

For additional support numbers please visit www.te.com

## ZH-100

### Flexible, Thin-Wall, Low-Fire-Hazard Tubing

### Product Facts

- 2:1 shrink ratio
- Low smoke emissions
- Flexible, flame-retardant
- No added halogens
- Low evolution of acid gases
- RoHS compliant

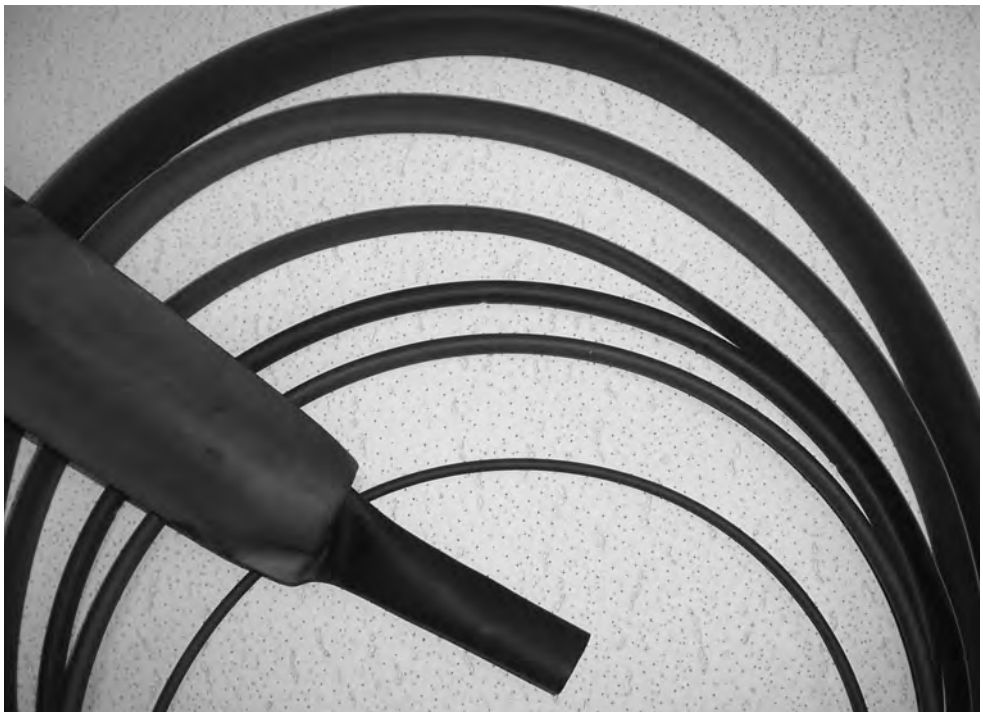

### Applications

ZH-100 is a flexible, thin-wall, heat-shrinkable tubing designed for low-fire-hazard applications. ZH-100 contains no added halogens, and exhibits excellent fire safety characteristics combined with low evolution of acid gases, while retaining good mechanical and fluid resistance properties.

### Installation

Minimum shrink temperature: 80°C [176°F]

Minimum full recovery temperature: 120°C [248°F]

### Operating Temperature Range

-30°C to 105°C
[-22°F to 221°F]

### Specifications/Approvals

| Series | Industry | TE |
|---|---|---|
| ZH-100 | BR 1326A | RW-2031 |

| Available in: | Americas | Europe | Asia Pacific |
|---|---|---|---|
| | ■ | ■ | ■ |



Catalog 1654025
Revised 3-13

www.te.com

Dimensions are shown for reference purposes only. Specifications subject to change.

Dimensions are in millimeters unless otherwise specified.

USA: +1 800 522 6752
Asia Pacific: +86 0 400 820 6015
UK: +44 800 267 666

For additional support numbers please visit www.te.com

## ZH-100 (Continued)

### Product Dimensions

| Size | Inside Diameter | | Recovered Wall Thickness* |
|---|---|---|---|
| | Minimum Expanded as Supplied | Maximum Recovered After Heating | After Heating |
| 1/8 | 3.2 [0.125] | 1.6 [0.062] | 0.50 ± 0.10 [0.019 ± 0.004] |
| 3/16 | 4.8 [0.187] | 2.4 [0.093] | 0.50 ± .0.10 [0.019 ± 0.004] |
| 1/4 | 6.4 [0.250] | 3.2 [0.125] | 0.65 ± 0.15 [0.026 ± 0.006] |
| 3/8 | 9.5 [0.375] | 4.8 [0.187] | 0.65 ± 0.15 [0.026 ± 0.006] |
| 1/2 | 12.7 [0.500] | 6.4 [0.250] | 0.65 ± 0.15 [0.026 ± 0.006] |
| 3/4 | 19.0 [0.750] | 9.5 [0.375] | 0.75 ± 0.15 [0.030 ± 0.006] |
| 1 | 25.4 [1.000] | 12.7 [0.500] | 0.90 ± 0.15 [0.035 ± 0.006] |
| 1 1/2 | 38.0 [1.500] | 19.0 [0.750] | 1.00 ± 0.20 [0.039 ± 0.008] |
| 2 | 51.0 [2.000] | 25.4 [1.000] | 1.15 ± 0.25 [0.045 ± 0.010] |

*Wall thickness will be less if tubing recovery is restricted during shrinkage.

### Ordering Information

| | | |
|---|---|---|
| Color | Standard | Black (-0) |
| Size selection | Always order the largest size that will shrink snugly over the component to be covered. Special order sizes are available upon request. | |
| Standard packaging | On spools. | |
| Ordering description | Specify product name, size and color (for example, ZH-100 1/8-0). | |





Catalog 1654025
Revised 3-13

www.te.com

Dimensions are shown for reference purposes only. Specifications subject to change.

Dimensions are in millimeters unless otherwise specified.

USA: +1 800 522 6752
Asia Pacific: +86 0 400 820 6015
UK: +44 800 267 666

For additional support numbers please visit www.te.com

## ZHTM

### Heat-Shrinkable, Flexible Tubing with Low Toxicity for Fire Safety Applications

### Product Facts

- 2:1 shrink ratio
- Low smoke emission
- System 100 tubing
- RoHS compliant

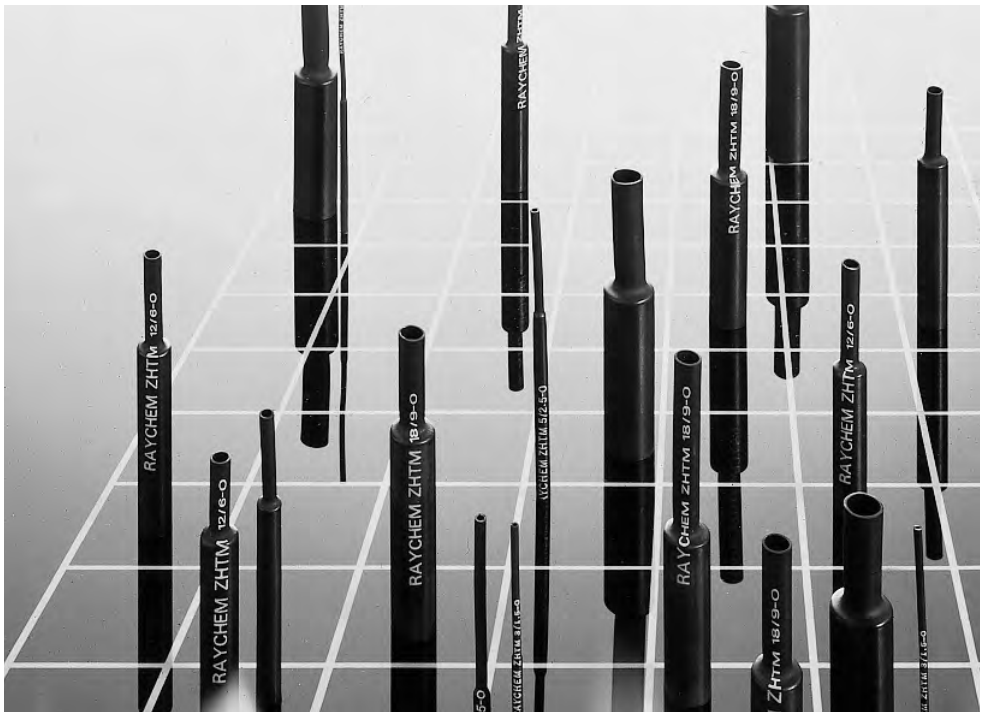


### Applications

A flexible, thick-wall, heat-shrinkable tubing to be used in conjunction with -100 molded parts and Zerohal cable to form System 100. This material exhibits excellent fire safety characteristics combined with low smoke emission and low evolution of acid gases while retaining good mechanical and fluid-resistance properties.

Used for insulation and protection of cables, harnesses, and electrical and electronic components in enclosed spaces, such as in marine applications, mass transit systems, and offshore installations, to reduce toxicity risks, or where equipment would be irreparably damaged by corrosive products of combustion.

### Installation

Minimum shrink temperature: 80°C [176°F]

Minimum full recovery temperature: 121°C [250°F]

### Operating Temperature Range

-30°C to 105°C
[-22°F to 221°F]

### Specifications/Approvals

| Series | Military | Agency | Industry | TE |
|---|---|---|---|---|
| ZHTM | Def. Stan. 59-97 Issue 3 Type 8 | BS 4G-198 Part 3 Type 15<br>VG 95343 Part 5 Type L<br>VDE 0341/Pt 9005 | BR 1326A | RW-2058 |

| Available in: | Americas | Europe | Asia Pacific |
|---|---|---|---|
| | ■ | ■ | ■ |



Catalog 1654025
Revised 3-13

www.te.com

Dimensions are shown for reference purposes only. Specifications subject to change.

Dimensions are in millimeters unless otherwise specified.

USA: +1 800 522 6752
Asia Pacific: +86 0 400 820 6015
UK: +44 800 267 666

For additional support numbers please visit www.te.com

## ZHTM (Continued)

### Product Dimensions

| Size | Inside Diameter | | Recovered Wall Thickness* |
|---|---|---|---|
| | Minimum Expanded as Supplied | Maximum Recovered After Heating | After Heating |
| 3/1.5 | 3.0 [0.118] | 1.5 [0.059] | 0.70 ± 0.10 [0.028 ± 0.004] |
| 5/2.5 | 5.0 [0.197] | 2.5 [0.098] | 0.75 ± 0.12 [0.030 ± 0.005] |
| 8/4 | 8.0 [0.315] | 4.0 [0.157] | 0.80 ± 0.15 [0.031 ± 0.006] |
| 12/6 | 12.0 [0.472] | 6.0 [0.236] | 0.90 ± 0.15 [0.035 ± 0.006] |
| 18/9 | 18.0 [0.709] | 9.0 [0.354] | 1.00 ± 0.18 [0.039 ± 0.007] |
| 24/12 | 24.0 [0.945] | 12.0 [0.472] | 1.10 ± 0.20 [0.043 ± 0.008] |
| 40/20 | 40.0 [1.575] | 20.0 [0.789] | 1.30 ± 0.23 [0.051 ± 0.009] |
| 50/30 | 50.0 [1.969] | 30.0 [1.181] | 1.50 ± 0.28 [0.059 ± 0.011] |

*Wall thickness will be less if tubing recovery is restricted during shrinkage.



### Ordering Information

| | | |
|---|---|---|
| Color | Standard | Black (-0) |
| Size selection | Always order the largest size that will shrink snugly over the component to be covered. Special order sizes are available upon request. | |
| Standard packaging | On spools. | |
| Ordering description** | Specify product name, size and color (for example, ZHTM 8/4-0-SP). | |

**Europe only. For supply to Def Stan and BS add -DS or -BS to ordering description.

## Engineering Notes



Catalog 1654025
Revised 3-13

www.te.com

Dimensions are shown for reference purposes only. Specifications subject to change.

Dimensions are in millimeters unless otherwise specified.

USA: +1 800 522 6752
Asia Pacific: +86 0 400 820 6015
UK: +44 800 267 666

For additional support numbers please visit www.te.com

## Table of Contents


**Overview** ....4-2
**General Information** ....4-3, 4-4
**Selection Tables** ....4-5, 4-6
**Part Numbering System** ....4-7
**Visual Selection Guide** ....4-8 to 4-20
**Boot Adapter Selection Tables** ....4-21 to 4-23
**Material Selection Table** ....4-24
**Materials**

| | | |
|---|---|---|
| -3 | Semirigid modified polyolefin | 4-25, 4-26 |
| -4 | Flexible polyolefin | 4-27, 4-28 |
| -12 | Modified fluoroelastomer | 4-29, 4-30 |
| -25 | Fluid-resistant modified elastomer | 4-31, 4-32 |
| -25S | Fluid-resistant screened elastomer | 4-33, 4-34 |
| -50 | Fluid-resistant modified elastomer | 4-35, 4-36 |
| -51 | Chemical-resistant fluoroelastomer | 4-37, 4-38 |
| -55 | Flexible fluoropolymer | 4-39, 4-40 |
| -71 | Semirigid modified polyolefin | 4-41, 4-42 |
| -100 | Low-fire-hazard material | 4-43, 4-44 |
| -100S | Low-fire-hazard screened material | 4-45, 4-46 |
| -125 | Flexible fluoropolymer | 4-47, 4-48 |
| -770 | CBRN fluoroelastomer | 4-49 to 4-51 |
| -780 | CBRN fluroelastomer | 4-52 to 4-54 |
| -790 | CBRN fluroelastomer | 4-55 to 4-57 |

**Caps**

| | | |
|---|---|---|
| 101A011 to 094 | End caps | 4-58, 4-59 |
| SSC | Heat-shrinkable end caps | 4-60, 4-61 |

**Boots**

| | | |
|---|---|---|
| 202A111 to 196 | Straight boot | 4-62 |
| 202C611 to 663 | Uniboot | 4-63 |
| 202D121 to 196 | Straight, lipped boot | 4-64 |
| 202D211 to 299 | Straight, lipped boot | 4-65 |
| 202D921 to 963 | Straight, lipped boot | 4-66 |
| 202F211 to 274 | Straight, lipped boot | 4-67 |
| 202G211 to 253 | Straight, lipped boot | 4-68 |
| 202G611 to 653 | Uniboot | 4-69 |
| 202K121 to 185 | Straight, lipped boot | 4-70 |
| 214A011 to 052 | D-subminiature, straight boot | 4-71 |
| 214A311 to 352 | D-subminiature, straight boot | 4-72 |
| 222A111 to 196 | Right-angled boot | 4-73 |
| 222D121 to 196 | Right-angled, lipped boot | 4-74 |
| 222D211 to 299 | Right-angled, lipped boot | 4-75 |
| 222D921 to 963 | Right-angled, lipped boot | 4-76 |
| 222F211 to 285 | Right-angled, lipped boot | 4-77 |
| 222K121 to 185 | Right-angled, lipped boot | 4-78 |
| 234A011 to 071 | D-subminiature, right-angled boot | 4-79 |
| 234A111 to 152 | D-subminiature, side-entry boot | 4-80 |
| 234A611 to 671 | D-subminiature, 90° end-entry boot | 4-81 |
| 242W042 to 063 | 45° angled boot | 4-82 |
| Micro Molded Shapes | Microboots | 4-83 to 4-87 |

**Feedthroughs**

| | | |
|---|---|---|
| 207W213 to 256 | Two-part feedthrough | 4-88 |
| CES | Heat-shrinkable cable entry seals | 4-89 to 4-92 |

**Transitions**

| | | |
|---|---|---|
| 301A011 to 048 | T transition | 4-93 |
| 301A511 to 514 | Slimline T transition | 4-94 |
| 322A112 to 158 | T transition | 4-95 |
| 342A012 to 058 | 45° side-breakout transition | 4-96 |
| 362A014 to 114 | 30° side-breakout transition | 4-97 |
| 381A301 to 304 | Slimline Y transition | 4-98 |


**Note:** Users should independently evaluate the suitability of the product for their application. Before ordering, check with TE Connectivity for most current data.





Catalog 1654025
Revised 3-13

www.te.com

Dimensions are shown for reference purposes only. Specifications subject to change.

Dimensions are in millimeters unless otherwise specified.

USA: +1 800 522 6752
Asia Pacific: +86 0 400 820 6015
UK: +44 800 267 666

For additional support numbers please visit www.te.com

## Table of Contents (Continued)


| | | |
|---|---|---|
| 382A012 to 046 | Y transition | 4-99 |
| 382C312, 322 & 332 | Slimline Y transition | 4-100 |
| 462A011 to 060 | Transition, one to three cables | 4-101 |
| 462A421 to 424 | Slimline transition, one to three cables | 4-102 |
| 562A011 to 067 | Transition, one to four cables | 4-103 |
| QFT | Configurable heat-shrink transition | 4-104, 4-105 |
| SSB, T, F to 8S | Chem-X Heavy Duty Breakout Boots | 4-106, 4-107 |
| **Accessories** | | |
| 202W302 to 342 | Heat-shrink bobbins | 4-108, 4-109 |
| 400W242 | Heat-shrink positioning ring | 4-110, 4-111 |
| RayOLOn Kits | Roll-on sealing sleeve | 4-112, 4-113 |
| SEB | Raychem Side Entry Bushing | 4-114 |
| shrinkHOoP | Cable clamp heat-shrink grommet | 4-115 to 4-117 |
| XL Products | Conversion Table | 4-118, 4-119 |
| Sigmaform Products | Conversion Table | 4-120 |


## Overview

TE heat-shrinkable molded parts, with adhesive coating, form a watertight seal, protecting cables and equipment from corrosion and mechanical abuse while providing excellent electrical insulating properties. Meeting requirements for most mass-transit, military, and commercial marine applications, Raychem brand molded parts include:

- SSC end caps, which provide optimum waterproofing and environmental protection for underwater, underground, or outdoor applications. The end caps are highly resistant to moisture, fungus, and weathering.
- Heat-shrinkable boots and transitions, which replace tapes, mold-in-place epoxies, and grease. These molded parts can be used for cable breakouts, transitions, and terminations. For example, they provide reliable sealing to specific altitudes on standard Navy cable jackets and on lead, steel, aluminum, copper, and most elastomeric insulation materials.

All of these molded parts fit a wide variety of applications.

To select the right part for your application, follow these steps:

- Select the necessary shape.
- Match the shape with the appropriate material.
- Select a compatible adhesive, if needed, to provide additional environmental protection. Adhesives come either preinstalled or as separate components (see Section 5).

Also available is an extensive line of adapters (see Section 6) and heat-shrinkable tubings (see Section 3) to further integrate and strengthen harness assemblies.

Whatever your application, TE molded parts almost always meet the performance characteristics you require, including operation in low- and high-temperature environments; mechanical strength; resistance to fluids, flame, and mechanical abuse; environmental sealing; and strain relief.



Catalog 1654025
Revised 3-13

www.te.com

Dimensions are shown for reference purposes only. Specifications subject to change.

Dimensions are in millimeters unless otherwise specified.

USA: +1 800 522 6752
Asia Pacific: +86 0 400 820 6015
UK: +44 800 267 666

For additional support numbers please visit www.te.com

## General Information

### Bulbous Molded Parts

TE bulbous-shaped molded parts provide rugged mechanical and environmental protection, meet numerous specifications, and have been used successfully in military wire and cable harnesses for more than 30 years.

Most connector strain relief boots come in two versions:

- With an adapter lip molded into the “H” end, which locks into the groove on the backshell adapter (part number is identified with a “D” or “K”).
- Without the adapter lip (the boot may be installed directly on the rear of connector threads 12 mm [.472] long or longer). This part number is identified with an “A.”

Many other optional features are available, such as molding ports and drain holes. For other modifications and custom shapes, please contact TE.

### Modifications

Certain variations of the standard shapes, such as shorter leg lengths or specific over expansions, are possible. Modifications must be requested prior to your order, for feasibility.

### Molding Port Modifications (-00)

Some specifications call for potting the molded shape with sealant to provide additional protection from moisture. Most of the bulbous boots and transitions can be ordered with molding ports for this purpose.

### Drain Hole Modification (-88)

Some specifications require drain holes in the molded part to provide an exit for condensation. Drain holes must be requested when you place your order.

### Specials

Complete design, tooling, and production of custom molded shapes and special adaptations are also possible. Estimates are made upon request.





Catalog 1654025
Revised 3-13

www.te.com

Dimensions are shown for reference purposes only. Specifications subject to change.

Dimensions are in millimeters unless otherwise specified.

USA: +1 800 522 6752
Asia Pacific: +86 0 400 820 6015
UK: +44 800 267 666

For additional support numbers please visit www.te.com

## General Information (Continued)

### Breakout Boots

Heavy-duty breakouts provide mechanical strain relief and environmental sealing for power cables where the cable jacket is cut back and conductors broken out.

These boots are used widely in ship building and meet the requirements of the following:

- Lloyd's Register of Shipping
- American Bureau of Shipping (ABS)
- DOD-STD-2003
- SAE-AS-81765/1

### Cable End Caps

Heat-shrinkable end caps provide a reliable method of sealing power cables, pipes, conduit, and other cylindrical objects against corrosion and moisture penetration.

### Slim-Line Molded Parts

With their low profile, these flexible molded parts conform to cables better and create less bulk at transition points and connectors than bulbous molded parts.

TE molded parts are available in a variety of slim-line shapes, including straight and right-angle boots as well as transitions. A small family of parts can provide a wide variety of expansions (under expansion, over expansion, cutoff). Modifications are easily provided.



Dimensions are shown for reference purposes only. Specifications subject to change.

Dimensions are in millimeters unless otherwise specified.

USA: +1 800 522 6752
Asia Pacific: +86 0 400 820 6015
UK: +44 800 267 666

For additional support numbers please visit www.te.com

## Selection Tables

### Boots

| Application | Family Description | Typical Shapes |
|---|---|---|
| Lipped boots for use with a circular adapter | 202D121 to 196<br>222D121 to 196<br>202K121 to 185<br>222K121 to 185<br>242W042 to 063 | 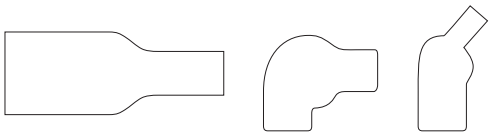 |
| Nonlipped boots for use directly on a circular connector | 202A111 to 196<br>222A111 to 196 | |
| Low-profile lipped boots for use with a circular adapter | 202D211 to 299<br>222D211 to 299<br>202F211 to 274<br>222F211 to 285<br>202G211 to 253 | |
| Lipped boots for use with a circular adapter | 202D921 to 963<br>222D921 to 963 | 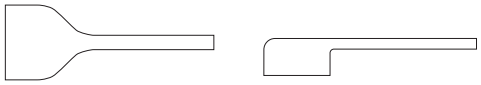 |
| Lipped boots with compressible design for use with a circular adapter | 202C611 to 663<br>202G611 to 653 | |
| Adapter boots for use with D-subminiature connectors | 214A011 to 052<br>234A011 to 071<br>214A311 to 352<br>234A111 to 152<br>234A611 to 671 | |





Catalog 1654025
Revised 3-13

www.te.com

Dimensions are shown for reference purposes only. Specifications subject to change.

Dimensions are in millimeters unless otherwise specified.

USA: +1 800 522 6752
Asia Pacific: +86 0 400 820 6015
UK: +44 800 267 666

For additional support numbers please visit www.te.com

## Selection Tables (Continued)

### Transitions

| Application | Family Description | Typical Shapes |
|---|---|---|
| Breakout Boots | SSB, T, F, 6S, 85 | 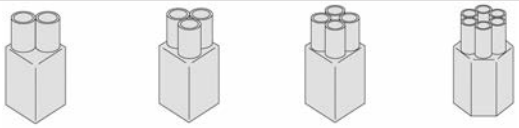 |
| "T" Transitions | 301A011 to 048<br>301A511 to 514<br>322A112 to 158 | 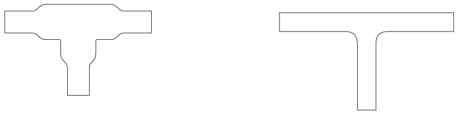 |
| 45° Transitions | 342A012 to 058 | |
| 30° Transitions | 362A014 to 114 | 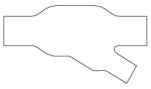 |
| “Y” Transitions | 381A301 to 304<br>382A012 to 046 | 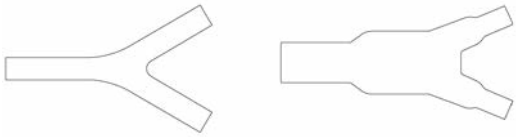 |
| 3:1 Transitions | 462A011 to 060<br>462A421 to 424 | |
| 4:1 Transitions | 562A011 to 067 | 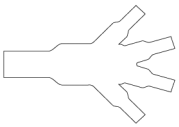 |

### Shape Selection: Other Products

| Application | Family Description | Typical Shapes |
|---|---|---|
| Feedthroughs | 207W213 to 256<br>and<br>CES | 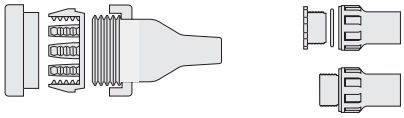 |
| D-Subminiatures | 214A011 to 052 | 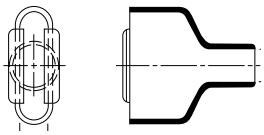 |
| End Caps | 101A011 to 094<br>and<br>SSC | 101A Series 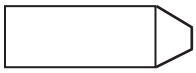 SSC Series |



Dimensions are shown for reference purposes only. Specifications subject to change.

Dimensions are in millimeters unless otherwise specified.

USA: +1 800 522 6752
Asia Pacific: +86 0 400 820 6015
UK: +44 800 267 666

For additional support numbers please visit www.te.com

## Part Numbering System

**2 0 2D 1 21 - 3 - 01 / 42 - 0**

**Color** (0 = Black). Other colors factory quote

**Optional Adhesive* Coating** (precoated in factory)

**Modification** (available on request)
- Over expansion
- Cutoff
- Molding ports (injection and vent)

**Material****

**Size of Part in Family:** From 11 (= smallest) to 99 (= largest)

**Family Number**

**Type of Part:**
A = Nonlipped boots/transitions
C = Lipped boot
D = Lipped boot
F = Lipped boot
K = Lipped boot
S = Rayaten
G = Lipped boot
W = Other shapes

**Angle of Part:**

| All openings | One opening |
|---|---|
| **Circular** | **Noncircular** |
| **0 = Straight** | **0 = Straight** |
| 2 = 90˚ | 3 = 90˚ |
| 4 = 45˚ | 5 = 45˚ |
| 6 = 30˚ | 7 = 30˚ |

**Number of openings in the part**

*See section 5 for details on adhesives.
**See page 4-24 for details on materials.





Catalog 1654025
Revised 3-13

www.te.com

Dimensions are shown for reference purposes only. Specifications subject to change.

Dimensions are in millimeters unless otherwise specified.

USA: +1 800 522 6752
Asia Pacific: +86 0 400 820 6015
UK: +44 800 267 666

For additional support numbers please visit www.te.com

## Visual Selection Guide

### Boots: Circular Connectors — Lipped

### Lipped Boots for Use With an Adapter

As supplied

After recovery

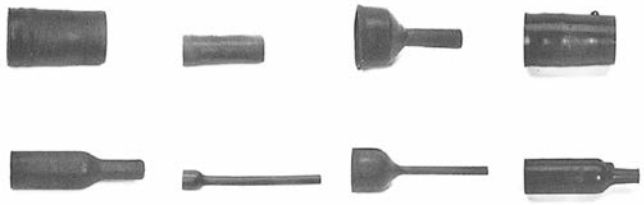

202D121 through 196 | 202D211 through 299 | 202D921 through 963 | 202K121 through 185

As supplied

After recovery

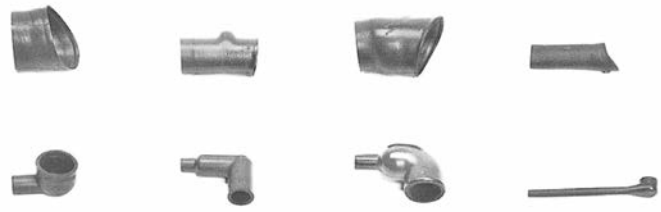

222B012 through 063 | 222B112 and 123 | 222D121 through 196 | 222D211 through 299

As supplied

After recovery

222D921 through 963 | 222K121 through 185 | 242 A312 and 322



Dimensions are shown for reference purposes only. Specifications subject to change.

Dimensions are in millimeters unless otherwise specified.

USA: +1 800 522 6752
Asia Pacific: +86 0 400 820 6015
UK: +44 800 267 666

For additional support numbers please visit www.te.com

## Visual Selection Guide (Continued)

### Boots: Circular Connectors — Nonlipped

### Nonlipped Boots for Direct Attachment on Connectors

As supplied

After recovery

202A011 through 096 | 202A111 through 196 | 202A212 through 264 | 202A312 through 364

As supplied

After recovery

202A915 | 202A921 | 203A021

As supplied

After recovery

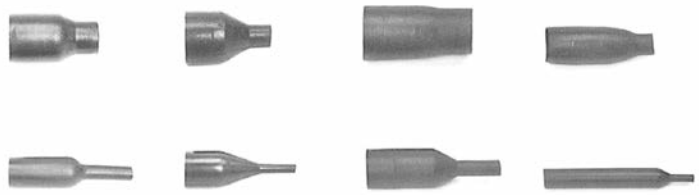

203A211 | 203A312 | 204A011 | 204A311

As supplied

After recovery

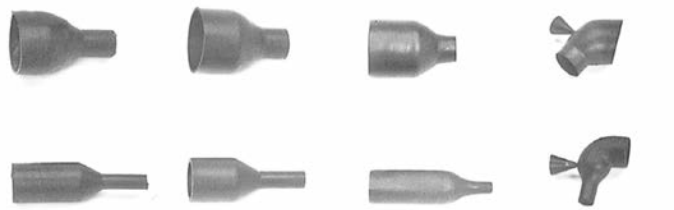

204A511 | 204A612 | 208A011 through 086 | 222A011





Catalog 1654025
Revised 3-13

www.te.com

Dimensions are shown for reference purposes only. Specifications subject to change.

Dimensions are in millimeters unless otherwise specified.

USA: +1 800 522 6752
Asia Pacific: +86 0 400 820 6015
UK: +44 800 267 666

For additional support numbers please visit www.te.com

## Visual Selection Guide (Continued)

### Boots: Circular Connectors — Nonlipped (Continued)

### Nonlipped Boots for Direct Attachment on Connectors

As supplied

After recovery

222A111 through 196 | 222A213 through 255 | 234A313 through 355 | 223A213 through 233 | 224A012

As supplied

After recovery

226A075 | 228A011 through 097 | 242A142 | 243A012 & 022 | 246A166

As supplied

After recovery

202B521 through 598

### Boots: Circular Connectors–Slim-Line

As supplied

After recovery

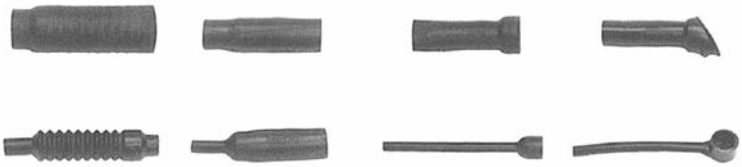

202C611 through 633
202G621 through 653 | 202E334 through 346 | 202F211 through 274
202G211 through 253 | 222F211 through 285



Dimensions are shown for reference purposes only. Specifications subject to change.

Dimensions are in millimeters unless otherwise specified.

USA: +1 800 522 6752
Asia Pacific: +86 0 400 820 6015
UK: +44 800 267 666

For additional support numbers please visit www.te.com

## Visual Selection Guide (Continued)

### Boots: Rectangular Connectors

As supplied

After recovery

214A011 through 052 | 214A124 and 133 | 214A311 through 352

As supplied

After recovery

214A814

As supplied

After recovery

234A011 through 071 | 234A111 | 234A333 | 234A443

As supplied

After recovery

234B111





Catalog 1654025
Revised 3-13

www.te.com

Dimensions are shown for reference purposes only. Specifications subject to change.

Dimensions are in millimeters unless otherwise specified.

USA: +1 800 522 6752
Asia Pacific: +86 0 400 820 6015
UK: +44 800 267 666

For additional support numbers please visit www.te.com

## Visual Selection Guide (Continued)

### Transitions: Bulbous

As supplied

After recovery

301A011 through 048 | 302A012 through 037 | 302A214 | 322A012 through 037 | 322A112 through 158

As supplied

After recovery

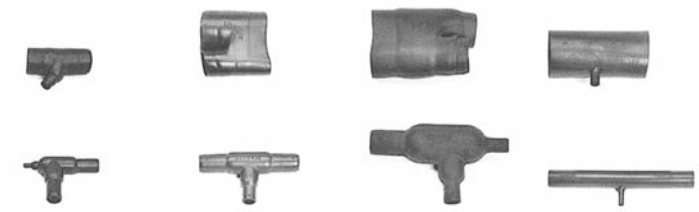

322A315 | 322A412 through 434 | 322A514 | 322B813

As supplied

After recovery

323A222 | 341A015 | 342A012 through 058

As supplied

After recovery

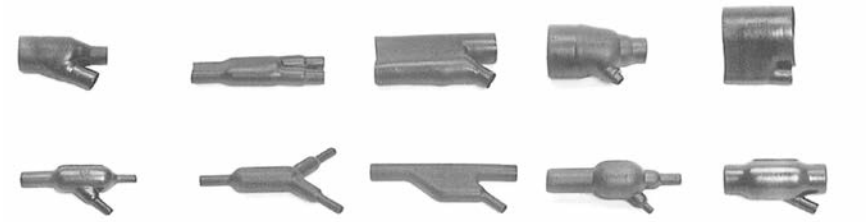

342A112 through 138 | 342A215 | 342A313 and 323 | 343A014 through 027 | 362A014 through 114



Dimensions are shown for reference purposes only. Specifications subject to change.

Dimensions are in millimeters unless otherwise specified.

USA: +1 800 522 6752
Asia Pacific: +86 0 400 820 6015
UK: +44 800 267 666

For additional support numbers please visit www.te.com

## Visual Selection Guide (Continued)

### Transitions: Bulbous
(Continued)

As supplied

After recovery

363A018 | 381A015 | 381A115 | 382A012 through 046 | 402A013

As supplied

After recovery

403A123 through 155 | 413A013 and 024 | 422A011 | 422A414

As supplied

After recovery

422A616 | 422A716 | 422A813 | 423A014 | 423A117

As supplied

After recovery

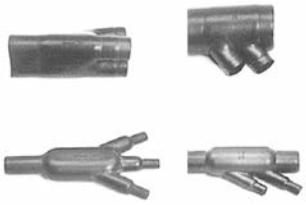

462A011 through 060 | 462A214





Catalog 1654025
Revised 3-13

www.te.com

Dimensions are shown for reference purposes only. Specifications subject to change.

Dimensions are in millimeters unless otherwise specified.

USA: +1 800 522 6752
Asia Pacific: +86 0 400 820 6015
UK: +44 800 267 666

For additional support numbers please visit www.te.com

## Visual Selection Guide (Continued)

### Transitions: Bulbous
(Continued)

As supplied

After recovery

502A812 through 845 | 522A013 | 561A017

As supplied

After recovery

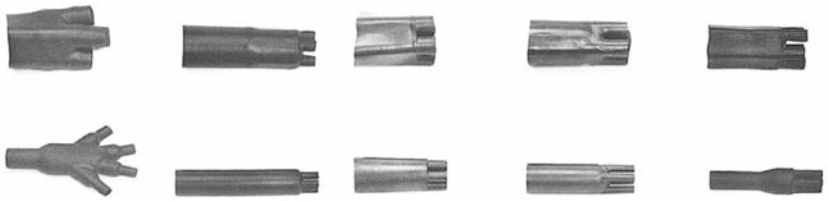

562A011 through 067 | 602A012 | 602A022 | 602A114 | 602A212

As supplied

After recovery

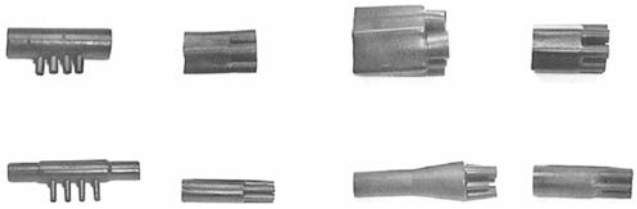

622A014 | 703A155 | 704A011 and 012 | 902A014

### Transitions: Slim-Line

As supplied

After recovery

301A511 through 514 | 381A301 through 304 | 462A421 through 424

## Visual Selection Guide (Continued)

### Covers

As supplied

After recovery

102A911 102A951 102A961 102A962 102A981

As supplied

After recovery

102A992 102A993 102A994 202A817

As supplied

After recovery

220A012 through 023 234A211 234B111 and 122 254A015

As supplied

After recovery

302A734 401A112 and 402A212





Catalog 1654025
Revised 3-13

www.te.com

Dimensions are shown for reference purposes only. Specifications subject to change.

Dimensions are in millimeters unless otherwise specified.

USA: +1 800 522 6752
Asia Pacific: +86 0 400 820 6015
UK: +44 800 267 666

For additional support numbers please visit www.te.com

## Visual Selection Guide (Continued)

### Covers (Continued)

As supplied

After recovery

401A212 and 403A312 | 401A414 | 403A016 | 501A012 and 502A212

As supplied

After recovery

601A012

### Sleeves

As supplied

After recovery

201A711 through 792 | 202B811 through 821

As supplied

After recovery

207W213 through 264 with A-type nut | 207W213-x-01 through 264-x-01 with B-type nut



Dimensions are shown for reference purposes only. Specifications subject to change.

Dimensions are in millimeters unless otherwise specified.

USA: +1 800 522 6752
Asia Pacific: +86 0 400 820 6015
UK: +44 800 267 666

For additional support numbers please visit www.te.com

## Visual Selection Guide (Continued)

### Caps

As supplied

After recovery

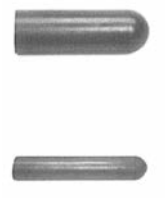

101A011 thru 094

### Miscellaneous

204A711 and 002A011
Riser and Plug
(Not heat-shrinkable)





Catalog 1654025
Revised 3-13

www.te.com

Dimensions are shown for reference purposes only. Specifications subject to change.

Dimensions are in millimeters unless otherwise specified.

USA: +1 800 522 6752
Asia Pacific: +86 0 400 820 6015
UK: +44 800 267 666

For additional support numbers please visit www.te.com

## Visual Selection Guide (Continued)

### Selected Molded Shapes Families

As supplied

After recovery

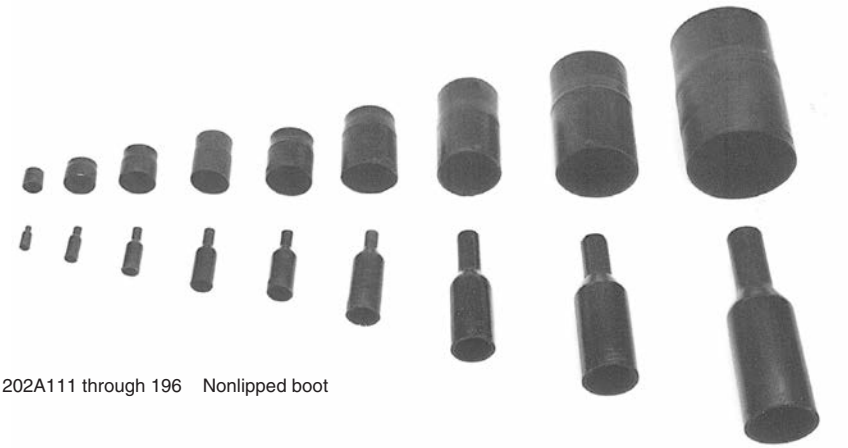

202A111 through 196 Nonlipped boot

As supplied

After recovery

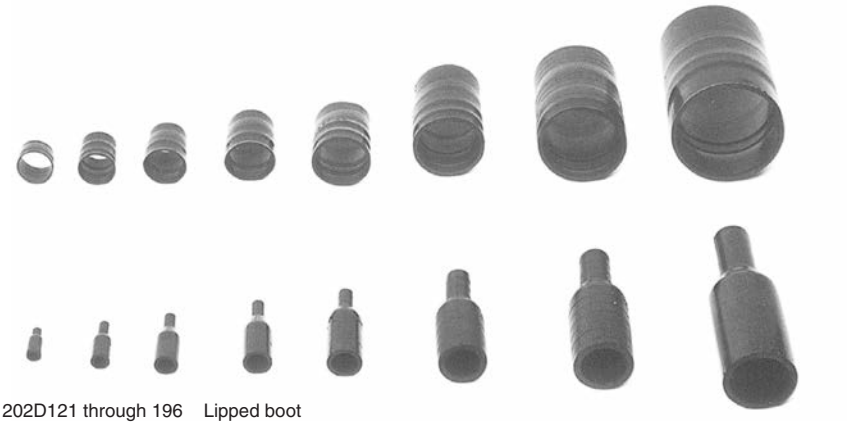

202D121 through 196 Lipped boot



Dimensions are shown for reference purposes only. Specifications subject to change.

Dimensions are in millimeters unless otherwise specified.

USA: +1 800 522 6752
Asia Pacific: +86 0 400 820 6015
UK: +44 800 267 666

For additional support numbers please visit www.te.com

## Visual Selection Guide (Continued)

### Selected Molded Shapes Families (Continued)

As supplied

After recovery

202A212 through 264 Nonlipped boot

202D211 through 299 Lipped boot

As supplied

After recovery

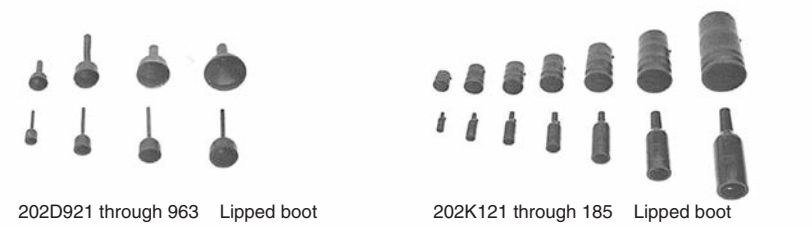

202D921 through 963 Lipped boot

202K121 through 185 Lipped boot

As supplied

After recovery

207W213 through 264 Feedthrough

214A011 through 052 Rectangular boot

As supplied

After recovery

222A111 through 196 90° boot nonlipped

222A213 through 255 90° boot nonlipped





Catalog 1654025
Revised 3-13

www.te.com

Dimensions are shown for reference purposes only. Specifications subject to change.

Dimensions are in millimeters unless otherwise specified.

USA: +1 800 522 6752
Asia Pacific: +86 0 400 820 6015
UK: +44 800 267 666

For additional support numbers please visit www.te.com

## Visual Selection Guide (Continued)

### Selected Molded Shapes Families (Continued)

As supplied

After recovery

222A313 through 355 90° boot nonlipped

222D121 through 196 90° boot lipped

As supplied

After recovery

222D211 through 299 90° boot lipped

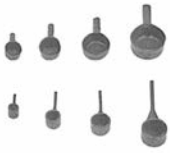

222D921 though 963 90° boot lipped

As supplied

After recovery

222K121 through 185 90° boot lipped

301A011 through 048 T transition



Dimensions are shown for reference purposes only. Specifications subject to change.

Dimensions are in millimeters unless otherwise specified.

USA: +1 800 522 6752
Asia Pacific: +86 0 400 820 6015
UK: +44 800 267 666

For additional support numbers please visit www.te.com

## Boot Adapter Selection Tables

### Table 1. Boots

| Boot Type | Material Dash Number | Part No. | Dimensions: Cable Diameter Range | Dimensions: Length | Fits Adapter Order Number: Solid | Fits Adapter Order Number: Spin Coupling | Fits Adapter Order Number: Entry Size Shielded | Fits Adapter Order Number: Tinel-Lock |
|---|---|---|---|---|---|---|---|---|
| Uni-boot | 50, 51<br>71 | 202C611 | 4.83-9.65 [.19-.38] | 120.65 [4.75] | — | — | 04 | 04 |
| | | 202C621 | 8.13-16.26 [.32-.64] | 133.35 [5.25] | 12 | 12—14 | 06-08 | 04-07 |
| | | 202C632 | 12.70-25.40 [.50-1.00] | 146.05 [5.75] | 14-16 | 16-18 | 10-14 | 10-16 |
| | | 202C642 | 17.53-35.05 [.69-1.38] | 158.75 [6.25] | 18-20 | 20 | 12-18 | 12-18 |
| | | 202C653 | 22.35-44.20 [.88-1.74] | 171.45 [6.75] | 22-32 | 22-32 | 18-20 | 16-20 |
| | | 202C663 | 22.86-55.63 [.90-2.19] | 236.22 [9.30] | 24, 28, 31 | 32, 36 | — | — |
| | 55, 780, 790 | 202G621 | 8.13-16.26 [.32-.64] | 133.86 [5.27] | 12-14 | 12-14 | 06-08 | 04-07 |
| | | 202G632 | 12.70-25.40 [.50-1.00] | 151.13 [5.95] | 16 | 16-18 | 10-14 | 08-12 |
| | | 202G642 | 17.53-35.05 [.69-1.38] | 157.23 [6.19] | 18-20 | 20 | 12-18 | 12-18 |
| | | 202G653 | 22.35-44.20 [.88-1.74] | 170.18 [6.70] | 22-32 | 22-32 | 18-20 | 16-22 |
| | | — | — | — | 16-24, 61 | 22-28, 61 | — | — |
| Low-profile, Straight | 50, 51<br>71<br>770 | 202F211 | 6.60-15.75 [.26-.62] | 105.16 [4.14] | 10 | 08-10 | 04-07 | 04-07 |
| | | 202F221 | 7.62-19.30 [.30-.76] | 123.95 [4.88] | 12-14 | 12-14 | 07-10 | 05-08 |
| | | 202F232 | 8.89-22.86 [.35-.90] | 146.30 [5.76] | 16 | 16-18 | 10-14 | 08-12 |
| | | 202F242 | 10.16-27.18 [.40-1.07] | 172.21 [6.78] | 18-20 | 20 | 12-18 | 12-16 |
| | | 202F253 | 10.92-29.97 [.43-1.18] | 185.16 [7.29] | 22 | 22 | 18-20 | 16-18 |
| | | 202F263 | 12.70-36.83 [.50-1.45] | 213.61 [8.41] | 24-28 | 24-28 | 20 | 18-20 |
| | | 202F274 | 14.99-42.93 [.59-1.69] | 203.20 [8.00] | 24 | 32 | — | — |
| | 55<br>780, 790 | 202G221 | 7.62-19.30 [.30-.76] | 121.16 [4.77] | 12-14 | 12-14 | 07-10 | 05-08 |
| | | 202G232 | 8.89-22.86 [.35-.90] | 138.68 [5.46] | 16 | 16-18 | 10-14 | 10-12 |
| | | 202G242 | 10.16-27.18 [.40-1.07] | 159.51 [6.28] | 18-20 | 20 | 14-18 | 12-16 |
| | | 202G253 | 10.92-29.97 [.43-1.18] | 177.80 [7.00] | 22-28 | 22-24 | 16-20 | 16-18 |
| | | — | — | — | 16-20 | 20-24 | — | — |
| Low-profile, 90° | 50, 51<br>71<br>770 | 222F211 | 6.60-15.75 [.26-.62] | 105.16 [4.14] | 10 | 08-10 | 04-07 | 04-07 |
| | | 222F221 | 7.62-20.83 [.30-.82] | 123.95 [4.88] | 12-14 | 12-14 | 07-10 | 05-10 |
| | | 222F232 | 8.89-22.86 [.35-.90] | 146.30 [5.76] | 16 | 16-18 | 10-14 | 08-12 |
| | | 222F242 | 10.16-27.18 [.40-1.07] | 172.21 [6.78] | 18-20 | 20 | 12-18 | 12-16 |
| | | 222F253 | 10.92-29.97 [.43-1.18] | 185.16 [7.29] | 22 | 22 | 18, 20 | 16-18 |
| | | 222F263 | 12.70-36.83 [.50-1.45] | 213.61 [8.41] | 24-28 | 24-28 | 20 | 18, 20 |
| | | 222F274 | 14.99-42.43 [.59-1.69] | 224.54 [8.84] | 24 | 32 | — | — |
| | | 222F285 | 17.53-61.21 [.69-2.41] | 227.33 [8.95] | 24-32 | 32-40 | — | — |

(continued on next page)





Catalog 1654025
Revised 3-13

www.te.com

Dimensions are shown for reference purposes only. Specifications subject to change.

Dimensions are in millimeters unless otherwise specified.

USA: +1 800 522 6752
Asia Pacific: +86 0 400 820 6015
UK: +44 800 267 666

For additional support numbers please visit www.te.com

## Boot Adapter Selection Tables (Continued)

### Table 1. Boots (Continued)

| Boot Type | Material Dash Number | Part No. | Dimensions: Cable Diameter Range | Dimensions: Length | Fits Adapter Order Number: Solid | Fits Adapter Order Number: Spin Coupling | Fits Adapter Order Number: Entry Size Shielded | Fits Adapter Order Number: Tinel-Lock |
|---|---|---|---|---|---|---|---|---|
| Low-profile, Straight | 3,4,25 -12, -100 | 202D211 | 6.60-15.75 [.26-.62] | 105.92 [4.17] | 08 | 08-10 | 06-07 | 04-07 |
| | | 202D221 | 7.62-19.30 [.30-.76] | 121.16 [4.77] | 08-10 | 08-10 | 08 | 06-07 |
| | | 202D232 | 8.89-22.86 [.35-.90] | 138.68 [5.46] | 10-12 | 10-12 | 10-12 | 08-10 |
| | | 202D242 | 10.16-27.18 [.40-1.07] | 159.51 [6.28] | 12-14 | 12-14 | 12-14 | 10-12 |
| | | 202D253 | 10.92-29.97 [.43-1.18] | 177.80 [7.00] | 16-18 | 16-18 | 16-18 | 14-16 |
| | | 202D263 | 12.70-36.83 [.50-1.45] | 203.20 [8.00] | 20-22 | 20-22 | 18-20 | 18-20 |
| | | 202D274 | 14.99-42.93 [.59-1.69] | 203.20 [8.00] | 24 | 28 | 22-24 | 22-24 |
| | | 202D285 | 18.29-55.88 [.72-2.20] | 203.20 [8.00] | 28 | 32-34 | 28 | — |
| | | 202D296 | 20.07-59.69 [.79-2.35] | 203.20 [8.00] | — | 40 | — | — |
| | | 202D299 | 23.37-72.39 [.92-2.85] | 203.20 [8.00] | — | 44 | — | — |
| Low-profile, 90° | 3,4,25 -12, -100 | 222D211 | 6.60-15.75 [.26-.62] | 105.16 [4.14] | 08 | 08-10 | 06-07 | 04-07 |
| | | 222D221 | 7.62-19.30 [.30-.76] | 123.95 [4.88] | 08-10 | 08-10 | 08 | 06-08 |
| | | 222D232 | 8.89-22.86 [.35-.90] | 146.30 [5.76] | 10-12 | 10-12 | 10-12 | 08-10 |
| | | 222D242 | 10.16-27.18 [.40-1.07] | 172.21 [6.78] | 12-14 | 12-14 | 12-14 | 10-12 |
| | | 222D253 | 10.92-29.97 [.43-1.18] | 185.16 [7.29] | 16-18 | 16-18 | 16-18 | 14-16 |
| | | 222D263 | 12.70-36.83 [.50-1.45] | 213.61 [8.41] | 20-22 | 20-22 | 18-20 | 18-20 |
| | | 222D274 | 14.99-42.93 [.59-1.69] | 224.54 [8.84] | 24 | 28 | 22-24 | 22-24 |
| | | 222D285 | 18.29-55.88 [.72-2.20] | 227.33 [8.95] | 28 | 32-34 | 28 | |
| | | 222D296 | 20.07-59.69 [.79-2.35] | 233.43 [9.19] | — | 40 | — | — |
| | | 222D299 | 23.37-72.39 [.92-2.85] | 203.20 [8.00] | — | 44 | — | — |
| Bulbous, Straight | 3,4,25 -12, -100 | 202D121 | 6.10-19.05 [.24-.75] | 38.10 [1.50] | — | 08 | 04-05 | 04-07 |
| | | 202D132 | 7.11-23.37 [.28-.92] | 54.86 [2.16] | 08 | 10 | 06-07 | 06-08 |
| | | 202D142 | 7.62-25.15 [.30-.99] | 66.80 [2.63] | 10 | 12-14 | 09-10 | 07-10 |
| | | 202D153 | 8.89-30.48 [.35-1.20] | 80.10 [3.15] | 12-14 | 16-18 | 11-14 | 10-12 |
| | | 202D163 | 10.41-34.29 [.41-1.35] | 103.63 [4.08] | 16-18 | 20-22 | 15-16 | 14-16 |
| | | 202D174 | 10.41-34.29 [.41-1.35] | 103.63 [4.08] | 16-18 | 20-22 | 15-16 | 14-16 |
| | | 202D185 | 20.83-53.34 [.82-2.10] | 165.10 [6.50] | — | — | 24 | 24 |
| | | 202D196 | 25.91-69.85 [1.02-2.75] | 177.80 [7.00] | — | — | — | — |
| | | 202K121 | 6.10-19.05 [.24-.75] | 38.10 [1.50] | — | 08 | 04-05 | 04-07 |
| | | 202K132 | 7.11-23.37 [.28-.92] | 54.86 [2.16] | 08 | 10 | 06-07 | 06-08 |
| | | 202K142 | 7.62-25.15 [.30-.99] | 66.80 [2.63] | 10 | 12-14 | 09-10 | 07-10 |
| | | 202K153 | 8.89-30.48 [.35-1.20] | 80.10 [3.15] | 12-14 | 16-18 | 11-14 | 10-12 |
| | | 202K163 | 10.41-34.29 [.41-1.35] | 103.63 [4.08] | 16-18 | 20-22 | 15-16 | 14-16 |
| | | 202K174 | 10.41-34.29 [.41-1.35] | 103.63 [4.08] | 16-18 | 20-22 | 15-16 | 14-16 |
| | | 202K185 | 20.83-53.34 [.82-2.10] | 165.10 [6.50] | — | — | 24 | 24 |
| Bulbous, 90° | 3,4,25 -12, -100 | 222D121 | 6.10-19.05 [.24-.75] | 21.34 [0.84] | | 08 | 04-05 | 04-07 |
| | | 222D132 | 7.11-23.37 [.28-.92] | 33.78 [1.33] | 08 | 10 | 06-07 | 05-08 |
| | | 222D142 | 7.62-25.15 [.30-.99] | 36.58 [1.44] | 10 | 12-14 | 09-10 | 08-10 |
| | | 222D153 | 8.89-30.48 [.35-1.20] | 43.69 [1.72] | 12-14 | 16-18 | 11-14 | 10-14 |
| | | 222D163 | 10.41-34.29 [.41-1.35] | 53.59 [2.11] | 16-18 | 20-22 | 15-16 | 14-18 |
| | | 222D174 | 16.26-44.96 [.64-1.77] | 77.98 [3.07] | 20-24 | 24 | 18-22 | 18-22 |
| | | 222D185 | 20.83-53.34 [.82-2.10] | 97.54 [3.84] | — | — | 24 | 24 |
| | | 222D196 | 25.91-69.85 [1.02-2.75] | 117.86 [4.64] | — | — | — | — |
| | | 222K121 | 6.10-19.05 [.24-.75] | 21.34 [0.84] | | 08 | 04-05 | 04-07 |
| | | 222K132 | 7.11-23.37 [.28-.92] | 33.78 [1.33] | 08 | 10 | 06-07 | 05-08 |
| | | 222K142 | 7.62-25.15 [.30-.99] | 36.58 [1.44] | 10 | 12-14 | 09-10 | 08-10 |
| | | 222K152 | 8.89-30.48 [.35-1.20] | 43.69 [1.72] | 12-14 | 16-18 | 11-14 | 10-14 |
| | | 222K163 | 10.41-34.29 [.41-1.35] | 53.59 [2.11] | 16-18 | 20-22 | 15-16 | 14-18 |
| | | 222K174 | 16.26-44.96 [.64-1.77] | 77.98 [3.07] | 20-24 | 24 | 18-22 | 18-22 |
| | | 222K185 | 20.83-53.34 [.82-2.10] | 97.54 [3.84] | — | — | 24 | 24 |



Dimensions are shown for reference purposes only. Specifications subject to change.

Dimensions are in millimeters unless otherwise specified.

USA: +1 800 522 6752
Asia Pacific: +86 0 400 820 6015
UK: +44 800 267 666

For additional support numbers please visit www.te.com

## Boot Adapter Selection Tables (Continued)

**Table 2. Determining when Shims should be used**

| Part No. | Cable Range Requiring Shim | Type of Shim |
|---|---|---|
| 202C611 * | 3.81-4.83 [.15-.19] | Tubing |
| 202C621 * | 6.35-8.13 [.25-.32] | Tubing |
| 202C632 * | 9.65-12.70 [.38-.50] | Tubing |
| 202C632 * | 3.30-9.65 [.13-.38] | 202E334 |
| 202C632 * | 14.48-17.53 [.57-.69] | Tubing |
| 202C642 * | 9.91-14.48 [.39-.57] | 202E346 |
| 202C642 * | 3.30-9.65 [.13-.38] | 202E344 |
| 202C642 * | 19.30-22.35 [.76-.88] | Tubing |
| 202C653 * | 9.91-19.30 [.39-.76] | 202E346 |
| 202C663 | 17.53-22.86 [.69-.90] | Tubing |
| 202D211/202F211 † | 5.08-6.60 [.20-.26] | Tubing |
| 222D211/222F211 † | 5.08-6.60 [.20-.26] | Tubing |
| 202D221/202F221 † | 5.84-7.62 [.23-.30] | Tubing |
| 222D221/222F221 † | 5.84-7.62 [.23-.30] | Tubing |
| 202D221/202F221 † | 5.92 [.233] | Tubing |
| 222D221/222F221 † | 5.92 [.233] | Tubing |
| 202D232/202F232 † | 6.86-8.89 [.27-.35] | Tubing |
| 222D232/222F232 † | 6.86-8.89 [.27-.35] | Tubing |
| 202D242/202F242 † | 7.87-10.16 [.31-.40] | Tubing |
| 222D242/222F242 † | 3.30-7.87 [.13-.31] | 202E334 |
| 202D253/202F253 † | 8.38-10.92 [.33-.43] | Tubing |
| 222D253/222F253 † | 3.30-8.38 [.13-.33] | 202E334 |
| 202D263/202F263 | 9.65-12.70 [.38-.50] | Tubing |
| 222D263/222F263 | 3.30-9.65 [.13-.38] | 202E334 |
| 202D274/202F274 | 11.43-14.99 [.45-.59] | Tubing |
| 222D274/222F274 | 9.91-11.43 [.39-.45] | 202E346 |
| 222D274/222F274 | 3.30-9.65 [.13-.38] | 202E344 |
| 222D274/222F274 | 13.46-17.53 [.53-.69] | Tubing |
| 222D285/222F285 | 9.91-13.46 [.39-.53] | 202E346 |
| 222D285/222F285 | 3.30-9.65 [.13-.38] | 202E344 |
| 222D1XD/222D1XX | — | Use tubing as a shim if necessary |

* These ranges also apply to the 202G6XX series of boots.
† These ranges also apply to the 202G2XX series of boots.





Catalog 1654025
Revised 3-13

www.te.com

Dimensions are shown for reference purposes only. Specifications subject to change.

Dimensions are in millimeters unless otherwise specified.

USA: +1 800 522 6752
Asia Pacific: +86 0 400 820 6015
UK: +44 800 267 666

For additional support numbers please visit www.te.com

## Material Selection Table

### Applications

TE offers Raychem brand products in a variety of materials to enable designers and material specifiers to obtain optimum performance.

| Material* | Characteristics |
|---|---|
| -3 Molded Part Material | A general purpose, heat-shrinkable semi rigid and flame retarded polyolefin molding compound with good resistance to fluids and heat. -3 molded parts are ideal for use in applications where toughness combined with resistance to occasional exposure to fluids or heat is required. -3 molded parts are recommended for use in System 10. |
| -3S Molded Part Material | A general purpose, heat-shrinkable flame retarded, polyolefin compound used to make shielded molded parts.-3S molded parts form part of the Rayaten shielding system and are ideal for use in applications where toughness combined with resistance to occasional exposure to fluids or heat is required. -3S molded parts are recommended for use in System 10. |
| -4 Molded Part Material | A general purpose, heat-shrinkable flexible and flame retarded polyolefin molding compound with good resistance to fluids and heat. -4 molded parts are ideal for use in applications where toughness combined with resistance to occasional exposure to fluids or heat is required. -4 molded parts are recommended for use in System 10. |
| -6 Molded Part Material | Designed for use in applications where extreme flexibility is required. The parts provide excellent strain relief and sealing over a broad temperature range and remain flexible at very low temperatures. The standard color is black. |
| -8 Molded Part Material | For use in outer space, where use of low outgassing components is required. The parts provide excellent strain relief at connector cable terminations. Please contact TE for available shapes. The standard color is black. |
| -12 Molded Part Material | A high temperature, heat-shrinkable, flexible, flame retarded, fluoroelastomeric molding compound with excellent resistance to long term fluid immersion and heat exposure. A wide range of shapes are available in this material. -12 molded parts are recommended for use in System 200. |
| -25 Molded Part Material | A heat-shrinkable, semi rigid, fluid and temperature resistant, elastomeric molding compound, designed to offer excellent performance in harsh environments. Ideal for use in military vehicles where high temperatures and long term exposure to hot fluids is expected. A wide range of shapes are available in this material. -25 molded parts are recommended for use in System 25. |
| -25S Molded Part Material | A heat-shrinkable, semi rigid, fluid and temperature resistant, elastomeric compound, used to make shielded molded parts. -25S molded parts form part of the Rayaten shielding system and are ideal for use in military vehicles where high temperatures and long term exposure to hot fluids is expected. -25S molded parts are recommended for use in System 25. |
| -50 Molded Part Material | A heat-shrinkable, highly flexible, fluid and temperature resistant, VPB molding compound, ideal for use in general purpose and high temperature military applications where exposure to petroleum based solvents is expected. Uniboots and a wide range of low profile shapes are available in this material. -50 molded parts are recommended for use in System 30. |
| -51 Molded Part Material | A heat-shrinkable, rugged, flexible, fluid and temperature resistant, EPB molding compound, ideal for use in general purpose applications where exposure to petroleum based solvents is expected. Uniboots and a wide range of low profile shapes are available in this material. -51 molded parts are recommended for use in System 20. |
| -55 Molded Part Material | A heat-shrinkable, flexible, flame retarded, fluid and high temperature resistant, modified fluoropolymer molding compound. A wide range of shapes is available. -55 molded parts are recommended for use in System 300. |
| -71 Molded Part Material | A heat-shrinkable, flexible, fluid and temperature resistant, polyolefin molding compound, ideal for use in general purpose applications where a good balance of fluid and heat resistance properties is required. Uniboots and a wide range of low profile shapes are available. -71 molded parts are suitable for use in System 10. |
| -100 Molded Part Material | A heat-shrinkable, semi flexible, low fire hazard molding compound designed to offer excellent fire safety characteristics combined with low smoke and low acid gas emission -100 also exhibits good mechanical and fluid resistance properties. A wide range of shapes are available in this material. -100 molded parts are recommended for use in System 100. |
| -100S Molded Part Material | A heat-shrinkable, semi flexible, low fire hazard compound used to make shielded molded parts. 100S molded parts form part of the Rayaten shielding system and are designed to offer excellent fire safety characteristics combined with low smoke and low acid gas emission. -100S also exhibits good mechanical and fluid resistance properties. -100S molded parts are recommended for use in System 100. |
| -125 Molded Part Material | A heat-shrinkable, flame retarded, fluid and high temperature resistant, modified fluoropolymer molding compound. A range of shapes are available. -125 molded parts are recommended for use in System 300. |
| -130 Molded Part Material | Non flame-retarded molded material. Low shrink temperature. |
| -770 Molded Part Material | NBCCS resistant material rated to 125˚C, Part of System 770. |
| -780 Molded Part Material | NBCCS resistant material rated to 175˚C, Part of System 780. |
| -790 Molded Part Material | NBCCS resistant material rated to 200˚C, Part of System 790. |

*Check with specific part page for applicable materials.

## -3

### Semi-Rigid Modified Polyolefin

### Product Facts

- Heat-shrinkable
- Semi-Rigid
- Flame Retardant
- Good resistance to fluids and heat

### Applications

TE molded parts in -3 material are designed for use in general harnessing applications where toughness is required and systems are occasionally exposed to fluids or heat. The adhesive-lined parts provide excellent sealing and strain relief at connector-cable terminations and transitions. A wide range of shapes are available in this material. The standard color is black.

### Installation

-3 molded parts will shrink on the application of heat above 125°C [257°F].

Recommended installation temperature: 150°C [302°F]

### Operating Temperature Range

-55°C to 135°C
[-67°F to 275°F]

| Available in: | Americas | Europe | Asia Pacific |
|---|---|---|---|
| | ■ | ■ | ■ |





Catalog 1654025
Revised 3-13

www.te.com

Dimensions are shown for reference purposes only. Specifications subject to change.

Dimensions are in millimeters unless otherwise specified.

USA: +1 800 522 6752
Asia Pacific: +86 0 400 820 6015
UK: +44 800 267 666

For additional support numbers please visit www.te.com

**-3** (Continued)

## Specifications/Approvals

| UL | Military | TE |
|---|---|---|
| 224, File E85381 | SAE-AS81765/1, Type I<br>Def. Stan. 59-97 Issue 3 Type DA (Europe)<br>BS-G-198-5-DA (Europe) | RT-301 |
| — | SAE-AS85049/ 140, 141, 142<br>(material designator A) | — |

## Product Characteristics

| | | Specification Requirements | Test Method |
|---|---|---|---|
| Physical | Tensile strength | 10.5 MPa (min.) | ISO 37; ASTM D 412 |
| | Ultimate elongation | 250% (min.) | ISO 37; ASTM D 412 |
| | 2% secant modulus | 80–160 MPa | ASTM D 882 |
| | Specific gravity | 1.4 (max.) | ISO 1183; ASTM D 792 |
| Thermal | Heat aging for 168 h at 175°C [347°F] | Ultimate elongation 150% (min.) | ISO 188, ISO 37 |
| | Heat shock for 4 h at 225°C [437°F] | No dripping, cracking, or flowing | ASTM D 2671 |
| | Low-temperature flex at -55°C [-67°F] | No cracking during mandrel bend | RK-6703, CL 2.7: RT-301 Sec. 4.3.4 |
| | Flammability | Self-extinguishing | RK-6703, CL 2.8: ASTM D 635 |
| Electrical | Electric strength | 8 MV/m (min.) | IEC 243 |
| Water absorption | — | 0.5% (max.) | ISO 62 |
| Fluid resistance | Aviation fuel F40 | Tensile strength 8.5 MPa (min.)<br>Ultimate elongation 200% (min.) | ISO 1817 and ISO 37<br>after immersion for 24 h at 23°C [73°F] |
| | Lubricating oil O-149 | Tensile strength 8.5 MPa (min.)<br>Ultimate elongation 200% (min.) | ISO 1817 and ISO 37<br>after immersion for 24 h at 23°C [73°F] |
| | Phosphate ester hydraulic fluid (DTD 900/4881A) | Tensile strength 8.5 MPa (min.)<br>Ultimate elongation 200% (min.) | ISO 1817 and ISO 37<br>after immersion for 24 h at 23°C [73°F] |



Dimensions are shown for reference purposes only. Specifications subject to change.

Dimensions are in millimeters unless otherwise specified.

USA: +1 800 522 6752
Asia Pacific: +86 0 400 820 6015
UK: +44 800 267 666

For additional support numbers please visit www.te.com

## -4

### Flexible Polyolefin

### Product Facts

- Heat-shrinkable
- Flexible
- Flame Retardant
- Good resistance to fluids and heat

### Applications

TE molded parts in -4 material are designed for use in general harnessing applications where toughness is required and systems are occasionally exposed tofluids or heat. The adhesive-lined parts provide excellent sealing and strain relief at connector-cable terminations and transitions.

A wide range of shapes are available in this material. The standard color is black.

### Installation

-4 molded parts will shrink on the application of heat above 100°C [212°F].

Recommended installation temperature: 150°C [302°F]

### Operating Temperature Range

-55°C to 135°C
[-67°F to 275°F]

| Available in: | Americas | Europe | Asia Pacific |
|---|---|---|---|
| | ■ | ■ | ■ |





Catalog 1654025
Revised 3-13

www.te.com

Dimensions are shown for reference purposes only. Specifications subject to change.

Dimensions are in millimeters unless otherwise specified.

USA: +1 800 522 6752
Asia Pacific: +86 0 400 820 6015
UK: +44 800 267 666

For additional support numbers please visit www.te.com

**-4** (Continued)

## Specifications/Approvals

| UL | Military | TE |
|---|---|---|
| 224, File E85381 | SAE-AS81765/1, Type II | RT-1304 |
| — | SAE-AS85049/ 140, 141, 142 (material designator B) | — |

## Product Characteristics

| | | Specification Requirements | Test Method |
|---|---|---|---|
| Physical | Tensile strength | 1800 psi (min.) | ASTM D 412 |
| | Ultimate elongation | 400% (min.) | ASTM D 412 |
| | Specific gravity | 1.3 (max.) | ASTM D 792 |
| Thermal | Heat aging for 168 h at 175°C [347°F] | Ultimate elongation 300% (min.) | RT 1304 Sec. 4.3.3 |
| | Heat shock for 4 h at 225°C [437°F] | No dripping, flowing, or cracking | RT 1304 Sec. 4.3.5 |
| | Low-temperature flex at -55°C [-67°F] | No cracking | RT 1304 Sec. 4.3.4 |
| | Flammability (burn time) | Average flame time: 120 s (max.) | ASTM D 635 |
| Electrical | Dielectric strength | 350 V/mil (min.) | ASTM D 149 |
| Water absorption | — | 0.3% (max.) | ASTM D 570 |
| Fluid resistance | JP-4 fuel, aviation gasoline, water, hydraulic fluid | Tensile strength 8.5 MPa psi (min.)<br>Ultimate elongation 200% (min.) | RT-1304 Sec. 4.3.3 |

## -12

### Modified Fluoroelastomer

### Product Facts

- **Heat-shrinkable, flexible, fluid-resistant modified fluoro-elastomer**
- **Excellent resistance to long-term fuel immersion**

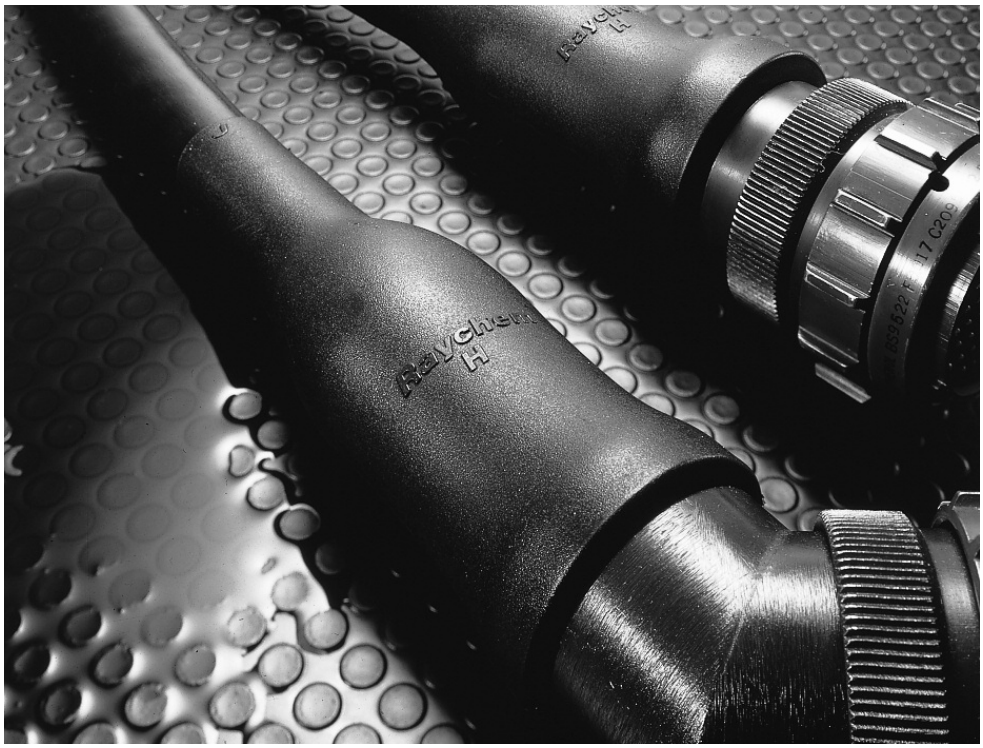


**Applications**

TE -12 molded parts with fluoroelastomers are designed to be used in conjunction with tubing made from fluoroelastomers or multi-conductor cable jackets and a suitable adhesive in System 200.

This system provides excellent resistance to elevated temperatures and continuous fuel immersion. Available in a wide range of configurations, -12 molded parts will operate from -55°C [-67°F] to 200°C [392°F]. The standard color is black.

**Installation**

-12 molded parts will shrink on the application of heat above 175°C [347°F].

Recommended installation temperature: 220°C [428°F]

**Operating Temperature Range**

-55°C to 200°C
[-67°F to 392°F]

| Available in: | Americas | Europe | Asia Pacific |
|---|---|---|---|
| | ■ | ■ | ■ |





Catalog 1654025
Revised 3-13

www.te.com

Dimensions are shown for reference purposes only. Specifications subject to change.

Dimensions are in millimeters unless otherwise specified.

USA: +1 800 522 6752
Asia Pacific: +86 0 400 820 6015
UK: +44 800 267 666

For additional support numbers please visit www.te.com

**-12** (Continued)

## Specifications/Approvals

| Military | TE |
|---|---|
| SAE-AS81765/4 | RT-1312 |
| Def. Stan. 59-97 Issue 3 Type DD (Europe) | — |
| BS-G-198-5-DD-P (Europe) | — |
| SAE-AS85049/ 140, 141, 142 (material designator D) | — |

## Product Characteristics

| | | Specification Requirements | Test Method |
|---|---|---|---|
| Physical | Tensile strength | 12.4 MPa (min.) | ISO 37 |
| | Ultimate elongation | 300% (min.) | ISO 37 |
| | 2% secant modulus | 70 MPa (max.) | ASTM D 882 |
| | Specific gravity | 1.95 (max.) | ISO 1183 |
| Thermal | Heat aging for 168 h at 250°C [482°F] | Ultimate elongation 250% (min.) | ISO 188, ISO 37 |
| | Heat shock for 4 h at 300°C [572°F] | No dripping, cracking, or flowing | ASTM D 2671 |
| | Low temperature flex at -55°C [-67°F] | No cracking | ASTM D 2671 |
| | Flammability (burn time) | 30 s (max.) | ASTM D 635 |
| Electrical | Electric strength | 8 MV/m (min). | IEC 243 |
| Water absorption | — | 0.5% (max.) | ISO 62 |
| Fluid resistance | Aviation fuel F40 | Tensile strength 11 MPa (min.)<br>Ultimate elongation 200% (min.) | ISO 1817<br>after immersion for 24 h at 23°C [73°F] |
| | Lubricating oil O-149 | Tensile strength 11 MPa (min.)<br>Ultimate elongation 200% (min.) | ISO 1817<br>after immersion for 24 h at 93°C [200°F] |
| | Hydraulic fluid H515 | Tensile strength 11 MPa (min.)<br>Ultimate elongation 200% (min.) | ISO 1817<br>after immersion for 24 h at 93°C [200°F] |



Dimensions are shown for reference purposes only. Specifications subject to change.

Dimensions are in millimeters unless otherwise specified.

USA: +1 800 522 6752
Asia Pacific: +86 0 400 820 6015
UK: +44 800 267 666

For additional support numbers please visit www.te.com

## -25

### Fluid-Resistant Modified Elastomer

### Product Facts

- **Heat-shrinkable, semi-rigid, chemical- and abrasion-resistant molded shapes**
- **Excellent resistance to high-temperature fluids**
- **Resistance to long-term exposure at elevated temperatures**

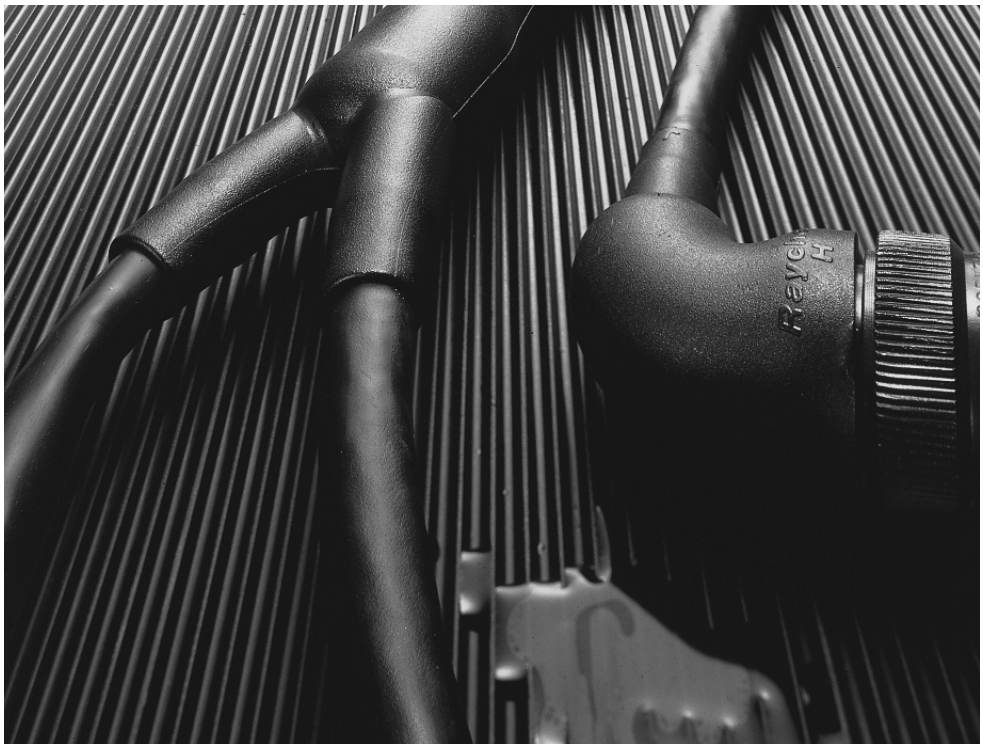

### Applications

TE heat-shrinkable molded parts in -25 material are designed to be used in conjunction with other System 25 components such as DR-25 tubing and S1125 adhesive, providing a complete cable harness system capability.

-25 parts have been specifically formulated and designed to provide optimum high-temperature fluid resistance and long-term heat resistance. This unique balance of properties makes -25 parts particularly suitable for sealing and strain relief at connector-cable terminations and cable-to-cable transitions on military vehicle cables and harnesses. Available in a wide range of configurations, -25 parts will operate from -75°C to 150°C [-103°F to 302°F] for long periods. The standard color is black.

### Installation

-25 molded parts will shrink on the application of heat above 135°C [275°F].

Recommended installation temperature: 175°C [347°F]

### Operating Temperature Range

-75°C to 150°C
[-103°F to 302°F]

| Available in: | Americas | Europe | Asia Pacific |
|---|---|---|---|
| | ■ | ■ | ■ |





Catalog 1654025
Revised 3-13

www.te.com

Dimensions are shown for reference purposes only. Specifications subject to change.

Dimensions are in millimeters unless otherwise specified.

USA: +1 800 522 6752
Asia Pacific: +86 0 400 820 6015
UK: +44 800 267 666

For additional support numbers please visit www.te.com

## -25 (Continued)

### Specifications/Approvals

| Military | TE |
|---|---|
| VG95343 Parts 6, 7, 8 and 9 (Europe) | RW-2070 |
| Def Stan 59-97, Issue 3, Type DE (Europe) | — |
| BSG-198-5-DE-P | — |
| SAE-AS85049/ 140, 141, 142 (material designator H) | — |

### Product Characteristics

| | | Specification Requirements | Test Method |
|---|---|---|---|
| Physical | Tensile strength | 15 MPa (min.) | ASTM D 412 |
| | Ultimate elongation | 350% (min.) | ASTM D 412 |
| | Specific gravity | 1.5 (max.) | ASTM D 792 |
| Thermal | Heat aging for 168 h at 150°C [302°F | Ultimate elongation 300% (min.) | ASTM D 412 |
| | Heat shock for 4 h at 225°C [437°F] | No dripping, cracking, or flowing | ASTM D 2671 |
| | Low-temperature flex for 4 h at -70°C [-94°F] | No cracking during mandrel bend | ASTM D 2671 |
| | Flammability (burn time) | 120 s (max.) | ASTM D 635 |
| Electrical | Electric strength | 8 MV/m | ASTM D 149 |
| Fluid resistance | Aviation fuel JP-4 (MIL-T-5624) | Tensile strength 12 MPa (min.) Ultimate elongation 300% (min.) | ASTM D 412 after immersion for 24 h at 25°C [77°F] |
| | Hydraulic fluid (MIL-H-6083) | Tensile strength 12 MPa (min.) Ultimate elongation 300% (min.) | ASTM D 412 after immersion for 24 h at 25°C [77°F] |
| | Diesel fuel (VV-F-800 No 2) | Tensile strength 12 MPa (min.) Ultimate elongation 300% (min.) | ASTM D 412 after immersion for 24 h at 50°C [122°F] |
| | Automotive gasoline (MIL-G-3056) | Tensile strength 12 MPa (min.) Ultimate elongation 300% (min.) | ASTM D 412 after immersion for 24 h at 25°C [77°F] |



Dimensions are shown for reference purposes only. Specifications subject to change.

Dimensions are in millimeters unless otherwise specified.

USA: +1 800 522 6752
Asia Pacific: +86 0 400 820 6015
UK: +44 800 267 666

For additional support numbers please visit www.te.com

## -25S

### Fluid-Resistant Screened Elastomer

### Product Facts

- Fuel and heat resistance
- RFI, EMI protection

### Applications

Rayaten screened molded parts in -25S material are designed for use with FDR-25 or DR-25 jacketed screened multiconductor cable and S1125 adhesive to provide a complete high-performance harness system offering high levels of RFI and EMI protection. This -25 material provides optimum high-temperature fluid-resistance and long-term heat-aging properties. The material is particularly suitable for providing encapsulation, mechanical protection, and strain relief on terminations and cable transitions in harsh environments.The standard color is black. Products made from this material are normally used in an assembly (see section 7).

### Operating Temperature Range

-55°C to 150°C
[-67°F to 302°F]

| Available in: | Americas | Europe | Asia Pacific |
|---|---|---|---|
| | ■ | ■ | ■ |





Catalog 1654025
Revised 3-13

www.te.com

Dimensions are shown for reference purposes only. Specifications subject to change.

Dimensions are in millimeters unless otherwise specified.

USA: +1 800 522 6752
Asia Pacific: +86 0 400 820 6015
UK: +44 800 267 666

For additional support numbers please visit www.te.com

## -25S (Continued)

### Specifications/Approvals

| Military | TE |
|---|---|
| VG 95343 Pt. 20, Pt. 22 | RW-2077 |

### Product Characteristics

| | | Specification Requirements* | Screening effectiveness in dB at 3 KHz to 30 MHz (min.) | Screening effectiveness in dB at >30 MHz to 100 MHz (min.) |
|---|---|---|---|---|
| Initial values | | Tensile strength: 12 MPa (min.) | — | — |
| | | Ultimate elongation: 400% (min.) | — | — |
| | | Metal adhesion: 15 N/cm (min.) | — | — |
| | | Shielding effectiveness | 75 | 70 |
| Thermal | Heat shock (1/2 h at 200°C [392°F]) | Tensile strength: 12 MPa (min.) | — | — |
| | | Ultimate elongation: 400% (min.) | — | — |
| | | Shielding effectiveness | 75 | 70 |
| | Heat aging (168 h at 160°C [320°F]) | Tensile strength: 12 MPa (min.) | — | — |
| | | Ultimate elongation: 400% (min.) | — | — |
| | | Shielding effectiveness | 75 | 70 |
| | 3 thermal cycles of -75°C to 150°C [-103°F to 302°F] | Shielding effectiveness | 75 | 70 |
| Immersion in the following fluids for 24 h: | | | | |
| Chemical | Lubricating oil (O-156, at 100°C [212°F]) | Tensile strength: 10 MPa (min.) | — | — |
| | | Ultimate elongation: 300% (min.) | — | — |
| | | Shielding effectiveness | 75 | 70 |
| | Hydraulic fluid H515, at 50°C [122°F] | Tensile strength: 10 MPa (min.) | — | — |
| | | Ultimate elongation: 300% (min.) | — | — |
| | | Shielding effectiveness | 75 | 70 |
| | Aviation fuel JP4 F40, at 23°C [73°F] | Tensile strength: 10 MPa (min.) | — | — |
| | | Ultimate elongation: 300% (min.) | — | — |
| | | Shielding effectiveness | 75 | 70 |
| | Diesel fuel F54, at 23°C [73°F] | Tensile strength: 10 MPa (min.) | — | — |
| | | Ultimate elongation: 300% (min.) | — | — |
| | | Shielding effectiveness | 75 | 70 |
| | 1, 1, 1, trichloroethane (1 h, at 23°C [73°F]) | Tensile strength: 10 MPa (min.) | — | — |
| | | Ultimate elongation: 300% (min.) | — | — |
| | | Shielding effectiveness | 75 | 70 |

*Values quoted are for the polymer/metal composite in all cases when terminated using epoxy adhesives.

## -50

### Fluid-Resistant Modified Elastomer

### Product Facts

- Excellent heat and fluid resistance
- Low profile
- Rugged
- Lightweight

### Applications

A high-performance blend of fluoroelastomers and other polymers, TE -50 material offers excellent fluid and temperature resistance. It is suitable for use in most areas of military vehicle harnessing. This material is available in the Uniboot shape and should be chosen in applications that use System 30 components. The standard color is black.

### Installation

-50 molded parts will shrink on the application of heat above 150°C [302°F].

Recommended installation temperature is 175°C [347°F]

### Operating Temperature Range

-55°C to 150°C
[-67°F to 302°F]

| Available in: | Americas | Europe | Asia Pacific |
|---|---|---|---|
| | ■ | ■ | ■ |





Catalog 1654025
Revised 3-13

www.te.com

Dimensions are shown for reference purposes only. Specifications subject to change.

Dimensions are in millimeters unless otherwise specified.

USA: +1 800 522 6752
Asia Pacific: +86 0 400 820 6015
UK: +44 800 267 666

For additional support numbers please visit www.te.com

**-50** (Continued)

## Specifications/Approvals

| Specification | TE |
|---|---|
| SC-X-15111 (U.S.) | RT-1313 |

## Product Characteristics

| | | Specification Requirements | Test Method |
|---|---|---|---|
| Physical | Tensile strength | 15 MPa (min.) | ASTM D 412 |
| | Ultimate elongation | 350% (min.) | ASTM D 412 |
| | Specific gravity | 1.5 (max.) | ASTM D 792 |
| Thermal | Heat aging for 168 h at 150°C [302°F] | Ultimate elongation 300% (min.) | ASTM D 412 |
| | Heat shock for 4 h at 225°C [437°F] | No dripping, cracking, or flowing | ASTM D 2671 |
| | Low-temperature flex for 4 h at -70°C [-94°F] | No cracking during mandrel bend | ASTM D 2671 |
| | Flammability (burn time) | 120 s (max.) | ASTM D 635 |
| Electrical | Electric strength | 8 MV/m | ASTM D 149 |
| Fluid resistance | Aviation fuel JP-4 (MIL-T-5624) | Tensile strength 12 MPa (min.) Ultimate elongation 300% (min.) | ASTM D 412 after immersion for 24 h at 25°C [77°F] |
| | Hydraulic fluid (MIL-H-6083) | Tensile strength 12 MPa (min.) Ultimate elongation 300% (min.) | ASTM D 412 after immersion for 24 h at 25°C [77°F] |
| | Diesel fuel (VV-F-800 No 2) | Tensile strength 12 MPa (min.) Ultimate elongation 300% (min.) | ASTM D 412 after immersion for 24 h at 50°C [122°F] |
| | Automotive gasoline (MIL-G-3056) | Tensile strength 12 MPa (min.) Ultimate elongation 300% (min.) | ASTM D 412 after immersion for 24 h at 25°C [77°F] |

## -51

### Chemical-Resistant Fluoroelastomer

### Product Facts

- Excellent fuel resistance
- Low profile
- Rugged
- Lightweight

### Applications

A high-performance elastomeric blend of polymers, TE -51 material offers excellent fluid resistance.

It is suitable for use in most areas of military vehicle harnessing. This material is available in the Uniboot range and other slimline boots and transitions. The standard color is black.

### Installation

-51 molded parts will shrink on the application of heat above 135°C [275°F].

Recommended installation temperature is 150°C [302°F]

### Operating Temperature Range

-55°C to 135°C
[-67°F to 275°F]

| Available in: | Americas | Europe | Asia Pacific |
|---|---|---|---|
| | ■ | ■ | ■ |





Catalog 1654025
Revised 3-13

www.te.com

Dimensions are shown for reference purposes only. Specifications subject to change.

Dimensions are in millimeters unless otherwise specified.

USA: +1 800 522 6752
Asia Pacific: +86 0 400 820 6015
UK: +44 800 267 666

For additional support numbers please visit www.te.com

**-51** (Continued)

## Specifications/Approvals

| Specification | TE |
|---|---|
| SC-X-15112 (U.S.) | RT-1321 |

## Product Characteristics

| | | Specification Requirements | Test Method |
|---|---|---|---|
| Physical | Tensile strength | 1500 psi (min.) | ASTM D 412 |
| | Ultimate elongation | 300% (min.) | ASTM D 412 |
| | Specific gravity | 1.6 (max.) | ASTM D 792 |
| Thermal | Heat aging for 168 h at 121°C [250°F] | Tensile strength 1200 psi. (min.)<br>Elongation 250% (min.) | RT-1321 Sec. 4.3.3<br>RT-1321 Sec. 4.3.3 |
| | Heat shock for 4 h at 200°C [392°F] | No dripping, flowing, or cracking | RT-1321 Sec. 4.3.5 |
| | Low-temperature flex for 4 h at -55°C [-67°F] | No cracking | RT-1321 Sec. 4.3.4 |
| | Flammability (burn time) | 120 seconds, 1 inch (max.) | ASTM D 635 |
| Electrical | Dielectric strength | 200 V/mil (min.) | ASTM D 149 |
| Fluid resistance | Lubricating oil, diesel oil, water for 24 h at 25°C [77°F] | Tensile strength 1000 psi (min.)<br>Elongation 225% (min.)<br>Weight increase 10% (max.) | RT-1321 Sec. 4.3.3 and 4.3.7 |
| | Gasoline for 24 h at 25°C [77°F] | Tensile strength 800 psi (min.)<br>Elongation 225% (min.)<br>Weight increase 25% (max.) | RT-1321 Sec. 4.3.3 and 4.3.7 |
| | Isopropyl alcohol, cleaning fluid for 24 h at 25°C 77°F] | Tensile strength 1400 psi (min.)<br>Elongation 225% (min.)<br>Weight increase 10% (max.) | RT-1321 Sec. 4.3.3 and 4.3.7 |
| | Hydraulic fluid for 24 h at 71°C [160°F] | Tensile strength 1000 psi (min.)<br>Elongation 225% (min.)<br>Weight increase 25% (max.) | RT-1321 Sec. 4.3.3 and 4.3.7 |

## -55

### Flexible Fluoropolymer

### Product Facts

- **Flame retardant**
- **Abrasion and cut through resistance**
- **Flexible**
- **High temperature resistance**
- **High fluid resistance**
- **Environmentally sealed**

### Applications

A heat-shrinkable, flexible, flame retardant, fluid and high temperature resistant, modified fluoropolymer molding compound. -55 molded parts are ideal for use in applications where chemical resistance and abrasion resistance is required. A wide range of shapes are available. -55 molded parts are recommended for use in System 300.

Use the System 300 family of parts in military and industrial applications where excellent high temperature performance and good physical and chemical properties are a requirement.

System 300 jacketing is based on a modified fluoropolymer and features a one part epoxy adhesive in tape form.

### Installation

This specification covers the requirements for one type of flexible, electrical insulating molded component whose expanded dimensions will reduce to a predetermined size upon the application of heat in excess of 220°C [428°F].

### Operating Temperature Range

-65°C to 200°C
[-85°f to 392°F]

### Specifications/Approvals

RT-1330

### Product Characteristics

| | | | | |
|---|---|---|---|---|
| Physical | Tensile Strength | psi (MPa) | 3500 minimum (24.1) | Section 4.3.3 |
| | Ultimate Elongation | percent | 200 minimum | ASTM D 2671 |
| | Specific Gravity | — | 2.0 maximum | ASTM D 792 |
| | Low Temperature Flexibility<br>4 hours at -65 ± 2°C [-85 ± 4°F] | — | No cracking | Section 4.3.4 |
| | Heat Shock<br>4 hours at 300°C [572°F] | — | No dripping, flowing or cracking | Section 4.3.5 |
| | Heat Resistance<br>336 hours at 250°C [482°F] | — | — | Section 4.3.6 |
| | Followed by tests for:<br>Tensile Strength<br>Elongation | <br>psi (MPa)<br>percent | <br>2000 minimum (13.8)<br>150 minimum | <br>Section 4.3.3<br>ASTM D 2671 |

| Available in: | Americas | Europe | Asia Pacific |
|---|---|---|---|
| | ■ | ■ | ■ |





Catalog 1654025
Revised 3-13

www.te.com

Dimensions are shown for reference purposes only. Specifications subject to change.

Dimensions are in millimeters unless otherwise specified.

USA: +1 800 522 6752
Asia Pacific: +86 0 400 820 6015
UK: +44 800 267 666

For additional support numbers please visit www.te.com

## -55 (Continued)

### Product Characteristics
(Continued)

| | | | |
|---|---|---|---|
| **Electrical** | | | |
| Dielectric Strength | volts/mil | 200 minimum | ASTM D 149 |
| Volume Resistivity | ohm-cm | 1011 minimum | ASTM D 257 |
| **Chemical** | | | |
| Corrosive Effect<br>16 hours at 200 ± 3°C [392 ± 5°F] | — | Noncorrosive | Section 4.3.7<br>ASTM D 2671<br>Procedure A |
| Flammability<br>Average Time of Burning<br>Average Extent of Burning | <br>seconds<br>inches (mm) | <br>15 maximum<br>0.5 maximum (12.5) | ASTM D 635 |
| Fungus Resistance | — | Rating of 1 or less | ASTM G 21 |
| Water Absorption<br>24 hours at 23 ± 3°C [73 ± 5°F)] | percent | 0.5 maximum | ASTM D 570 |
| Fluid Resistance<br>24 hours at 23 ± 3°C [73 ± 5°F] in:<br>Gasoline, Aviation Grade 100<br>(ASTM D 910)<br>1,1,1 Trichloroethane<br>(MIL-T-81533)<br>Coolanol 25<br>Followed by tests for:<br>Tensile Strength<br>Ultimate Elongation<br>24 hours at 50 ± 3°C [122 ± 5°F] in:<br>JP-5 (MIL-T-5624)<br>Deicing Fluid (MIL-A-8243)<br>Cleaning Compound<br>(MIL-C-43616)<br>5% Salt Solution (O-S-1926)<br>Fuel Oil, Diesel (VV-F-800, DF-2)<br>Followed by tests for:<br>Tensile Strength<br>Ultimate Elongation<br>24 hours at 75 ± 3°C [167 ± 5°F] in:<br>Hydraulic Fluid (MIL-H-5606)<br>Skydrol® 500<br>Lubricating Oil (MIL-L-2104)<br>Lubricating Oil (MIL-L-7808)<br>Followed by tests for:<br>Tensile Strength<br>Ultimate Elongation | —<br><br><br><br><br><br><br><br>psi (MPa)<br>percent<br><br><br><br><br><br><br><br><br>psi (MPa)<br>percent<br>—<br><br><br><br><br><br>psi (MPa)<br>percent | —<br><br><br><br><br><br><br><br>3000 minimum (20.7)<br>150 minimum<br><br><br><br><br><br><br><br><br>3000 minimum (20.7)<br>150 minimum<br>—<br><br><br><br><br><br>3000 minimum (20.7)<br>150 minimum | Section 4.3.8<br><br><br><br><br><br><br><br>Section 4.3.3<br>ASTM D 2671<br><br><br><br><br><br><br><br><br>Section 4.3.3<br>ASTM D 2671<br>Section 4.3.8<br><br><br><br><br><br>Section 4,3.3<br>ASTM D 2671 |
| Fluid Resistance<br>5 hours at 23 ± 3°C [73± 5°F]<br>Tensile Strength<br>Ultimate Elongation | —<br><br>psi (MPa)<br>Percent | —<br><br>3500 minimum (24.1)<br>150 minimum | Section 4.3.8<br><br>Section 4.3.3<br>ASTM D 2671 |
| **Nuclear** | | | Section 4.3.9 |
| Radiation Resistance<br>Followed by tests for:<br>Tensile Strength<br>Ultimate Elongation | <br><br>psi (MPa)<br>percent | <br><br>3500 minimum (24.1)<br>150 minimum | — |

## -71

### Semirigid Modified Polyolefin

### Product Facts

- Flexible
- Flame-retardant

### Applications

TE -71 material is a flexible, flame-retardant polyolefin suitable for use in general harnessing applications. The material is very flexible and offers a good balance of fluid and heat resistance. If Uniboot molded parts are required, -71 should be chosen as a replacement for -4. The standard color is black.

### Installation

-71 molded parts will shrink on the application of heat above 125°C [257°F].

Recommended installation temperature is 150°C [302°F]

### Operating Temperature Range

-55°C to 135°C
-67°F to 275°F]

| Available in: | Americas | Europe | Asia Pacific |
|---|---|---|---|
| | ■ | ■ | ■ |





Catalog 1654025
Revised 3-13

www.te.com

Dimensions are shown for reference purposes only. Specifications subject to change.

Dimensions are in millimeters unless otherwise specified.

USA: +1 800 522 6752
Asia Pacific: +86 0 400 820 6015
UK: +44 800 267 666

For additional support numbers please visit www.te.com

**-71** (Continued)

## Specifications/Approvals

| Military | TE |
|---|---|
| SAE-AS81765/1, Type II | RT-1316 |

## Product Characteristics

| | | Specification Requirements | Test Method |
|---|---|---|---|
| Physical | Tensile strength | 10 MPa (min.) | ASTM D 412 |
| | Ultimate elongation | 250% (min.) | ASTM D 412 |
| | Specific gravity | 1.40 (max.) | ASTM D 792 |
| Thermal | Heat aging for 168 hr at 175°C [347°F] | Ultimate elongation 200% (min.) | ASTM D 412 |
| | Heat shock for 4 h at 250°C [482°F] | No dripping, cracking, or flowing | ASTM D 2671 |
| | Low-temperature flex for 4 h at -55°C [-67°F] | No cracking during mandrel bend | ASTM D 2671 |
| | Flammability (burn time) | 90 s (max.) | ASTM D 635 |
| Electrical | Electric strength | 8 MV/m | ASTM D 149 |
| Water absorption | — | 0.5% (max.) | ASTM D 570 |
| Fluid resistance | Aviation fuel JP-4 (MIL-T-5624) | Tensile strength 5 MPa (min.) Ultimate elongation 200% (min.) | ASTM D 412 after immersion for 24 h at 25°C [77°F] |
| | Lubricating oil O-149 (MIL-L-7808) | Tensile strength 5 MPa (min.) Ultimate elongation 200% (min.) | ASTM D 412 after immersion for 24 h at 25°C [77°F] |
| | Hydraulic fluid (MIL-H-5606) | Tensile strength 5 MPa (min.) Ultimate elongation 200% (min.) | ASTM D 412 after immersion for 24 h at 25°C [77°F] |
| | Skydrol® 500 | Tensile strength 5 MPa (min.) Ultimate elongation 200% (min.) | ASTM D 412 after immersion for 24 h at 25°C [77°F] |

## -100

### Low-Fire-Hazard Material

### Product Facts

- **Heat-shrinkable, semiflexible molded shapes for low fire hazard applications**
- **Low-smoke index as defined by BS G 198 Part 5**
- **Low-toxicity index as defined by NES 713**
- **High-temperature index as defined by ISO 4589-3**

### Applications

TE heat-shrinkable molded parts in -100 material form part of System 100. The molded parts are designed for use in conjunction with Zerohal cable and tubing for applications where hazard reduction in the event of fire is crucial. The material exhibits excellent fire safety characteristics combined with low-smoke and low-acid-gas emission while retaining good mechanical and fluid-resistant properties. -100 parts with adhesive lining provide location, sealing, and strain relief of cable-connector terminations and cable–cable transitions on harnesses used where there is a need to lower the risk (such as in marine applications, mass transit systems, and offshore installations), or where equipment would be irreparably damaged by the corrosive products of combustion. Available in a wide range of configurations, -100 parts will operate continuously from -30°C to 105°C [-22°F to 221°F]. The standard color is black.

### Installation

-100 molded parts will shrink on the application of heat above 120°C [248°F].

Recommended installation temperature: 150°C [302°F]

### Operating Temperature Range

-30°C to 105°C
[-22°F to 221°F]

| Available in: | Americas | Europe | Asia Pacific |
|---|---|---|---|
| | ■ | ■ | ■ |





Catalog 1654025
Revised 3-13

www.te.com

Dimensions are shown for reference purposes only. Specifications subject to change.

Dimensions are in millimeters unless otherwise specified.

USA: +1 800 522 6752
Asia Pacific: +86 0 400 820 6015
UK: +44 800 267 666

For additional support numbers please visit www.te.com

## -100 (Continued)

### Specifications/Approvals

| Military/NAVSEA | TE |
|---|---|
| 5617649 (U.S.) | RW-2082 |
| Def. Stan 59-97, Issue 3, Type DF (Europe) | — |
| BSG 198 Part 5 Type DF (Europe) | — |
| BR1326 listed Class C | — |
| VG95343 Part 29 & 30 | |
| SAE-AS85049/ 140, 141, 142<br>(material designator G) | |

### Product Characteristics

| | | Specification Requirements | Test Method |
|---|---|---|---|
| Physical | Tensile strength | 8 MPa (min.) | ISO 37 |
| | Ultimate elongation | 200% (min.) | ISO 37 |
| | 2% secant modulus | 130 MPa (max.) | ASTM D 882 |
| | Specific gravity | 1.5 (max.) | ISO 1183 |
| Thermal | Heat aging for 168 h at 150°C [302°F] | Ultimate elongation 100% (min.) | ISO 188, ISO 37 |
| | Heat shock for 4 h at 225°C [437°F] | No dripping, cracking, or flowing | ASTM D 2671 |
| | Low-temperature flex at -30°C [-22°F] | No cracking during mandrel bend | ASTM D 2671 |
| Fire safety properties | Limiting oxygen index | 29 min. | ISO 4589-2 |
| | Temperature index | 250°C [482°F] (min.) | ISO 4589-3 |
| | Flammability (burn time) | 100 s (max.) | ASTM D 635 |
| | Smoke index | 20 (max.) | BSG 198 Part 5 |
| | Toxicity index | 5 (max.) per 100 g | NES 713 |
| Electrical | Electric strength | 15 MV/m (min.) | IEC 243 |
| Water absorption | — | 0.75% (max.) at 23°C [73°F]<br>3.5% (max.) at 70°C [158°F] | ISO 62 |
| Fluid resistance | ISO 1817 Gasoline fuel | Tensile strength 5 MPa (min.)<br>Ultimate elongation 150% (min.) | ISO 1817 and ISO 37<br>after immersion for 24 h at 23°C [73°F] |
| | Lubricating oil O-149 | Tensile strength 5 MPa (min.)<br>Ultimate elongation 150% (min.) | ISO 1817 and ISO 37<br>after immersion for 24 h at 50°C [122°F] |
| | Hydraulic fluid H515 | Tensile strength 5 MPa (min.)<br>Ultimate elongation 150% (min.) | ISO 1817 and ISO 37<br>after immersion for 24 h at 23°C [73°F] |

## -100S

### Low-Fire-Hazard Screened Material

### Product Facts

- Screened Zerohal material
- Low smoke index as defined by NES 711
- Low toxicity index as defined by NES 713
- High temperature index as defined by NES 715

**Applications**

-100S is the Zerohal material option in the Rayaten shield (screen) termination system. This material combines the fire safety properties of -100 with the excellent EMI and RFI screening of Rayaten screened molded parts where there is a need to lower the risk.

-100S is suitable for high-performance screen terminations in areas where Zerohal materials are required.

The standard color is black.

Products made from these materials are normally used in an assembly with boot and adapter. See KTKK, TCFS in section 7.

**Operating Temperature Range**

-30°C to 105°C
[-22°F to 221°F]

| Available in: | Americas | Europe | Asia Pacific |
|---|---|---|---|
| | ■ | ■ | ■ |





Catalog 1654025
Revised 3-13

www.te.com

Dimensions are shown for reference purposes only. Specifications subject to change.

Dimensions are in millimeters unless otherwise specified.

USA: +1 800 522 6752
Asia Pacific: +86 0 400 820 6015
UK: +44 800 267 666

For additional support numbers please visit www.te.com

## -100S (Continued)

### Specifications/Approvals

| Military | TE |
|---|---|
| VG 95343 Pt. 20, Pt. 22 | RW-2078 |

### Product Characteristics

| | | Specification Requirements* | Screening Effectiveness in dB at 3 KHz to 30 MHz (min.) | Screening Effectiveness in dB at >30 MHz to 100 MHz (min.) |
|---|---|---|---|---|
| Initial values | | Tensile strength: 7 MPa (min.)<br>Metal adhesion: 15 N/cm (min.)<br>Shielding effectiveness | 75 | 70 |
| Thermal | Heat shock (1/2 h at 200°C [392°F]) | Metal adhesion: 15 N/cm (min.)<br>Shielding effectiveness | 75 | 70 |
| | Heat aging (168 h at 150°C [302°F]) | Metal adhesion: 15 N/cm (min.)<br>Shielding effectiveness | 75 | 70 |
| Fluids | Immersion in the following fluids for 24 h: | | | |
| | Phosphate ester hydraulic fluid DTD900/4881 at 23°C [73°F] | Tensile strength: 5 MPa (min.)<br>Shielding effectiveness | 75 | 70 |
| | Water at 23°C [73°F] | Tensile strength: 5 MPa (min.)<br>Shielding effectiveness | 75 | 70 |
| | Lubricating oil O-149 at 50°C [122°F] | Tensile strength: 5 MPa (min.)<br>Shielding effectiveness | 75 | 70 |
| | Transformer oil S-756 at 50°C [122°F] | Tensile strength: 5 MPa (min.)<br>Shielding effectiveness | 75 | 70 |

*Values quoted are for the polymer/metal composite in all cases when terminated using epoxy adhesives. (Refer to section 5.)

## -125

### Flexible Fluoropolymer

### Product Facts

- **Flame retardant**
- **Abrasion and cut through resistance**
- **High temperature resistance**
- **High fluid resistance**
- **Environmentally sealed**

### Applications

A heat-shrinkable, flame retardant, fluid and high temperature resistant, modified fluoropolymer molding compound. A range of shapes is available. -125 molded parts are recommended for use in System 300.

Use the System 300 family of parts in military and industrial applications where excellent high temperature performance and good physical and chemical properties are a requirement.

System 300 jacketing is based on a modified fluoropolymer and features a one part epoxy adhesive in tape form.

### Installation

-125 molded parts will shrink upon the application of heat in excess of 160°C ± 3°C [320°F ± 5°F].

### Operating Temperature Range

-55°C to 175°C
[-67°F to 347°F]



### Specifications/Approvals

RT-1334

### Product Characteristics

| | | | | |
|---|---|---|---|---|
| Physical | Elastic Memory | Percent | 275 minimum expansion<br>90 minimum retraction | Section 4.3.2 |
| | Tensile Strength | psi (MPa) | 4000 minimum (27.5) | Section 4.3.3 |
| | Ultimate Elongation | Percent | 300 minimum | ASTM D 412 |
| | Secant Modulus | psi (MPa) | 100,000 maximum (689) | Section 4.3.4<br>ASTM D 882 |
| | Specific Gravity | — | 1.85 maximum | ASTM D 792 |
| | Low Temperature Flexibility<br>4 hours at -57 ± 3°C [-70 ± 5°F] | — | No cracking | Section 4.3.5 |
| | Heat Shock<br>4 hours at 300 ± 5°C [572 ± 9°F] | — | No dripping, flowing or cracking | Section 4.3.6 |
| | Heat Resistance<br>168 hours at 250 ± 5°C [482 ± 9°F]<br>Followed by tests for:<br>Tensile Strength<br>Ultimate Elongation<br>2000 hours at 150 ± 3°C [302 ± 5°F]<br>Followed by tests for:<br>Tensile Strength<br>Ultimate Elongation | —<br><br><br>psi (MPa)<br>Percent<br>—<br><br>psi (MPa)<br>Percent | —<br><br><br>3500 minimum (24.1)<br>250 minimum<br>—<br><br>3500 minimum (24.1)<br>250 minimum | Section 4.3.7.1<br><br><br>Section 4.3.3<br>Section 4.3.3<br>Section 4.3.7.2<br><br>Section 4.3.3<br>Section 4.3.3 |

| Available in: | Americas | Europe | Asia Pacific |
|---|---|---|---|
| | ■ | ■ | ■ |



Catalog 1654025
Revised 3-13

www.te.com

Dimensions are shown for reference purposes only. Specifications subject to change.

Dimensions are in millimeters unless otherwise specified.

USA: +1 800 522 6752
Asia Pacific: +86 0 400 820 6015
UK: +44 800 267 666

For additional support numbers please visit www.te.com

## -125 (Continued)

### Product Characteristics
(Continued)

| | | | |
|---|---|---|---|
| **Electrical** | | | |
| Dielectric Strength | Volts/mil (kV/mm) | 300 minimum (11.9) | ASTM D 149 |
| Volume Resistivity | ohm-cm | 1013 minimum | ASTM D 257 |
| **Chemical** | | | |
| Corrosive Effect<br>16 hours at 175 ± 3°C [347 ± 5°F] | — | Noncorrosive | Section 4.3.8<br>ASTM D 2671<br>Procedure A |
| Flammability<br>Initial<br>Average Time of Burning<br>Average Extent of Burning<br>After Fluid Immersion<br>24 hours at 23 ± 3°C [73 ± 5°F]<br>Gasoline, Automotive,<br>Combat MIL-G-3056<br>Fuel Oil, Diesel VV-F-800 DF-2<br>Turbine Fuel, Aviation, JP-4<br>MIL-T-5624<br>Average Time of Burning<br>Average Extent of Burning | <br><br>Seconds<br>Inches (mm)<br><br><br><br><br><br>Seconds<br>Inches (mm) | <br><br>15 maximum<br>1 maximum (25)<br><br><br><br><br><br>30 maximum<br>1 maximum (25) | <br><br>ASTM D 635<br><br><br><br>Section 4.3.10<br><br><br>ASTM D 635 |
| Fungus Resistance | — | Rating of 1 or less | ASTM G 21 |
| Water Absorption<br>24 hours at 23 ± 3°C [73 ± 5°F] | Percent | 0.5 maximum | ASTM D 570 |
| Fluid Resistance<br>24 hours at 23 ± 3°C [73 ± 5°F]<br>Gasoline, Automotive, Combat MIL-G-3056<br>24 hours at 50 ± 3°C [122 ± 5°F]<br>Fuel Oil Diesel VV-F-800 DF-2<br>Turbine Fuel, Aviation, JP-4<br>MIL-T-5624<br>Electrolyte 10873919<br>5% Salt Solution O-S-1926<br>Anti-Icing & Defrosting Fluid MIL-A-8243<br>Lube Oil, Aircraft, Synthetic MIL-L-23699<br>Lube Oil MIL-L-2104<br>Lube Oil, Aircraft, Synthetic MIL-L-7808<br>24 hours at 100 ± 3°C [212 ± 5°F]<br>Hydraulic Fluid, Synthetic MIL-H-46170<br>4 hours at 50 ± 3°C [122 ± 5°F]<br>Cleaning Compound PC-437<br>5 hours at 23 ± 3°C [73 ± 5°F]<br>Decontaminating Agent, DS-2 MIL-D-50030<br>Decontaminating Agent STB MIL-D-12468<br>Followed by tests for:<br>Tensile Strength<br>Ultimate Elongation<br>Weight Increase | —<br><br><br><br><br><br><br><br><br><br><br><br><br><br><br><br><br><br><br><br><br>psi (MPa)<br>Percent<br>Percent | —<br><br><br><br><br><br><br><br><br><br><br><br><br><br><br><br><br><br><br><br><br>3000 minimum (20.7)<br>250 minimum<br>3 maximum | Section 4.3.9<br><br><br><br><br><br><br><br><br><br><br><br><br><br><br><br><br><br><br><br><br>Section 4.3.3<br>Section 4.3.3<br>Section 4.3.9 |
| Adhesive Compatibility<br>Lap Shear Strength<br>NSM to S-1264 to DCNS | psi (kPa) | 100 minimum (689) | Section 4.3.11 |
| **Nuclear** | | | |
| Radiation Resistance<br>Followed by tests for:<br>Tensile Strength<br>Ultimate Elongation | <br><br>psi (MPa)<br>Percent | <br><br>4000 (27.6)<br>250 | Section 4.3.12<br><br>Section 4.3.3 |

## -770

### CBRN Fluoroelastomer Molded Component

### Product Facts

- **Hardened to withstand effect of NBC decontamination agents including DS-2 and STB**
- **Tested in live agent tests with HD, VX and TGD for interior and exterior exposure**
- **Meets the demands of flammability and fluid resistance of current military ground vehicles**
- **Offered with compatible tubing, adhesive, wire and other harness components for a survivable system**

### Applications

-770 heat shrinkable molded shapes are made of a chemically resistant fluoropolymer that is suited for use where moisture, fungus and vehicle fluids and fuels are a concern. Chemical resistance has been tested in accordance with Army TOP 8-2-510 for NBC Contamination Survivability.

### Installation

Boots shrink with temperatures in excess of 150°C

Product is provided with a minimum 2:1 expansion ratio

Optimum application range is 10% above recovered ID to 85% of the expanded ID for all openings.

### Operating Temperature Range

-55°C to 125°C
[-67°F to 257°F]

| Available in: | Americas | Europe | Asia Pacific |
|---|---|---|---|
| | ■ | ■ | ■ |



Catalog 1654025
Revised 3-13

www.te.com

Dimensions are shown for reference purposes only. Specifications subject to change.

Dimensions are in millimeters unless otherwise specified.

USA: +1 800 522 6752
Asia Pacific: +86 0 400 820 6015
UK: +44 800 267 666

For additional support numbers please visit www.te.com

**-770** (Continued)

**Specifications/Approvals**

| Military | TE |
|---|---|
| SC-X15112<br>TOP-8-2-510 | RT-770 type II (Molded Parts) |

**Product Characteristics**

**Physical**

| PROPERTY | UNIT | RT-770 TYPE I TUBING | RT-770 TYPE II MOLDED PARTS | TEST METHOD |
|---|---|---|---|---|
| Dimensions | Inches (*mm*) | In accordance with Table 1 | In accordance with applicable SCD | RT-770 |
| Tensile Strength | Psi (*MPa*) | 2500 (*17.2*) minimum | 2500 (*17.2*) minimum | ASTM D 412 |
| Ultimate Elongation | Percent | 300 minimum | 300 minimum | ASTM D 412 |
| Secant Modulus (expanded), 2% | Psi (*MPa*) | 100,000 (*689*) maximum | 100,000 (*689*) maximum | ASTM 882 |
| Specific Gravity | -- | 1.85 maximum | 1.85 maximum | ASTM D 792 |
| Low Temperature Flexibility<br>4 hours at -55±3˚C (*-67±5˚F*) | -- | No cracking | No cracking | RT-770 |
| Heat Shock<br>4 hours at 225±5˚C (*437±9˚F*) | -- | No dripping, flowing or cracking | No dripping, flowing or cracking | RT-770 |
| Heat Resistance<br>336 hours at 175±3˚C (*347±5˚F*)<br>Followed by tests for: | | | | RT-770 |
| Tensile Strength | Psi (*MPa*) | 2000 (*13.8*) minimum | 2000 (*13.8*) minimum | |
| Ultimate Elongation | Percent | 250 minimum | 250 minimum | |

**Electrical**

| PROPERTY | UNIT | RT-770 TYPE I TUBING | RT-770 TYPE II MOLDED PARTS | TEST METHOD |
|---|---|---|---|---|
| Dielectric Strength | Volts/mil (*kV/mm*) | 400 (*15.7*) minimum | 400 (*15.7*) minimum | ASTM D 149 |
| Volume Resistivity | Ohm-cm | $1 \times 10^{11}$ minimum | $1 \times 10^{11}$ minimum | ASTM D 257 |

**Nuclear**

| PROPERTY | UNIT | RT-770 TYPE I TUBING | RT-770 TYPE II MOLDED PARTS | TEST METHOD |
|---|---|---|---|---|
| Radiation Resistance -10 Mrads gamma<br>Followed by tests for: | | | | RT-770 |
| Tensile Strength | Psi (*MPa*) | 2000 (*13.8*) minimum | 2000 (*13.8*) minimum | |
| Ultimate Elongation | Percent | 150 minimum | 150 minimum | |

**-770** (Continued)

**Chemical**

| PROPERTY | UNIT | RT-770 TYPE I TUBING | RT-770 TYPE II MOLDED PARTS | TEST METHOD |
|---|---|---|---|---|
| Copper Mirror Corrosion<br>16 hours at 175±3˚C (*347±5˚F*) | -- | Non Corrosive | Non Corrosive | ASTM D 2671<br>Procedure A |
| Fungus Resistance | Growth | Rating of 1 or less | Rating of 1 or less | ASTM G21 |
| Water Absorption<br>24 hours at 23±3˚C (*73±5˚F*) | Percent | 0.5 maximum | 0.5 maximum | ASTM D 570 |
| Flammability<br>Average Burn Time | Seconds | 15 maximum | -- | ASTM D 2671<br>Procedure A |
| Average Burn Time<br>Average extent of burning | Seconds<br>Inches | -- | 15 maximum<br>1 maximum | ASTM D 635-98 |
| Fluid Resistance<br>24 hours at 23±3˚C (*73±5˚F*)<br>a) JP-8 Jet Fuel (MIL-DTL-83133)<br>b) Diesel Fuel (VV-F-800, DF-2) | | | | RT-770 |
| Followed by tests for: | | | | |
| Tensile Strength | Psi (MPa) | 2000 (*13.8*) minimum | 2000 (*13.8*) minimum | |
| Ultimate Elongation | Percent | 250 minimum | 250 minimum | |
| Weight Increase | Percent | 3 maximum | 3 maximum | |
| 24 hours at 50±3˚C (*122±5˚F*)<br>a) Bore Cleaner (MIL-PRF-372<br>b) Anti-Icing Fluid (SAE-AMS-1424)<br>c) Salt-5% solution (ASTM D 632)<br>d) Lubricating Oil (MIL-PRF-2104)<br>e) Lubricating Oil (MIL-PRF-23699)<br>f) Arctic Lube (MIL-PRF-46167)<br>g) Cleaning Compound (A-A-59133)<br>h) Electrolyte (P/N 10873919) | | | | |
| Followed by tests for: | | | | |
| Tensile Strength | Psi (MPa) | 2000 (*13.8*) minimum | 2000 (*13.8*) minimum | |
| Ultimate Elongation | Percent | 250 minimum | 250 minimum | |
| Weight Increase | Percent | 3 maximum | 3 maximum | |
| 24 hours at 71±3˚C (*160±5˚F*)<br>Hydraulic, synthetic<br>(MIL-PRF-46170) | | | | |
| Followed by tests for: | | | | |
| Tensile Strength | Psi (MPa) | 2000 (*13.8*) minimum | 2000 (*13.8*) minimum | |
| Ultimate Elongation | Percent | 250 minimum | 250 minimum | |
| Weight Increase | Percent | 3 maximum | 3 maximum | |
| 4 hours at 23±3˚C (*73±5˚F*)<br>a) Decontaminating Agent, DS-2<br>(MIL-D-50030)<br>b) Decontaminating Agent, STB<br>(MIL-DTL-12468)<br>5% Solution | | | | RT-770 |
| Followed by tests for: | | | | |
| Tensile Strength | Psi (MPa) | 2000 (*13.8*) minimum | 2000 (*13.8*) minimum | |
| Ultimate Elongation | Percent | 250 minimum | 250 minimum | |
| Weight Increase | Percent | 3 maximum | 3 maximum | |





Catalog 1654025
Revised 3-13

www.te.com

Dimensions are shown for reference purposes only. Specifications subject to change.

Dimensions are in millimeters unless otherwise specified.

USA: +1 800 522 6752
Asia Pacific: +86 0 400 820 6015
UK: +44 800 267 666

For additional support numbers please visit www.te.com

## -780

### CBRN Fluoroelastomer Molded Component

### Product Facts

- **Hardened to withstand effect of NBC decontamination agents including DS-2 and STB**
- **Tested in live agent tests with HD, VX and TGD for interior and exterior exposure**
- **Meets the demands of flammability and fluid resistance of current military ground vehicles**
- **Offered with compatible tubing, adhesive, wire and other harness components for a survivable system**

### Applications

-780 heat shrinkable molded shapes are made of a chemically resistant fluoropolymer that is suited for use where moisture, fungus and vehicle fluids and fuels are a concern. Chemical resistance has been tested in accordance with Army TOP 8-2-510 for NBC Contamination Survivability.

### Installation

Boots shrink with temperatures in excess of 150°C

Product is provided with a minimum 2:1 expansion ratio

Optimum application range is 10% above recovered ID to 85% of the expanded ID for all openings.

### Operating Temperature Range

-55°C to 175°C
[-67°F to 347°F]

| Available in: | Americas | Europe | Asia Pacific |
|---|---|---|---|
| | ■ | ■ | ■ |



Catalog 1654025
Revised 3-13

www.te.com

Dimensions are shown for reference purposes only. Specifications subject to change.

Dimensions are in millimeters unless otherwise specified.

USA: +1 800 522 6752
Asia Pacific: +86 0 400 820 6015
UK: +44 800 267 666

For additional support numbers please visit www.te.com

**-780** (Continued)

**Specifications/Approvals**

| Military | TE |
|---|---|
| SC-X15112<br>TOP-8-2-510 | RT-780 type II (Molded Parts) |

**Product Characteristics**

**Physical**

| PROPERTY | UNIT | RT-780 TYPE I TUBING | RT-780 TYPE II MOLDED PARTS | TEST METHOD |
|---|---|---|---|---|
| Dimensions | Inches (*mm*) | In accordance with Table 1 | In accordance with applicable SCD | RT-770 |
| Tensile Strength | Psi (*MPa*) | 3000 (*20.7*) minimum | 3000 (*20.7*) minimum | ASTM D 412 |
| Ultimate Elongation | Percent | 300 minimum | 300 minimum | ASTM D 412 |
| Secant Modulus (expanded), 2% | Psi (*MPa*) | 50,000 (*345*) maximum | 50,000 (*345*) maximum | ASTM 882 |
| Specific Gravity | -- | 2.0 maximum | 2.0 maximum | ASTM D 792 |
| Low Temperature Flexibility<br>4 hours at -55±3˚C (*-67±5˚F*) | -- | No cracking | No cracking | RT-780 |
| Heat Shock<br>4 hours at 275±5˚C (*527±9˚F*) | -- | No dripping, flowing or cracking | No dripping, flowing or cracking | RT-780 |
| Heat Resistance<br>336 hours at 200±3˚C (*392±5˚F*)<br>Followed by tests for: | | | | RT-780 |
| Tensile Strength | Psi (*MPa*) | 2000 (*13.8*) minimum | 2000 (*13.8*) minimum | |
| Ultimate Elongation | Percent | 250 minimum | 250 minimum | |

**Electrical**

| PROPERTY | UNIT | RT-780 TYPE I TUBING | RT-780 TYPE II MOLDED PARTS | TEST METHOD |
|---|---|---|---|---|
| Dielectric Strength | Volts/mil (*kV/mm*) | 200 (*7.9*) minimum | 200 (*7.9*) minimum | ASTM D 149 |
| Volume Resistivity | Ohm-cm | $1 \times 10^{11}$ minimum | $1 \times 10^{11}$ minimum | ASTM D 257 |

**Nuclear**

| PROPERTY | UNIT | RT-780 TYPE I TUBING | RT-780 TYPE II MOLDED PARTS | TEST METHOD |
|---|---|---|---|---|
| Radiation Resistance -10 Mrads gamma<br>Followed by tests for: | | | | RT-780 |
| Tensile Strength | Psi (*MPa*) | 2000 (*13.8*) minimum | 2000 (*13.8*) minimum | |
| Ultimate Elongation | Percent | 150 minimum | 150 minimum | |





Catalog 1654025
Revised 3-13

www.te.com

Dimensions are shown for reference purposes only. Specifications subject to change.

Dimensions are in millimeters unless otherwise specified.

USA: +1 800 522 6752
Asia Pacific: +86 0 400 820 6015
UK: +44 800 267 666

For additional support numbers please visit www.te.com

**-780** (Continued)

**Chemical**

| PROPERTY | UNIT | RT-780 TYPE I TUBING | RT-780 TYPE II MOLDED PARTS | TEST METHOD |
|---|---|---|---|---|
| Copper Mirror Corrosion<br>16 hours at 175±3˚C (*347±5˚F*) | -- | Non Corrosive | Non Corrosive | ASTM D 2671<br>Procedure A |
| Fungus Resistance | Growth | Rating of 1 or less | Rating of 1 or less | ASTM G21 |
| Water Absorption<br>24 hours at 23±3˚C (*73±5˚F*) | Percent | 0.5 maximum | 0.5 maximum | ASTM D 570 |
| Flammability<br>Average Burn Time | -- | 1) 25% max. flag burn<br>2) No burning of cotton<br>3) No flaming or glowing longer than 30 seconds | -- | ASTM D 2671<br>Procedure C |
| Average Burn Time | Seconds | -- | 15 maximum | ASTM D 635-98 |
| Average extent of burning | Inches | | 1 maximum | |
| Fluid Resistance<br>24 hours at 23±3˚C (*73±5˚F*)<br>a) JP-8 Jet Fuel (MIL-DTL-83133) | | | | RT-780 |
| Followed by tests for: | | | | |
| Tensile Strength | Psi (MPa) | 2000 (*13.8*) minimum | 2000 (*13.8*) minimum | |
| Ultimate Elongation | Percent | 250 minimum | 250 minimum | |
| Weight Increase | Percent | 3 maximum | 3 maximum | |
| 24 hours at 50±3˚C (*122±5˚F*)<br>a) Bore Cleaner (MIL-PRF-372<br>b) Diesel Fuel DF-2 (A-A-525571)<br>c) Anti-Icing Fluid (SAE-AMS-1424)<br>d) Salt-5% solution (ASTM D 632)<br>e) Lubricating Oil (MIL-PRF-2104)<br>f) Lubricating Oil (MIL-PRF-23699)<br>g) Arctic Lube (MIL-PRF-46167)<br>h) Cleaning Compound (A-A-59133)<br>i) Electrolyte (P/N 10873919) | | | | |
| Followed by tests for: | | | | |
| Tensile Strength | Psi (MPa) | 2000 (*13.8*) minimum | 2000 (*13.8*) minimum | |
| Ultimate Elongation | Percent | 250 minimum | 250 minimum | |
| Weight Increase | Percent | 3 maximum | 3 maximum | |
| 24 hours at 71±3˚C (*160±5˚F*)<br>Hydraulic, synthetic<br>(MIL-PRF-46170) | | | | |
| Followed by tests for: | | | | |
| Tensile Strength | Psi (MPa) | 2000 (*13.8*) minimum | 2000 (*13.8*) minimum | |
| Ultimate Elongation | Percent | 250 minimum | 250 minimum | |
| Weight Increase | Percent | 3 maximum | 3 maximum | |
| 4 hours at 23±3˚C (*73±5˚F*)<br>a) Decontaminating Agent, DS-2<br>(MIL-D-50030)<br>b) Decontaminating Agent, STB<br>(MIL-DTL-12468)<br>5% Solution | | | | RT-780 |
| Followed by tests for: | | | | |
| Tensile Strength | Psi (MPa) | 2000 (*13.8*) minimum | 2000 (*13.8*) minimum | |
| Ultimate Elongation | Percent | 250 minimum | 250 minimum | |
| Weight Increase | Percent | 3 maximum | 3 maximum | |

## -790

### CBRN Fluoroelastomer Molded Component

### Product Facts

- **Hardened to withstand effect of NBC decontamination agents including DS-2 and STB**
- **Tested in live agent tests with HD, VX and TGD for interior and exterior exposure**
- **Meets the demands of flammability and fluid resistance of current military ground vehicles**
- **Offered with compatible tubing, adhesive, wire and other harness components for a survivable system**

### Applications

-790 heat shrinkable molded shapes are made of a chemically resistant fluoropolymer that is suited for use where moisture, fungus and vehicle fluids and fuels are a concern. Chemical resistance has been tested in accordance with Army TOP 8-2-510 for NBC Contamination Survivability.

### Installation

Boots shrink with temperatures in excess of 150°C

Product is provided with a minimum 2:1 expansion ratio

Optimum application range is 10% above recovered ID to 85% of the expanded ID for all openings.

### Operating Temperature Range

-55°C to 200°C
[-67°F to 392°F]

| Available in: | Americas | Europe | Asia Pacific |
|---|---|---|---|
| | ■ | ■ | ■ |



Catalog 1654025
Revised 3-13

www.te.com

Dimensions are shown for reference purposes only. Specifications subject to change.

Dimensions are in millimeters unless otherwise specified.

USA: +1 800 522 6752
Asia Pacific: +86 0 400 820 6015
UK: +44 800 267 666

For additional support numbers please visit www.te.com

**-790** (Continued)

**Specifications/Approvals**

| Military | TE |
|---|---|
| SC-X15112<br>TOP-8-2-510 | RT-790 type II (Molded Parts) |

**Product Characteristics**

**Physical**

| PROPERTY | UNIT | RT-790 TYPE I TUBING | RT-790 TYPE II MOLDED PARTS | TEST METHOD |
|---|---|---|---|---|
| Dimensions | Inches (*mm*) | In accordance with Table 1 | In accordance with applicable SCD | RT-790 |
| Tensile Strength | Psi (*MPa*) | 4000 (*27.6)* minimum | 4000 (*27.6)* minimum | ASTM D 412 |
| Ultimate Elongation | Percent | 300 minimum | 300 minimum | ASTM D 412 |
| Secant Modulus (expanded), 2% | Psi (*MPa*) | 50,000 (*345*) maximum | 50,000 (*345*) maximum | ASTM 882 |
| Specific Gravity | -- | 2.0 maximum | 2.0 maximum | ASTM D 792 |
| Low Temperature Flexibility<br>4 hours at -65±3˚C (*-85±5˚F*) | -- | No cracking | No cracking | RT-790 |
| Heat Shock<br>4 hours at 300±5˚C (*572±9˚F*) | -- | No dripping, flowing or cracking | No dripping, flowing or cracking | RT-790 |
| Heat Resistance<br>336 hours at 250±3˚C (*482±5˚F*)<br>Followed by tests for: | | | | RT-790 |
| Tensile Strength | Psi (*MPa*) | 2000 (*13.8*) minimum | 2000 (*13.8*) minimum | |
| Ultimate Elongation | Percent | 150 minimum | 150 minimum | |

**Electrical**

| PROPERTY | UNIT | RT-790 TYPE I TUBING | RT-790 TYPE II MOLDED PARTS | TEST METHOD |
|---|---|---|---|---|
| Dielectric Strength | Volts/mil (*kV/mm*) | 200 (*7.9*) minimum | 200 (*7.9*) minimum | ASTM D 149 |
| Volume Resistivity | Ohm-cm | $1 \times 10^{11}$ minimum | $1 \times 10^{11}$ minimum | ASTM D 257 |

**Nuclear**

| PROPERTY | UNIT | RT-790 TYPE I TUBING | RT-790 TYPE II MOLDED PARTS | TEST METHOD |
|---|---|---|---|---|
| Radiation Resistance -10 Mrads gamma<br>Followed by tests for: | | | | RT-790 |
| Tensile Strength | Psi (*MPa*) | 3000 (*20.7*) minimum | 3000 (*20.7*) minimum | |
| Ultimate Elongation | Percent | 150 minimum | 150 minimum | |

**-790** (Continued)

**Chemical**

| PROPERTY | UNIT | RT-790 TYPE I TUBING | RT-790 TYPE II MOLDED PARTS | TEST METHOD |
|---|---|---|---|---|
| Copper Mirror Corrosion<br>16 hours at 200±3˚C (*392±5˚F*) | -- | Non Corrosive | Non Corrosive | ASTM D 2671<br>Procedure A |
| Fungus Resistance | Growth | Rating of 1 or less | Rating of 1 or less | ASTM G21 |
| Water Absorption<br>24 hours at 23±3˚C (*73±5˚F*) | Percent | 0.5 maximum | 0.5 maximum | ASTM D 570 |
| Flammability | -- | 1) 25% max. flag burn<br>2) No burning of cotton<br>3) No flaming or glowing longer than 30 seconds | -- | ASTM D 2671<br>Procedure C |
| Average Burn Time | Seconds | -- | 15 maximum | ASTM D 635-98 |
| Average extent of burning | Inches | | 1 maximum | |
| Fluid Resistance<br>24 hours at 23±3˚C (*73±5˚F*)<br>a) JP-8 Jet Fuel (MIL-DTL-83133) | | | | RT-790 |
| Followed by tests for: | | | | |
| Tensile Strength | Psi (MPa) | 3500 (*24.1*) minimum | 3500 (*24.1*) minimum | |
| Ultimate Elongation | Percent | 250 minimum | 250 minimum | |
| Weight Increase | Percent | 3 maximum | 3 maximum | |
| 24 hours at 50±3˚C (*122±5˚F*)<br>a) Bore Cleaner (MIL-PRF-372<br>b) Diesel Fuel DF-2 (A-A-525571)<br>c) Anti-Icing Fluid (SAE-AMS-1424)<br>d) Salt-5% solution (ASTM D 632)<br>e) Lubricating Oil (MIL-PRF-2104)<br>f) Lubricating Oil (MIL-PRF-23699)<br>g) Arctic Lube (MIL-PRF-46167)<br>h) Cleaning Compound (A-A-59133)<br>i) Electrolyte (P/N 10873919) | | | | |
| Followed by tests for: | | | | |
| Tensile Strength | Psi (MPa) | 3500 (*24.1*) minimum | 3500 (*24.1*) minimum | |
| Ultimate Elongation | Percent | 250 minimum | 250 minimum | |
| Weight Increase | Percent | 3 maximum | 3 maximum | |
| 24 hours at 71±3˚C (*160±5˚F*)<br>Hydraulic, synthetic<br>(MIL-PRF-46170) | | | | |
| Followed by tests for: | | | | |
| Tensile Strength | Psi (MPa) | 3500 (*24.1*) minimum | 3500 (*24.1*) minimum | |
| Ultimate Elongation | Percent | 250 minimum | 250 minimum | |
| Weight Increase | Percent | 3 maximum | 3 maximum | |
| 4 hours at 23±3˚C (*73±5˚F*)<br>a) Decontaminating Agent, DS-2<br>(MIL-D-50030)<br>b) Decontaminating Agent, STB<br>(MIL-DTL-12468)<br>5% Solution | | | | RT-790 |
| Followed by tests for: | | | | |
| Tensile Strength | Psi (MPa) | 3500 (*24.1*) minimum | 3500 (*24.1*) minimum | |
| Ultimate Elongation | Percent | 250 minimum | 250 minimum | |
| Weight Increase | Percent | 3 maximum | 3 maximum | |

## End Caps, 101A011 to 094

TE end caps provide optimum waterproofing and environmental protection for underwater, underground, or outdoor applications.

The end caps are highly resistant to moisture, fungus, and weathering.

### Applications

Use for protecting cables and pipes or capping unused outlets in transitions. Provides an environmental seal when used with adhesive.

**As Supplied (a)**

**After Unrestricted Recovery (b)**

### Product Dimensions

| Part No. | H Min. a | H Max. b | P Min. b | HW ±20% b |
|---|---|---|---|---|
| 101A011 | 5.10 [.20] | 2.00 [.08] | 22.90 [.90] | 1.02 [.04] |
| 101A021 | 7.40 [.29] | 3.30 [.13] | 25.40 [1.00] | 1.27 [.05] |
| 101A031 | 10.20 [.40] | 4.80 [.18] | 30.50 [1.20] | 1.52 [.06] |
| 101A041 | 15.20 [.60] | 6.40 [.25] | 40.60 [1.60] | 1.78 [.07] |
| 101A062 | 25.40 [1.00] | 11.40 [.45] | 68.80 [2.70] | 2.29 [.09] |
| 101A083 | 50.80 [2.00] | 22.90 [.90] | 101.60 [4.00] | 2.79 [.11] |
| 101A094 | 83.80 [3.30] | 38.10 [1.50] | 114.30 [4.50] | 3.05 [.12] |

Note: Coating is optional. As supplied dimensions appearing in table are for uncoated parts. When coating is added, entry diameters will be reduced by 1.5 [.06] max.

| Available in: | Americas | Europe | Asia Pacific |
|---|---|---|---|
| | ■ | ■ | ■ |



Dimensions are shown for reference purposes only. Specifications subject to change.

Dimensions are in millimeters unless otherwise specified.

USA: +1 800 522 6752
Asia Pacific: +86 0 400 820 6015
UK: +44 800 267 666

For additional support numbers please visit www.te.com

## End Caps, 101A011 to 094 (Continued)

### Materials Available

| Material* | Material Description | Precoating No. | Adhesive Part No.** |
|---|---|---|---|
| -3 | Semirigid polyolefin | /42 or /86 | S-1017 or S-1048 |
| -4 | Flexible polyolefin | /42 or /86 | S-1017 or S-1048 |
| -12 | Fluoroelastomer | N/A | S-1255-04 |
| -25 | Fluid-resistant elastomer | /42 or /86 | S-1017 or S-1048 or S-1125 |
| -100 | Polyolefin, Zerohal | /180 | S-1030 |

*For more information, please see the appropriate material page in this section.
**For more information, please see section 5.





Catalog 1654025
Revised 3-13

www.te.com

Dimensions are shown for reference purposes only. Specifications subject to change.

Dimensions are in millimeters unless otherwise specified.

USA: +1 800 522 6752
Asia Pacific: +86 0 400 820 6015
UK: +44 800 267 666

For additional support numbers please visit www.te.com

## SSC

### Heat-Shrinkable End Caps

### Product Facts

- **Self-sealing for waterproofing (sealant-coated parts only)**
- **Electrical insulation to 1000 V**
- **Abrasion-resistance**
- **Mechanical protection**
- **Easy installation, requiring no special skills**
- **Operating temperature range of -40°C to 85°C [-40°F to 185°F]**
- **Minimum shrink temperature of 121°C [250°F]**

### Applications

These SSC heat-shrinkable end caps are made from a thermally stabilized, modified polyolefin, which makes them highly resistant to moisture, fungus, and weathering. The end caps also have excellent electrical properties. End caps coated with sealant are available for underwater or underground applications with a pressure differential up to 20 psi between the inside of the cable and the outside environment. End caps may be used over lead, steel, aluminum, copper, polyethylene, polyolefin, EPR, and PVC jacketing materials.

| Available in: | Americas | Europe | Asia Pacific |
|---|---|---|---|
| | ■ | ■ | ■ |



Catalog 1654025
Revised 3-13

www.te.com

Dimensions are shown for reference purposes only. Specifications subject to change.

Dimensions are in millimeters unless otherwise specified.

USA: +1 800 522 6752
Asia Pacific: +86 0 400 820 6015
UK: +44 800 267 666

For additional support numbers please visit www.te.com

## SSC (Continued)

### Specifications/Approvals

| Type | TE | Military/Commercial |
|---|---|---|
| SSC-X and SSC-XTV | SSC specification control drawing | PPS-3011/6 |
| — | RW-2024 | — |

Adhesive is /239 = PPS = 3012/70

### Product Dimensions

| Part No. | Inner Diameter* As Supplied (min.) | Recovered Inside Dia. (max.) | Length Recovered ± 10 % | Wall Thickness Recovered ± 20 % |
|---|---|---|---|---|
| SSC-1 | 10.00 [.390] | 4.00 [.160] | 33.50 [1.320] | 2.00 [.080] |
| SSC-2 | 20.00 [.790] | 7.50 [.300] | 55.30 [2.180] | 2.30 [.090] |
| SSC-3 | 35.00 [1.380] | 15.00 [.590] | 89.90 [3.540] | 3.00 [.120] |
| SSC-4 | 55.00 [2.170] | 25.00 [.980] | 143.20 [5.640] | 3.30 [.130] |
| SSC-5 | 75.00 [2.950] | 32.00 [1.250] | 150.10 [5.910] | 3.30 [.130] |
| SSC-5M1 | 75.00 [2.950] | 32.00 [1.250] | 79.25 [3.120] | 3.30 [.130] |
| SSC-6 | 100.00 [3.940] | 45.00 [1.770] | 162.50 [6.400] | 4.00 [.160] |
| SSC-7 | 120.00 [4.720] | 70.00 [2.760] | 145.00 [5.710] | 3.80 [.150] |

*As-supplied dimensions appearing in table are for uncoated parts. When adhesive is added, entry diameters will be reduced by 1.5 [.06] maximum.

### Ordering Information

| Military | |
|---|---|
| SSC-XTV | Sealing end cap with adhesive , w/ pressure valve |
| SSC-X | Sealing end cap with adhesive |
| SSC-XU | End cap, uncoated |





Catalog 1654025
Revised 3-13

www.te.com

Dimensions are shown for reference purposes only. Specifications subject to change.

Dimensions are in millimeters unless otherwise specified.

USA: +1 800 522 6752
Asia Pacific: +86 0 400 820 6015
UK: +44 800 267 666

For additional support numbers please visit www.te.com

## 202A111 to 196

### Straight Boot

**As Supplied (a)**

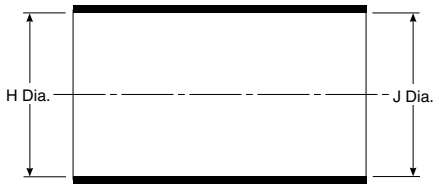


**After Unrestricted Recovery (b)**

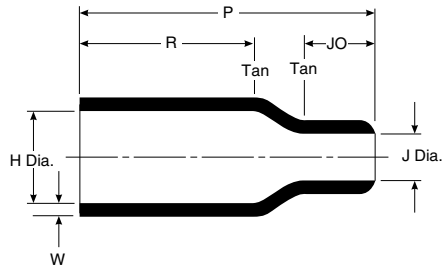


### Applications

Use for mechanical protection and connector/cable strain relief. This family of boots has no lip, so that a boot can be installed directly onto the connector accessory thread.

### Materials Available

| Material* | Material Description | Precoating No. | Adhesive Part No.** |
|---|---|---|---|
| -3 | Semirigid polyolefin | /42 or /86 | S-1017 or S-1048 |
| -4 | Flexible polyolefin | /42 or /86 | S-1017 or S-1048 |
| -12 | Fluoroelastomer | N/A | S-1255-04 |
| -25 | Fluid-resistant elastomer | /42 or /86 or /225 | S-1017 or S-1048 or S-1125 |
| -100 | Polyolefin, Zerohal | /86 or /180 | S-1048 or S-1030 |

*For more information, please see the appropriate material page in this section.
**For more information, please see section 5.

### Product Dimensions

| Part No. | H Min. -3, -4, -25 a | H Min. -12, -100 a | H Max. b | J Min. -3, -4, -25 a | J Min. -12, -100 a | J Max. b | P ±10% b | R ±10% b | JO Ref. b | W ±20% b |
|---|---|---|---|---|---|---|---|---|---|---|
| 202A111 | 16.5 [.65] | 16.5 [.65] | 7.9 [.31] | 16.5 [.65] | 11.9 [.47] | 3.8 [.15] | 25.4 [1.00] | 14.2 [.56] | 5.8 [.23] | 1.27 [.05] |
| 202A121 | 24.6 [.97] | 22.6 [.89] | 9.9 [.39] | 24.6 [.97] | 17.8 [.70] | 5.3 [.21] | 38.1 [1.50] | 21.8 [.86] | 9.1 [.36] | 1.52 [.06] |
| 202A132 | 28.4 [1.12] | 26.2 [1.03] | 14.2 [.56] | 28.4 [1.12] | 20.3 [.80] | 6.6 [.26] | 51.3 [2.02] | 27.9 [1.10] | 13.0 [.51] | 1.78 [.07] |
| 202A142 | 31.0 [1.22] | 31.0 [1.22] | 17.8 [.70] | 31.0 [1.22] | 25.4 [1.00] | 7.4 [.29] | 66.8 [2.63] | 35.6 [1.40] | 17.8 [.70] | 1.78 [.07] |
| 202A153 | 36.1 [1.42] | 36.1 [1.42] | 21.9 [.86] | 36.1 [1.42] | 26.2 [1.03] | 8.6 [.34] | 73.7 [2.90] | 41.4 [1.63] | 16.0 [.63] | 1.78 [.07] |
| 202A163 | 42.7 [1.68] | 42.7 [1.68] | 27.4 [1.08] | 42.7 [1.68] | 27.2 [1.07] | 9.4 [.37] | 99.1 [3.90] | 62.7 [2.47] | 18.0 [.71] | 2.03 [.08] |
| 202A174 | 51.8 [2.04] | 48.3 [1.90] | 35.3 [1.39] | 51.8 [2.04] | 48.3 [1.90] | 16.0 [.63] | 130.0 [5.13] | 64.8 [2.55] | 41.9 [1.65] | 3.30 [.13] |
| 202A185 | 66.0 [2.60] | 66.0 [2.60] | 43.7 [1.72] | 66.0 [2.60] | 54.1 [2.13] | 19.6 [.77] | 161.3 [6.35] | 90.2 [3.55] | 47.8 [1.88] | 3.81 [.15] |
| 202A196 | 86.4 [3.40] | 86.4 [3.40] | 57.2 [2.25] | 86.4 [3.40] | 71.4 [2.81] | 26.9 [1.06] | 212.6 [8.37] | 113.0 [4.45] | 62.2 [2.45] | 4.06 [.16] |

Note: Coating is optional. As supplied dimensions appearing in table are for uncoated parts. When coating is added, entry diameters will be reduced by 1.5 [.06] max.

| Available in: | Americas | Europe | Asia Pacific |
|---|---|---|---|
| | ■ | ■ | ■ |



Catalog 1654025
Revised 3-13

www.te.com

Dimensions are shown for reference purposes only. Specifications subject to change.

Dimensions are in millimeters unless otherwise specified.

USA: +1 800 522 6752
Asia Pacific: +86 0 400 820 6015
UK: +44 800 267 666

For additional support numbers please visit www.te.com

## 202C611 to 663

### Uniboot

**As Supplied (a)**

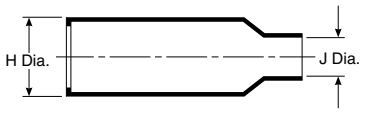


**After Unrestricted Recovery (b)**

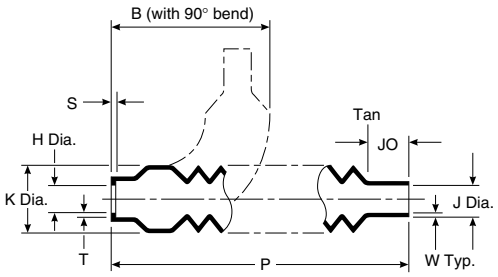


### Applications

Use to provide abrasion protection for connectors. The flexibility of design allows a variety of cable outlet angles. When installed on a spin-coupling adapter, cold reentry to the connector is possible by compressing the molded part. When used with adhesive it provides environmental sealing.

### Materials Available

| Material* | Material Description | Precoating No. | Adhesive Part No.** |
|---|---|---|---|
| -50 | Fluoroelastomer polymer blend | N/A | S-1125 |
| -51 | Elastomer polymer blend | /164 | S-1124 |
| -71 | Flexible polyolefin | /42 or /86 | S-1017 or S-1048 |

*For more information, please see the appropriate material page in this section.
**For more information, please see section 5.

### Product Dimensions

| Part No. | H Min. a -50, -51 | H Min. a -71 | H Max. b | J Min. a -50, -51 | J Min. a -71 | J Max. b | K Max. b | P ±10% b | JO ±10% b | S ±.03[0.76] b | T ±.03[0.76] b | W Min. b | B Nom. b |
|---|---|---|---|---|---|---|---|---|---|---|---|---|---|
| 202C611 | 14.2 [.56] | 17.5 [.69] | 6.9 [.27] | 11.2 [.44] | 14.2 [.56] | 4.8 [.19] | 21.1 [.83] | 120.7 [4.75] | 17.5 [.69] | 1.52 [.06] | 1.27 [.05] | 0.33 [.013] | 62.5 [2.46] |
| 202C621 | 22.4 [.88] | 26.4 [1.04] | 11.7 [.46] | 17.8 [.70] | 26.4 [1.04] | 8.1 [.32] | 26.7 [1.05] | 133.4 [5.25] | 19.0 [.78] | 1.52 [.06] | 1.27 [.05] | 0.46 [.018] | 67.8 [2.67] |
| 202C632 | 34.0 [1.34] | 38.1 [1.50] | 17.5 [.69] | 26.9 [1.06] | 38.1 [1.50] | 12.7 [.50] | 32.8 [1.29] | 146.1 [5.75] | 22.4 [.88] | 1.78 [.07] | 1.27 [.05] | 0.51 [.020] | 73.4 [2.89] |
| 202C642 | 44.2 [1.74] | 47.8 [1.88] | 22.4 [.88] | 36.6 [1.44] | 47.8 [1.88] | 17.5 [.69] | 37.8 [1.49] | 158.8 [6.25] | 25.4 [1.00] | 1.78 [.07] | 1.27 [.05] | 0.61 [.024] | 78.2 [3.08] |
| 202C653 | 53.8 [21.2] | 54.9 [2.16] | 27.9 [1.10] | 45.7 [1.80] | 54.9 [2.16] | 22.4 [.88] | 42.9 [1.69] | 171.5 [6.75] | 28.4 [1.12] | 1.78 [.07] | 2.03 [.08] | 0.61 [.024] | 82.8 [3.26] |
| 202C663 | 57.2 [22.5] | 77.2 [3.04] | 40.6 [1.60] | 57.2 [2.25] | 54.6 [2.15] | 22.9 [.90] | 62.2 [2.45] | 236.2 [9.30] | 35.1 [1.38] | 2.03 [.08] | 2.03 [.08] | 0.66 [.026] | 138.4 [5.45] |

Note: Coating is optional. As supplied dimensions appearing in table are for uncoated parts. When coating is added, entry diameters will be reduced by 1.5 [.06] max.

| Available in: | Americas | Europe | Asia Pacific |
|---|---|---|---|
| | ■ | ■ | ■ |





Catalog 1654025
Revised 3-13

www.te.com

Dimensions are shown for reference purposes only. Specifications subject to change.

Dimensions are in millimeters unless otherwise specified.

USA: +1 800 522 6752
Asia Pacific: +86 0 400 820 6015
UK: +44 800 267 666

For additional support numbers please visit www.te.com

## 202D121 to 196

### Straight, Lipped Boot

**As Supplied (a)**

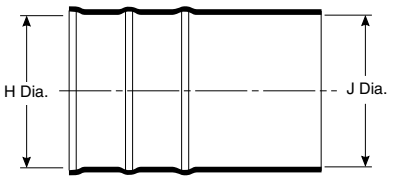


**After Unrestricted Recovery (b)**

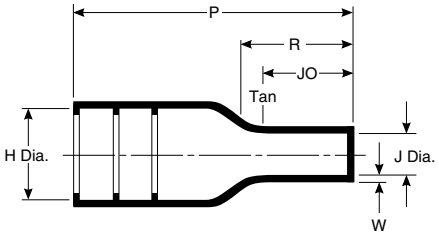


### Applications

Use in conjunction with TE adapters to provide strain relief for harness systems using circular connectors. Boot is compatible with all grooved adapters of appropriate shell size.

### Materials Available

| Material* | Material Description | Precoating No. | Adhesive Part No.** |
|---|---|---|---|
| -3 | Semirigid polyolefin | /42 or /86 | S-1017 or S-1048 |
| -4 | Flexible polyolefin | /42 or /86 | S-1017 or S-1048 |
| -12 | Fluoroelastomer | N/A | S-1255-04 |
| -25 | Fluid-resistant elastomer | /42 or /86 or /225 | S-1017 or S-1048 or S-1125 |
| -100 | Polyolefin, Zerohal | 186/180 | S-1048 or S-1030 |

*For more information, please see the appropriate material page in this section.
**For more information, please see section 5.

### Product Dimensions

| Part No. | H | | J | | | P | JO | W | R |
|---|---|---|---|---|---|---|---|---|---|
| | Min. a | Max. b | Min. -3, -4, -25 a | Min. -12, -100 a | Max. b | ±10% b | ±10% b | ±20% b | ±10% b |
| 202D121 | 23.3 [.92] | 10.5 [.41] | 23.3 [.92] | 12.4 [.49] | 5.6 [.22] | 38.1 [1.50] | 10.2 [.40] | 1.78 [.07] | — |
| 202D132 | 28.4 [1.12] | 14.3 [.56] | 28.4 [1.12] | 14.7 [.58] | 6.6 [.26] | 54.9 [2.16] | 16.5 [.65] | 1.78 [.07] | 21.6 [.85] |
| 202D142 | 31.0 [1.22] | 17.8 [.70] | 31.0 [1.22] | 16.0 [.63] | 7.2 [.28] | 66.8 [2.63] | 17.8 [.70] | 2.03 [.08] | 24.5 [.96] |
| 202D153 | 36.0 [1.42] | 22.4 [.88] | 36.0 [1.42] | 18.5 [.73] | 8.4 [.33] | 80.0 [3.15] | 20.8 [.82] | 2.03 [.08] | 29.7 [1.17] |
| 202D163 | 42.7 [1.68] | 28.2 [1.11] | 42.7 [1.68] | 22.0 [.87] | 9.9 [.39] | 103.6 [4.08] | 24.6 [.97] | 2.29 [.09] | 36.7 [1.44] |
| 202D174 | 51.8 [2.04] | 35.1 [1.38] | 51.8 [2.04] | 35.3 [1.39] | 15.8 [.62] | 130.3 [5.13] | 39.6 [1.56] | 3.30 [.13] | 53.8 [2.12] |
| 202D185 | 66.0 [2.60] | 44.5 [1.75] | 66.0 [2.60] | 45.7 [1.80] | 20.4 [.80] | 165.1 [6.50] | 48.3 [1.90] | 4.06 [.16] | 65.6 [2.59] |
| 202D196 | 81.7 [3.22] | 57.6 [2.27] | 81.7 [3.22] | 57.1 [2.25] | 25.4 [1.00] | 177.8 [7.00] | 47.8 [1.88] | 4.06 [.16] | 67.1 [2.64] |

Note: Coating is optional. As supplied dimensions appearing in table are for uncoated parts. When coating is added, entry diameters will be reduced by 1.5 [.06] max.

| Available in: | Americas | Europe | Asia Pacific |
|---|---|---|---|
| | ■ | ■ | ■ |



Catalog 1654025
Revised 3-13

www.te.com

Dimensions are shown for reference purposes only. Specifications subject to change.

Dimensions are in millimeters unless otherwise specified.

USA: +1 800 522 6752
Asia Pacific: +86 0 400 820 6015
UK: +44 800 267 666

For additional support numbers please visit www.te.com

## 202D211 to 299

### Straight, Lipped Boot

**As Supplied (a)**

**After Unrestricted Recovery (b)**

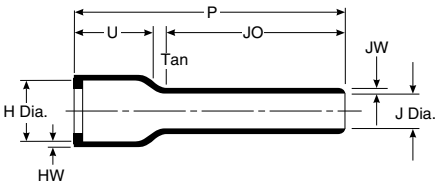


### Applications

Use with circular connectors and the appropriate TE backshell adapter to provide connector/cable strain relief. Boot is used on open-wire-bundle airborne harnesses, or applications where the long tail replaces cable jacketing removed during termination.

### Materials Available

| Material* | Material Description | Precoating No. | Adhesive Part No.** |
|---|---|---|---|
| -3 | Semirigid polyolefin | /42 or /86 | S-1017 or S-1048 |
| -4 | Flexible polyolefin | /42 or /86 | S-1017 or S-1048 |
| -12 | Fluoroelastomer | N/A | S-1255-04 |
| -25 | Fluid-resistant elastomer | /42 or /86 or /225 | S-1017 or S-1048 or S-1125 |
| -100 | Polyolefin, Zerohal | /86 or /180 | S-1048 or S-1030 |

*For more information, please see the appropriate material page in this section.
**For more information, please see section 5.

### Product Dimensions

| Part No. | H Min. a | H Max. b | J Min. -3, -4, -25 a | J Min. -12, -100 a | J Max. b | P ±10% b | JO ±10% b | U ±10% b | HW ±20% b | JW ±20% b |
|---|---|---|---|---|---|---|---|---|---|---|
| 202D211 | 22.4 [.88] | 11.4 [.45] | 22.4 [.88] | 14.0 [.55] | 6.4 [.25] | 105.9 [4.17] | 86.4 [3.40] | 14.2 [.56] | 1.52 [.06] | 1.14 [.045] |
| 202D221 | 25.7 [1.01] | 15.0 [.59] | 25.7 [1.01] | 16.0 [.63] | 7.4 [.29] | 121.2 [4.77] | 98.6 [3.88] | 15.0 [.59] | 1.52 [.06] | 1.14 [.045] |
| 202D232 | 29.5 [1.16] | 18.8 [.74] | 29.5 [1.16] | 18.3 [.72] | 8.4 [.33] | 138.7 [5.46] | 112.8 [4.44] | 15.5 [.61] | 1.78 [.07] | 1.14 [.045] |
| 202D242 | 34.0 [1.34] | 22.9 [.90] | 34.0 [1.34] | 21.3 [.84] | 9.7 [.38] | 159.5 [6.28] | 130.8 [5.15] | 15.7 [.62] | 1.78 [.07] | 1.14 [.045] |
| 202D253 | 37.3 [1.47] | 29.5 [1.16] | 37.3 [1.47] | 23.1 [.91] | 10.4 [.41] | 177.8 [7.00] | 142.2 [5.60] | 18.0 [.71] | 2.0 [.08] | 1.14 [.045] |
| 202D263 | 43.7 [1.72] | 34.0 [1.34] | 43.7 [1.72] | 27.2 [1.07] | 12.2 [.48] | 203.2 [8.00] | 163.1 [6.42] | 19.8 [.78] | 2.0 [.08] | 1.14 [.045] |
| 202D274 | 50.0 [1.97] | 41.2 [1.62] | 50.0 [1.97] | 31.5 [1.24] | 14.2 [.56] | 203.2 [8.00] | 157.7 [6.21] | 20.8 [.82] | 2.3 [.09] | 1.40 [.055] |
| 202D285 | 62.7 [2.47] | 47.0 [1.85] | 62.7 [2.47] | 39.1 [1.54] | 17.5 [.69] | 203.2 [8.00] | 153.2 [6.03] | 23.4 [.92] | 2.5 [.10] | 1.40 [.055] |
| 202D296 | 69.3 [2.73] | 59.7 [2.35] | 69.3 [2.73] | 43.2 [1.70] | 19.6 [.77] | 203.2 [8.00] | 143.3 [5.64] | 23.6 [.93] | 2.5 [.10] | 1.40 [.055] |
| 202D299 | 81.8 [3.22] | 67.1 [2.64] | 81.8 [3.22] | 51.1 [2.01] | 22.9 [.90] | 203.2 [8.00] | 138.4 [5.45] | 31.2 [1.23] | 2.5 [.10] | 1.40 [.055] |

Note: Coating is optional. As supplied dimensions appearing in table are for uncoated parts. When coating is added, entry diameters will be reduced by 1.5 [.06] max.

| Available in: | Americas | Europe | Asia Pacific |
|---|---|---|---|
| | ■ | ■ | ■ |





Catalog 1654025
Revised 3-13

www.te.com

Dimensions are shown for reference purposes only. Specifications subject to change.

Dimensions are in millimeters unless otherwise specified.

USA: +1 800 522 6752
Asia Pacific: +86 0 400 820 6015
UK: +44 800 267 666

For additional support numbers please visit www.te.com

## 202D921 to 963

### Straight, Lipped Boot

**As Supplied (a)**

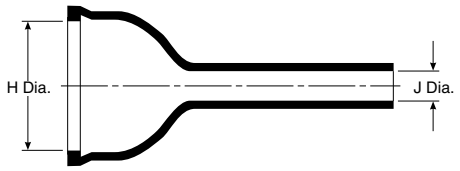


**After Unrestricted Recovery (b)**

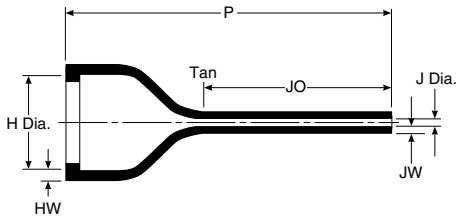


### Applications

Use with circular connectors and the appropriate TE backshell adapter to provide connector/cable strain relief. Boot is used in applications where only a small number of the available contacts are utilized, thus resulting in a high ratio between the adapter and cable diameters.

### Materials Available

| Material* | Material Description | Precoating No. | Adhesive Part No.** |
|---|---|---|---|
| -3 | Semirigid polyolefin | /42 or /86 | S-1017 or S-1048 |
| -4 | Flexible polyolefin | /42 or /86 | S-1017 or S-1048 |
| -12 | Fluoroelastomer | N/A | S-1255-04 |
| -25 | Fluid-resistant elastomer | /42 or /86 or /225 | S-1017 or S-1048 or S-1125 |
| -100 | Polyolefin, Zerohal | /86 or /180 | S-1048 or S-1030 |

*For more information, please see the appropriate material page in this section.
**For more information, please see section 5.

### Product Dimensions

| Part No. | H | | J | | | P | JO | HW | JW |
|---|---|---|---|---|---|---|---|---|---|
| | Min. a | Max. b | Min. -3, -4, -25 a | Min. -12, -100 a | Max. b | ±10% b | ±10% b | ±20% b | ±20% b |
| 202D921 | 19.3 [.76] | 13.0 [.51] | 6.3 [.25] | 4.5 [.18] | 2.1 [.08] | 60.2 [2.37] | 37.6 [1.48] | 1.52 [.06] | 1.14 [.045] |
| 202D932 | 26.1 [1.03] | 19.1 [.75] | 7.6 [.30] | 5.5 [.22] | 2.6 [.10] | 74.2 [2.92] | 45.0 [1.77] | 1.78 [.07] | 1.14 [.045] |
| 202D953 | 34.2 [1.35] | 26.0 [1.02] | 9.6 [.38] | 6.6 [.26] | 3.1 [.12] | 84.3 [3.32] | 51.1 [2.01] | 1.78 [.07] | 1.14 [.045] |
| 202D963 | 43.6 [1.72] | 34.1 [1.34] | 11.4 [.45] | 7.8 [.31] | 3.6 [.14] | 99.6 [3.92] | 57.7 [2.27] | 1.78 [.07] | 1.14 [.045] |

Note: Coating is optional. As supplied dimensions appearing in table are for uncoated parts. When coating is added, entry diameters will be reduced by 1.5 [.06] max.

| Available in: | Americas | Europe | Asia Pacific |
|---|---|---|---|
| | ■ | ■ | ■ |





Dimensions are shown for reference purposes only. Specifications subject to change.

Dimensions are in millimeters unless otherwise specified.

USA: +1 800 522 6752
Asia Pacific: +86 0 400 820 6015
UK: +44 800 267 666

For additional support numbers please visit www.te.com

## 202F211 to 274

### Straight, Lipped Boot

**As Supplied (a)**

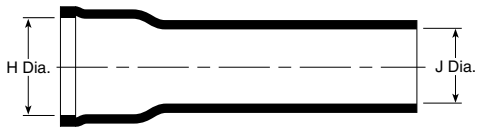


**After Unrestricted Recovery (b)**

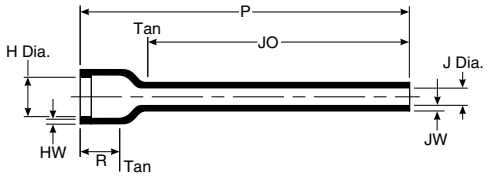


### Applications

Use in conjunction with TE adapters to provide strain relief for harness systems using circular connectors. Boot is compatible with all grooved adapters of the appropriate shell size.

### Materials Available

| Material* | Material Description | Precoating No. | Adhesive Part No.** |
|---|---|---|---|
| -50 | Flexible Fluoroelastomer polymer blend | N/A | S-1125 |
| -51 | Flexible elastomer polymer blend | /164 | S-1124 |
| -71 | Flexible polyolefin | /42 or /86 | S-1017 or S-1048 |

### Product Dimensions

| Part No. | H Min. a | H Max. b | J Min. a | J Max. b | P ±10% b | JO ±10% b | HW ±20% b | JW ±20% b |
|---|---|---|---|---|---|---|---|---|
| 202F211 | 23.9 [.94] | 9.9 [.39] | 17.3 [.68] | 6.6 [.26] | 105.9 [4.17] | 86.4 [3.40] | 1.5 [.06] | 1.5 [.06] |
| 202F221 | 27.2 [1.07] | 13.2 [.52] | 20.8 [.82] | 7.6 [.30] | 121.2 [4.77] | 98.6 [3.88] | 1.5 [.06] | 1.5 [.06] |
| 202F232 | 31.0 [1.22] | 18.5 [.73] | 24.4 [.96] | 8.9 [.35] | 138.7 [5.46] | 112.8 [4.44] | 1.8 [.07] | 1.5 [.06] |
| 202F242 | 35.6 [1.40] | 22.1 [.87] | 28.7 [1.13] | 10.2 [.40] | 159.5 [6.28] | 130.8 [5.15] | 1.8 [.07] | 1.5 [.06] |
| 202F253 | 38.9 [1.53] | 28.2 [1.11] | 31.5 [1.24] | 10.9 [.43] | 177.8 [7.00] | 142.2 [5.60] | 1.8 [.07] | 1.5 [.06] |
| 202F263 | 45.2 [1.78] | 32.3 [1.27] | 38.4 [1.51] | 12.7 [.50] | 203.2 [8.00] | 163.1 [6.42] | 1.8 [.07] | 1.5 [.06] |
| 202F274 | 51.6 [2.03] | 41.1 [1.62] | 45.5 [1.79] | 15.0 [.59] | 203.2 [8.00] | 157.7 [6.21] | 1.8 [.07] | 1.8 [.07] |

Note: Coating is optional. As supplied dimensions appearing in table are for uncoated parts. When coating is added, entry diameters will be reduced by 1.5 [.06] max.

| Available in: | Americas | Europe | Asia Pacific |
|---|---|---|---|
| | ■ | ■ | ■ |





Catalog 1654025
Revised 3-13

www.te.com

Dimensions are shown for reference purposes only. Specifications subject to change.

Dimensions are in millimeters unless otherwise specified.

USA: +1 800 522 6752
Asia Pacific: +86 0 400 820 6015
UK: +44 800 267 666

For additional support numbers please visit www.te.com

## 202G211 to 253

### Straight, Low Profile Lipped Boot

**As Supplied (a)**

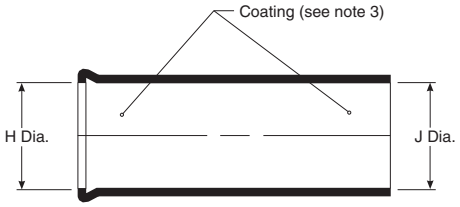


**After Unrestricted Recovery (b)**

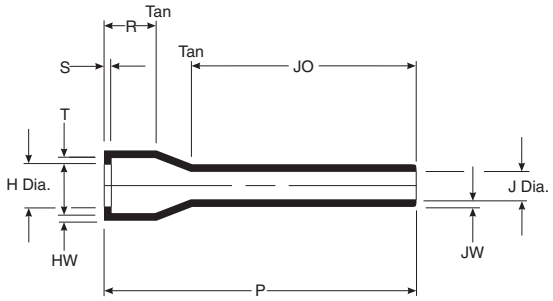


### Applications

Use in conjunction with TE adapters to provide strain relief for harness systems using circular connectors. This range of parts is compatible with all grooved adapters of appropriate shell or entry size. When used with adhesive it provides environmental sealing.

### Materials Available

| Material Dash No. | Material Description | Adhesive |
|---|---|---|
| -55 | Fluoroploymer | S-1255-04 |

### Product Dimensions

| Part No. | H Min. a | H Max. b | J Min. a | J Max. b | P ±10% b | R ±10% b | S Ref. b | T Ref. b | JO ±10% b | HW Ref. b | JW Ref. b |
|---|---|---|---|---|---|---|---|---|---|---|---|
| 202G211 | 23.9 [.94] | 9.9 [.39] | 23.9 [.94] | 7.4 [.29] | 105.9 [4.17] | 11.7 [.46] | 1.0 [.04] | 1.3 [.05] | 86.4 [3.40] | 1.0 [.04] | 0.7 [.03] |
| 202G221 | 27.2 [1.07] | 13.2 [.52] | 27.2 [1.07] | 8.4 [.33] | 121.2 [4.77] | 12.2 [.48] | 1.0 [.04] | 1.3 [.05] | 87.4 [3.44] | 1.0 [.04] | 0.7 [.03] |
| 202G232 | 31.0 [1.22] | 18.5 [.73] | 31.0 [1.22] | 9.4 [.37] | 138.7 [5.46] | 12.2 [.48] | 1.0 [.04] | 1.3 [.05] | 104.4 [4.11] | 1.0 [.04] | 0.7 [.03] |
| 202G242 | 31.7 [1.25] | 22.1 [.87] | 31.7 [1.25] | 10.7 [.42] | 159.5 [6.28] | 12.2 [.48] | 1.0 [.04] | 1.5 [.06] | 124.5 [4.90] | 1.0 [.04] | 0.7 [.03] |
| 202G253 | 38.9 [1.53] | 28.2 [1.11] | 38.9 [1.53] | 11.9 [.47] | 177.8 [7.00] | 10.6 [.42] | 1.3 [.05] | 1.8 [.07] | 143.5 [5.65] | 1.3 [.05] | 1.0 [.04] |

| Available in: | Americas | Europe | Asia Pacific |
|---|---|---|---|
| | ■ | ■ | ■ |



Catalog 1654025
Revised 3-13

www.te.com

Dimensions are shown for reference purposes only. Specifications subject to change.

Dimensions are in millimeters unless otherwise specified.

USA: +1 800 522 6752
Asia Pacific: +86 0 400 820 6015
UK: +44 800 267 666

For additional support numbers please visit www.te.com

## 202G611 to 653

### Uniboot

**As Supplied (a)**

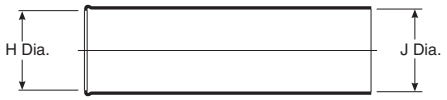


**After Unrestricted Recovery (b)**

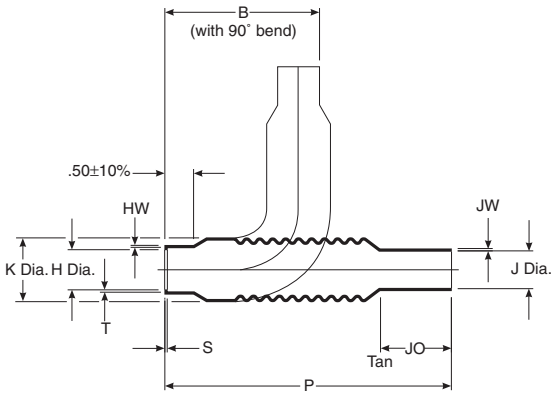


### Applications

Use to provide abrasion protection for connectors. The flexibility of design allows a variety of cable outlet angles. When installed on a spin-coupling adapter, cold re-entry to the connector is possible by unscrewing the adapter and compressing the molded part. When used with adhesive it provides environmental sealing.

### Materials Available

| Material Dash No. | Material Description | Adhesive |
|---|---|---|
| -55 | Fluoroploymer | S-1255-04 |

### Product Dimensions

| Part No. | H Min. a | H Max. b | J Min. a | J Max. b | K Max. b | P ±10% b | JO ±10% b | HW Ref. b | JW Ref. b | S Ref. b | T Ref. b | B Nom. b |
|---|---|---|---|---|---|---|---|---|---|---|---|---|
| 202G611 | 14.2 [.56] | 6.9 [.27] | 11.2 [.44] | 4.8 [.19] | 21.1 [.83] | 120.7 [4.75] | 17.5 [.69] | 1.0 [.04] | 0.7 [.03] | 1.0 [.04] | 1.3 [.05] | 62.5 [2.46] |
| 202G621 | 26.6 [1.05] | 11.7 [.46] | 26.6 [1.05] | 8.1 [.32] | 26.6 [1.05] | 133.8 [5.27] | 19.9 [.78] | 1.0 [.04] | 0.7 [.03] | 1.0 [.04] | 1.3 [.05] | 67.8 [2.67] |
| 202G632 | 33.0 [1.30] | 17.5 [.69] | 33.0 [1.30] | 12.7 [.50] | 32.7 [1.29] | 151.1 [5.95] | 22.4 [.88] | 1.0 [.04] | 0.7 [.03] | 1.0 [.04] | 1.3 [.05] | 73.4 [2.89] |
| 202G642 | 35.5 [1.40] | 22.3 [.88] | 35.5 [1.40] | 17.5 [.69] | 37.8 [1.49] | 157.2 [6.19] | 25.4 [1.00] | 1.3 [.05] | 1.0 [.04] | 1.3 [.05] | 1.3 [.05] | 78.2 [3.08] |
| 202G653 | 42.6 [1.68] | 27.9 [1.10] | 42.6 [1.68] | 22.4 [.88] | 42.9 [1.69] | 170.2 [6.70] | 28.4 [1.12] | 1.3 [.05] | 1.0 [.04] | 1.3 [.05] | 1.5 [.06] | 82.8 [3.26] |

| Available in: | Americas | Europe | Asia Pacific |
|---|---|---|---|
| | ■ | ■ | ■ |





Catalog 1654025
Revised 3-13

www.te.com

Dimensions are shown for reference purposes only. Specifications subject to change.

Dimensions are in millimeters unless otherwise specified.

USA: +1 800 522 6752
Asia Pacific: +86 0 400 820 6015
UK: +44 800 267 666

For additional support numbers please visit www.te.com

## 202K121 to 185

### Straight, Lipped Boot

**As Supplied (a)**

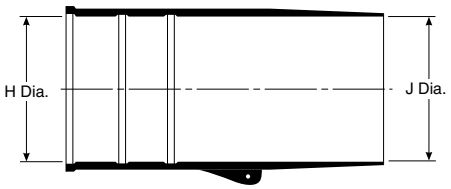


**After Unrestricted Recovery (b)**

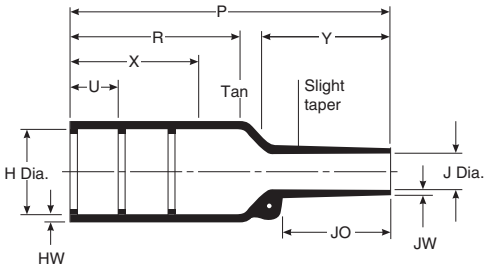


202K121 - 153 = 2 lips
202K163 - 185 = 3 lips

Mod 01 = 1 lip removed
Mod 02 = 2 lips removed
(only available in sizes 163, 174, 185).
For eyelet clip, order CS-1858 option.

### Applications

Use in conjunction with TE adapters to provide strain relief for harness systems using circular connectors. Boot is compatible with all grooved adapters of the appropriate shell size.

### Materials Available

| Material* | Material Description | Precoating No. | Adhesive Part No.** |
|---|---|---|---|
| -3 | Semirigid polyolefin | /42 or /86 | S-1017 or S-1048 |
| -4 | Flexible polyolefin | /42 or /86 | S-1017 or S-1048 |
| -12 | Fluoroelastomer | N/A | S-1255-04 |
| -25 | Fluid-resistant elastomer | /42 or /86 or /225 | S-1017 or S-1048 or S-1125 |
| -100 | Polyolefin, Zerohal | /86 or /180 | S-1048 or S-1030 |

*For more information, please see the appropriate material page in this section.
**For more information, please see section 5.

### Product Dimensions

| Part No. | H Min. -3,-4,-12,-25 a | H Min. -100 a | H Max. b | J Min. -3, -4, -25 a | J Min. -12 a | J Min. -100 a | J Max. b | P ±10% b | R ±10% b | U ±10% b | JO ±10% b | HW ±20% b | JW Min. b | X ±20% b | Y ±20% b |
|---|---|---|---|---|---|---|---|---|---|---|---|---|---|---|---|
| 202K121 | 24.0 [.95] | 24.0 [.95] | 10.4 [.41] | 24.0 [.95] | 13.0 [.51] | 14.0 [.55] | 5.6 [.22] | 38.0 [1.50] | 21.0 [.83] | 12.0 [.47] | 8.5 [.33] | 1.6 [.06] | .41 [.016] | 24.0 [.94] | 13.0 [.51] |
| 202K132 | 30.0 [1.18] | 30.0 [1.18] | 14.2 [.56] | 30.0 [1.18] | 14.0 [.55] | 15.0 [.59] | 5.9 [.23] | 55.0 [2.17] | 32.0 [1.26] | 12.0 [.47] | 11.5 [.45] | 1.8 [.07] | .81 [.032] | 24.0 [.94] | 18.0 [.71] |
| 202K142 | 31.0 [1.22] | 31.0 [1.22] | 18.0 [.71] | 31.0 [1.22] | 16.0 [.63] | 18.0 [.71] | 7.1 [.28] | 67.0 [2.64] | 35.0 [1.38] | 20.0 [.79] | 17.0 [.67] | 1.8 [.07] | .81 [.032] | 32.0 [1.26] | 25.0 [.98] |
| 202K153 | 36.0 [1.42] | 36.0 [1.42] | 22.4 [.88] | 36.0 [1.42] | 19.0 [.75] | 21.0 [.83] | 8.4 [.33] | 80.0 [3.15] | 42.0 [1.65] | 20.0 [.79] | 19.5 [.76] | 2.0 [.08] | .81 [.032] | 32.0 [1.26] | 30.0 [1.18] |
| 202K163 | 43.0 [1.69] | 43.0 [1.69] | 28.2 [1.11] | 43.0 [1.69] | 22.0 [.87] | 25.0 [.98] | 9.9 [.39] | 99.0 [3.90] | 61.0 [2.40] | 20.0 [.79] | 21.0 [.82] | 2.2 [.08] | .81 [.032] | 52.0 [2.05] | 30.0 [1.18] |
| 202K174 | 60.0 [2.36] | 52 [12.05] | 35.1 [1.38] | 60.0 [2.36] | 35.0 [1.38] | 39.0 [1.54] | 15.7 [.62] | 130.0 [5.12] | 72.0 [2.83] | 20.0 [.79] | 39.0 [1.53] | 3.3 [.13] | 1.02 [.040] | 52.0 [2.05] | 50.0 [1.97] |
| 202K185 | 66.0 [2.60] | 66 [12.60] | 44.5 [1.75] | 66.0 [2.60] | 38.0 [1.50] | 42.0 [1.65] | 16.8 [.66] | 170.0 [6.69] | 90.0 [3.54] | 20.0 [.79] | 51.5 [2.02] | 3.8 [.15] | 1.63 [.064] | 52.0 [2.05] | 70.0 [2.76] |

Note: Coating is optional. As supplied dimensions appearing in table are for uncoated parts. When coating is added, entry diameters will be reduced by 1.5 [.06] max.

| Available in: | Americas | Europe | Asia Pacific |
|---|---|---|---|
| | ■ | ■ | ■ |



Catalog 1654025
Revised 3-13

www.te.com

Dimensions are shown for reference purposes only. Specifications subject to change.

Dimensions are in millimeters unless otherwise specified.

USA: +1 800 522 6752
Asia Pacific: +86 0 400 820 6015
UK: +44 800 267 666

For additional support numbers please visit www.te.com

## 214A011 to 052

### D-Subminiature, Straight Boot

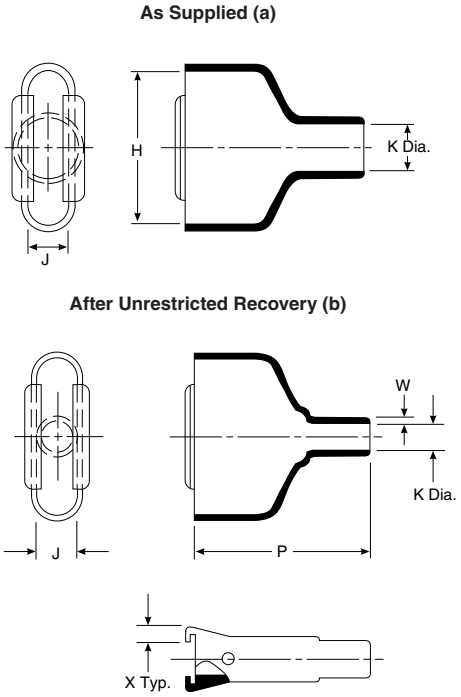


### Applications

Provides strain relief and mechanical protection on D-subminiature connector terminations.

### Materials Available

| Material* | Material Description | Precoating No. | Adhesive Part No.** |
|---|---|---|---|
| -3 | Semirigid polyolefin | /42 or /86 | S-1017 or S-1048 |
| -4 | Flexible polyolefin | /42 or /86 | S-1017 or S-1048 |
| -12 | Fluoroelastomer | N/A | S-1255-04 |
| -25 | Fluid-resistant elastomer | /42 or /86 or /225 | S-1017 or S-1048 or S-1125 |
| -100 | Polyolefin, Zerohal | /86 or /180 | S-1048 or S-1030 |

*For more information, please see the appropriate material page in this section.
**For more information, please see section 5.

### Product Dimensions

| Part No. | H | | J | | K | | P | W | X | This Boot Fits | |
|---|---|---|---|---|---|---|---|---|---|---|---|
| | ±5% a | ±5% b | ±5% a | ±5% b | Min. a | Max. b | ±10% b | ±20% b | ±20% b | Cannon/ Cinch | Amphenol Series 17 |
| 214A011 | 20.3 [.80] | 20.3 [.80] | 10.7 [.42] | 10.7 [.42] | 7.9 [.31] | 4.1 [.16] | 33.3 [1.31] | 1.0 [.04] | 3.0 [.12] | DE-9 | XX09X |
| 214A021 | 28.2 [1.11] | 28.2 [1.11] | 10.7 [.42] | 10.7 [.42] | 10.2 [.40] | 5.3 [.21] | 38.9 [1.53] | 1.0 [.04] | 3.0 [.12] | DA-15 | XX15X |
| 214A032 | 42.2 [1.66] | 42.2 [1.66] | 10.7 [.42] | 10.7 [.42] | 14.0 [.55] | 8.1 [.32] | 45.0 [1.77] | 1.0 [.04] | 3.0 [.12] | DB-25 | XX25X |
| 214A042 | 58.7 [2.31] | 58.7 [2.31] | 10.7 [.42] | 10.7 [.42] | 17.3 [.68] | 8.6 [.34] | 53.3 [2.10] | 1.0 [.04] | 3.0 [.12] | DC-37 | XX37X |
| 214A052 | 57.9 [2.28] | 57.9 [2.28] | 13.7 [.54] | 13.7 [.54] | 19.1 [.75] | 10.7 [.42] | 61.0 [2.40] | 1.0 [.04] | 3.0 [.12] | DD-50 | XX50X |

Note: Coating is optional. As supplied dimensions appearing in table are for uncoated parts. When coating is added, entry diameters will be reduced by 1.5 [.06] max.

| Available in: | Americas | Europe | Asia Pacific |
|---|---|---|---|
| | ■ | ■ | ■ |





Catalog 1654025
Revised 3-13

www.te.com

Dimensions are shown for reference purposes only. Specifications subject to change.

Dimensions are in millimeters unless otherwise specified.

USA: +1 800 522 6752
Asia Pacific: +86 0 400 820 6015
UK: +44 800 267 666

For additional support numbers please visit www.te.com

## 214A311 to 352

### D-Subminiature, Straight Boot

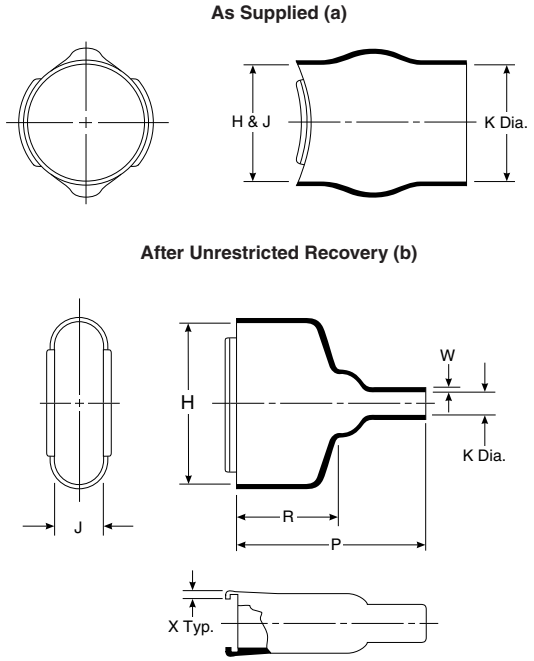


### Applications

Provides strain relief and mechanical protection on D-subminiature connector terminations.

### Materials Available

| Material* | Material Description | Precoating No. | Adhesive Part No.** |
|---|---|---|---|
| -3 | Semirigid polyolefin | /42 or /86 | S-1017 or S-1048 |
| -4 | Flexible polyolefin | /42 or /86 | S-1017 or S-1048 |
| -25 | Fluid-resistant elastomer | /42 or /86 | S-1017 or S-1048 or S-1125 |

*For more information, please see the appropriate material page in this section.
**For more information, please see section 5.

### Product Dimensions

| Part No. | H | | J | | K | | P | R | W | X | This Boot Fits | |
|---|---|---|---|---|---|---|---|---|---|---|---|---|
| | ±5% a | ±5% b | ±5% a | ±5% b | Min. a | Max. b | ±10% b | ±10% b | ±20% b | ±20% b | Cannon/ Cinch | Amphenol Series 17 |
| 214A311 | 16.0 [.63] | 20.3 [.80] | 16.0 [.63] | 10.7 [.42] | 16.0 [.63] | 4.1 [.16] | 33.3 [1.31] | 19.1 [.75] | 1.02 [.04] | 3.05 [.12] | DE-9 | XX09X |
| 214A321 | 19.1 [.75] | 28.2 [1.11] | 19.1 [.75] | 10.7 [.42] | 19.1 [.75] | 5.3 [.21] | 38.9 [1.53] | 22.1 [.87] | 1.02 [.04] | 3.05 [.12] | DA-15 | XX15X |
| 214A332 | 29.2 [1.15] | 42.2 [1.66] | 29.2 [1.15] | 10.7 [.42] | 29.2 [1.15] | 8.1 [.32] | 45.0 [1.77] | 25.4 [1.00] | 1.02 [.04] | 3.05 [.12] | DB-25 | XX25X |
| 214A342 | 34.3 [1.35] | 58.7 [2.31] | 34.3 [1.35] | 10.7 [.42] | 34.3 [1.35] | 8.6 [.34] | 53.3 [2.10] | 28.4 [1.12] | 1.02 [.04] | 3.05 [.12] | DC-37 | XX37X |
| 214A352 | 37.6 [1.48] | 57.9 [2.28] | 37.6 [1.48] | 13.7 [.54] | 37.6 [1.48] | 10.7 [.42] | 61.0 [2.40] | 31.8 [1.25] | 1.02 [.04] | 3.05 [.12] | DD-50 | XX50X |

Note: Coating is optional. As supplied dimensions appearing in table are for uncoated parts. When coating is added, entry diameters will be reduced by 1.5 [.06] max.

| Available in: | Americas | Europe | Asia Pacific |
|---|---|---|---|
| | ■ | ■ | ■ |



Catalog 1654025
Revised 3-13

www.te.com

Dimensions are shown for reference purposes only. Specifications subject to change.

Dimensions are in millimeters unless otherwise specified.

USA: +1 800 522 6752
Asia Pacific: +86 0 400 820 6015
UK: +44 800 267 666

For additional support numbers please visit www.te.com

## 222A111 to 196

### Right-Angled Boot

**As Supplied (a)**

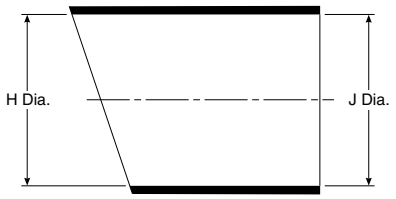


**After Unrestricted Recovery (b)**

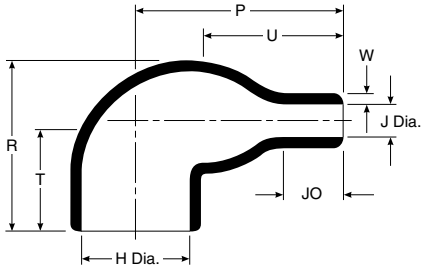


### Applications

Use for mechanical protection and connector-cable strain relief. This family of boots has no lip, so a boot can be installed directly onto the connector accessory thread.

### Materials Available

| Material* | Material Description | Precoating No. | Adhesive Part No.** |
|---|---|---|---|
| -3 | Semirigid polyolefin | /42 or /86 | S-1017 or S-1048 |
| -4 | Flexible polyolefin | /42 or /86 | S-1017 or S-1048 |
| -12 | Fluoroelastomer | N/A | S-1255-04 |
| -25 | Fluid-resistant elastomer | /42 or /86 or /225 | S-1017 or S-1048 or S-1125 |
| -100 | Polyolefin, Zerohal | /86 or/180 | S-1048 or S-1030 |

*For more information, please see the appropriate material page in this section.
**For more information, please see section 5.

### Product Dimensions

| Part No. | H Min. a | H Max. b | J Min. -3, -4, -25 a | J Min. -100 a | J Min. -12 a | J Max. b | P ±10% b | R ±10% b | T ±10% b | U ±10% b | JO ±10% b | W ±20% b |
|---|---|---|---|---|---|---|---|---|---|---|---|---|
| 222A111 | 17.8 [.70] | 7.9 [.31] | 17.8 [.70] | 10.9 [.43] | 9.9 [.39] | 3.8 [.15] | 17.3 [.68] | 20.1 [.79] | — | 11.4 [.45] | 4.3 [.17] | 1.02 [.04] |
| 222A121 | 24.9 [.98] | 10.2 [.40] | 24.9 [.98] | 16.0 [.63] | 18.0 [.71] | 5.3 [.21] | 21.3 [.84] | 22.6 [.89] | — | 14.7 [.58] | 5.8 [.23] | 1.27 [.05] |
| 222A132 | 30.0 [1.18] | 14.2 [.56] | 30.0 [1.18] | 21.1 [.83] | 20.6 [.81] | 6.4 [.25] | 26.9 [1.06] | 26.7 [1.05] | 19.1 [.75] | 17.8 [.70] | 7.1 [.28] | 1.52 [.06] |
| 222A142 | 32.5 [1.28] | 17.3 [.68] | 32.5 [1.28] | 22.9 [.90] | 22.9 [.90] | 6.9 [.27] | 36.6 [1.44] | 30.5 [1.20] | 19.1 [.75] | 24.9 [.98] | 10.2 [.40] | 1.78 [.07] |
| 222A152 | 36.1 [1.42] | 21.8 [.86] | 36.1 [1.42] | 27.4 [1.08] | 26.4 [1.04] | 8.4 [.33] | 43.7 [1.72] | 35.1 [1.38] | 19.1 [.75] | 30.0 [1.18] | 12.7 [.50] | 1.78 [.07] |
| 222A163 | 43.9 [1.73] | 27.4 [1.08] | 43.9 [1.73] | 28.4 [1.12] | 27.4 [1.08] | 9.4 [.37] | 53.6 [2.11] | 43.9 [1.73] | 19.1 [.75] | 34.0 [1.34] | 17.3 [.68] | 2.03 [.08] |
| 222A174 | 53.1 [2.09] | 33.8 [1.33] | 53.1 [2.09] | 48.3 [1.90] | 46.7 [1.84] | 15.0 [.59] | 75.7 [2.98] | 52.8 [2.08] | 25.4 [1.00] | 53.3 [2.10] | 32.0 [1.26] | 3.30 [.13] |
| 222A185 | 67.6 [2.66] | 44.2 [1.74] | 67.6 [2.66] | 58.4 [2.30] | 54.4 [2.14] | 20.3 [.80] | 97.5 [3.84] | 66.0 [2.60] | 25.4 [1.00] | 71.1 [2.80] | 40.6 [1.60] | 3.81 [.15] |
| 222A196 | 87.6 [3.45] | 55.4 [2.18] | 87.6 [3.45] | 68.8 [2.71] | 63.0 [2.48] | 23.4 [.92] | 128.0 [5.04] | 79.2 [3.12] | 25.4 [1.00] | 87.6 [3.45] | 56.4 [2.22] | 4.57 [.18] |

Note: Coating is optional. As supplied dimensions appearing in table are for uncoated parts. When coating is added, entry diameters will be reduced by 1.5 [.06] max.

| Available in: | Americas | Europe | Asia Pacific |
|---|---|---|---|
| | ■ | ■ | ■ |





Catalog 1654025
Revised 3-13

www.te.com

Dimensions are shown for reference purposes only. Specifications subject to change.

Dimensions are in millimeters unless otherwise specified.

USA: +1 800 522 6752
Asia Pacific: +86 0 400 820 6015
UK: +44 800 267 666

For additional support numbers please visit www.te.com

## 222D121 to 196

### Right-Angled, Lipped Boot

**As Supplied (a)**

**After Unrestricted Recovery (b)**

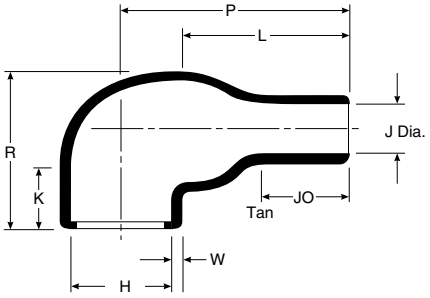


### Applications

Use in conjunction with TE adapters to provide strain relief for harness systems using circular connectors. Boot is compatible with all grooved adapters of the appropriate shell size.

### Materials Available

| Material* | Material Description | Precoating No. | Adhesive Part No.** |
|---|---|---|---|
| -3 | Semirigid polyolefin | /42 or /86 | S-1017 or S-1048 |
| -4 | Flexible polyolefin | /42 or /86 | S-1017 or S-1048 |
| -12 | Fluoroelastomer | N/A | S-1255-04 |
| -25 | Fluid-resistant elastomer | /42 or /86 or /225 | S-1017 or S-1048 or S-1125 |
| -100 | Polyolefin, Zerohal | /86 or /180 | S-1048 or S-1030 |

*For more information, please see the appropriate material page in this section.
**For more information, please see section 5.

### Product Dimensions

| Part No. | H Min. a | H Max. a | J Min. -3, -4, -25 b | J Min. -100 b | J Min. -12 b | J Max. b | P ±10% b | R Ref. b | JO ±10% | W ±20% | K ±10% b | L ±10% b |
|---|---|---|---|---|---|---|---|---|---|---|---|---|
| 222D121 | 23.4 [.92] | 10.4 [.41] | 23.4 [.92] | 14.0 [.55] | 12.4 [.49] | 5.6 [.22] | 21.3 [.84] | 22.6 [.89] | 5.8 [.23] | 1.27 [.05] | 15.2 [.60] | 14.7 [.58] |
| 222D132 | 28.4 [1.12] | 14.2 [.56] | 28.4 [1.12] | 15.0 [.59] | 14.7 [.58] | 6.6 [.26] | 33.8 [1.33] | 27.2 [1.07] | 15.5 [.65] | 1.52 [.06] | 19.1 [.75] | 24.9 [.98] |
| 222D142 | 31.0 [1.22] | 17.8 [.70] | 31.0 [1.22] | 18.0 [.71] | 16.0 [.63] | 7.1 [.28] | 36.6 [1.44] | 31.0 [1.22] | 12.7 [.50] | 1.78 [.07] | 19.1 [.75] | 24.9 [.98] |
| 222D152 | 36.0 [1.42] | 22.4 [.88] | 36.0 [1.42] | 21.0 [.83] | 18.5 [.73] | 8.4 [.33] | 43.7 [1.72] | 35.1 [1.38] | 14.5 [.57] | 1.78 [.07] | 19.1 [.75] | 30.0 [1.18] |
| 222D163 | 42.7 [1.68] | 28.2 [1.11] | 42.7 [1.68] | 25.0 [.98] | 22.1 [.87] | 9.9 [.39] | 53.6 [2.11] | 43.9 [1.73] | 17.5 [.69] | 2.03 [.08] | 19.3 [.76] | 33.0 [1.30] |
| 222D174 | 51.8 [2.04] | 35.1 [1.38] | 51.8 [2.04] | 39.0 [1.54] | 35.3 [1.39] | 15.7 [.62] | 78.0 [3.07] | 52.8 [2.08] | 33.5 [1.32] | 3.30 [.13] | 25.4 [1.00] | 53.8 [2.12] |
| 222D185 | 66.0 [2.60] | 44.5 [1.75] | 66.0 [2.60] | 42.0 [1.65] | 45.7 [1.80] | 20.3 [.80] | 97.5 [3.84] | 66.0 [2.60] | 40.1 [1.58] | 3.81 [.15] | 25.4 [1.00] | 71.1 [2.80] |
| 222D196 | 81.8 [3.22] | 60.5 [2.38] | 81.8 [3.22] | 57.2 [2.25] | 57.2 [2.25] | 25.4 [1.00] | 117.9 [4.64] | 83.8 [3.30] | 38.1 [1.50] | 4.06 [.16] | 25.4 [1.00] | 80.0 [3.15] |

Note: Coating is optional. As supplied dimensions appearing in table are for uncoated parts. When coating is added, entry diameters will be reduced by 1.5 (.06) max.

| Available in: | Americas | Europe | Asia Pacific |
|---|---|---|---|
| | ■ | ■ | ■ |



Catalog 1654025
Revised 3-13

www.te.com

Dimensions are shown for reference purposes only. Specifications subject to change.

Dimensions are in millimeters unless otherwise specified.

USA: +1 800 522 6752
Asia Pacific: +86 0 400 820 6015
UK: +44 800 267 666

For additional support numbers please visit www.te.com

## 222D211 to 299

### Right-Angled, Lipped Boot

**As Supplied (a)**

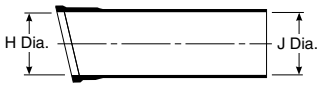


**After Unrestricted Recovery (b)**

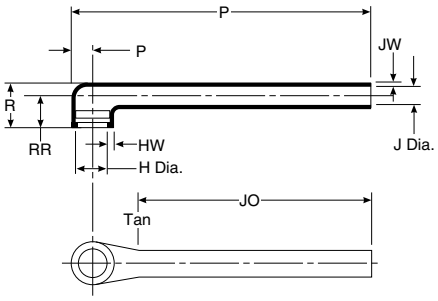


### Applications

Provides strain relief and mechanical protection between cable and connector. Boot is usually used on open-wire-bundle airborne harnesses, or applications where the long tail replaces cable jacketing removed during termination.

### Materials Available

| Material* | Material Description | Precoating No. | Adhesive Part No.** |
|---|---|---|---|
| -3 | Semirigid polyolefin | /42 or /86 | S-1017 or S-1048 |
| -4 | Flexible polyolefin | /42 or /86 | S-1017 or S-1048 |
| -12 | Fluoroelastomer | N/A | S-1255-04 |
| -25 | Fluid-resistant elastomer | /42 or /86 or /225 | S-1017 or S-1048 or S-1125 |
| -100 | Polyolefin, Zerohal | /86 or /180 | S-1048 or S-1030 |

*For more information, please see the appropriate material page in this section.
**For more information, please see section 5.

### Product Dimensions

| Part No. | H Min. a | H Max. b | J Min. -3, -4, -25 a | J Min. -12, -100 b | J Max. b | P ±10% b | R Ref b | JO ±10% b | PP ±10% b | RR 10% b | HW ±20% | JW ±20% |
|---|---|---|---|---|---|---|---|---|---|---|---|---|
| 222D211 | 22.4 [.88] | 11.4 [.45] | 22.4 [.88] | 14.0 [.55] | 6.4 [.25] | 105.2 [4.14] | 18.5 [.73] | 87.6 [3.45] | 6.9 [.27] | 12.4 [.49] | 1.52 [.06] | 1.14 [.045] |
| 222D221 | 25.7 [1.01] | 15.0 [.59] | 25.7 [1.01] | 16.0 [.63] | 7.4 [.29] | 124.0 [4.88] | 19.8 [.78] | 99.1 [3.90] | 8.4 [.33] | 15.0 [.59] | 1.52 [.06] | 1.14 [.045] |
| 222D232 | 29.5 [1.16] | 18.8 [.74] | 29.5 [1.16] | 18.3 [.72] | 8.4 [.33] | 146.3 [5.76] | 20.8 [.82] | 114.3 [4.50] | 10.4 [.41] | 15.5 [.61] | 1.78 [.07] | 1.14 [.045] |
| 222D242 | 34.0 [1.34] | 22.9 [.90] | 34.0 [1.34] | 21.3 [.84] | 9.7 [.38] | 172.2 [6.78] | 21.8 [.86] | 132.6 [5.22] | 12.2 [.48] | 15.7 [.62] | 1.78 [.07] | 1.14 [.045] |
| 222D253 | 37.3 [1.47] | 29.5 [1.16] | 37.3 [1.47] | 23.1 [.91] | 10.4 [.41] | 185.2 [7.29] | 24.4 [.96] | 143.8 [5.66] | 15.5 [.61] | 17.8 [.70] | 2.03 [.08] | 1.14 [.045] |
| 222D263 | 43.7 [1.72] | 34.0 [1.34] | 43.7 [1.72] | 27.2 [1.07] | 12.2 [.48] | 231.6 [8.41] | 27.4 [1.08] | 169.2 [6.66] | 18.3 [.72] | 19.8 [.78] | 2.03 [.08] | 1.14 [.045] |
| 222D274 | 50.0 [1.97] | 41.1 [1.62] | 50.0 [1.97] | 31.5 [1.24] | 14.2 [.56] | 224.5 [8.84] | 29.5 [1.16] | 173.2 [6.82] | 21.1 [.83] | 20.8 [.82] | 2.29 [.09] | 1.40 [.055] |
| 222D285 | 62.7 [2.47] | 47.0 [1.85] | 62.7 [2.47] | 39.1 [1.54] | 17.5 [.69] | 227.3 [8.95] | 33.3 [1.31] | 168.1 [6.62] | 24.1 [.95] | 23.4 [.92] | 2.54 [.10] | 1.40 [.055] |
| 222D296 | 69.3 [2.73] | 59.7 [2.35] | 69.3 [2.73] | 43.2 [1.70] | 19.6 [.77] | 233.4 [9.19] | 35.1 [1.38] | 157.2 [6.19] | 30.0 [1.18] | 23.6 [.93] | 2.54 [.10] | 1.40 [.055] |
| 222D299 | 81.8 [3.22] | 67.1 [2.64] | 81.8 [3.22] | 51.1 [2.01] | 22.9 [.90] | 237.0 [9.33] | 44.5 [1.75] | 151.1 [5.95] | 33.3 [1.31] | 31.2 [1.23] | 2.54 [.10] | 1.40 [.055] |

Note: Coating is optional. As supplied dimensions appearing in table are for uncoated parts. When coating is added, entry diameters will be reduced by 1.5 [.06] max.

| Available in: | Americas | Europe | Asia Pacific |
|---|---|---|---|
| | ■ | ■ | ■ |





Catalog 1654025
Revised 3-13

www.te.com

Dimensions are shown for reference purposes only. Specifications subject to change.

Dimensions are in millimeters unless otherwise specified.

USA: +1 800 522 6752
Asia Pacific: +86 0 400 820 6015
UK: +44 800 267 666

For additional support numbers please visit www.te.com

## 222D921 to 963

### Right-Angled, Lipped Boot

**As Supplied (a)**

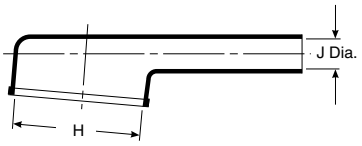


**After Unrestricted Recovery (b)**

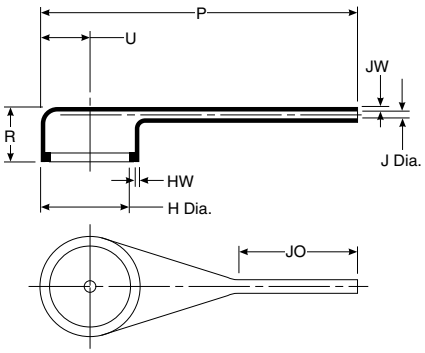


### Applications

Provides strain relief and mechanical protection between cable and connector. It is used in applications where only a small number of the available contacts are utilized, resulting in a high ratio between the adapter and cable diameters.

### Materials Available

| Material* | Material Description | Precoating No. | Adhesive Part No.** |
|---|---|---|---|
| -3 | Semirigid polyolefin | /42 or /86 | S-1017 or S-1048 |
| -4 | Flexible polyolefin | /42 or /86 | S-1017 or S-1048 |
| -12 | Fluoroelastomer | N/A | S-1255-04 |
| -25 | Fluid-resistant elastomer | /42 or /86 or /225 | S-1017 or S-1048 or S-1125 |
| -100 | Polyolefin, Zerohal | /86 or /180 | S-1048 or S-1030 |

### Product Dimensions

| Part No. | H | | J | | | P | R | U | JO | HW | JW |
|---|---|---|---|---|---|---|---|---|---|---|---|
| | Min. a | Max. b | Min. -3, -4, -25 a | Min. -12, -100 a | Max. b | ±10% b | Ref. b | ±10% b | ±10% b | ±20% b | ±20% b |
| 222D921 | 19.3 [.76] | 13.0 [.51] | 6.3 [.25] | 4.5 [.18] | 2.1 [.08] | 44.5 [1.75] | 16.3 [.64] | 5.6 [.22] | 21.8 [.86] | 1.52 [.06] | 1.14 [.045] |
| 222D932 | 26.1 [1.03] | 19.1 [.75] | 7.6 [.30] | 5.6 [.22] | 2.6 [.10] | 67.3 [2.65] | 18.0 [.71] | 8.4 [.33] | 29.2 [1.15] | 1.78 [.07] | 1.14 [.045] |
| 222D953 | 34.2 [1.35] | 26.0 [1.02] | 9.6 [.38] | 6.6 [.26] | 3.0 [.12] | 81.3 [3.20] | 18.8 [.74] | 11.4 [.45] | 36.3 [1.39] | 1.78 [.07] | 1.14 [.045] |
| 222D963 | 43.6 [1.72] | 34.1 [1.34] | 11.4 [.45] | 7.8 [.31] | 3.6 [.14] | 115.6 [4.55] | 21.3 [.84] | 15.5 [.61] | 47.0 [1.85] | 1.78 [.07] | 1.14 [.045] |

Note: Coating is optional. As supplied dimensions appearing in table are for uncoated parts. When coating is added, entry diameters will be reduced by 1.5 mm [.06"] max.

| Available in: | Americas | Europe | Asia Pacific |
|---|---|---|---|
| | ■ | ■ | ■ |



Catalog 1654025
Revised 3-13

www.te.com

Dimensions are shown for reference purposes only. Specifications subject to change.

Dimensions are in millimeters unless otherwise specified.

USA: +1 800 522 6752
Asia Pacific: +86 0 400 820 6015
UK: +44 800 267 666

For additional support numbers please visit www.te.com

## 222F211 to 285

### Right-Angled, Lipped Boot

**As Supplied (a)**

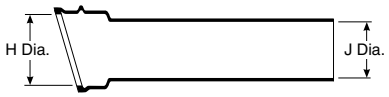


**After Unrestricted Recovery (b)**

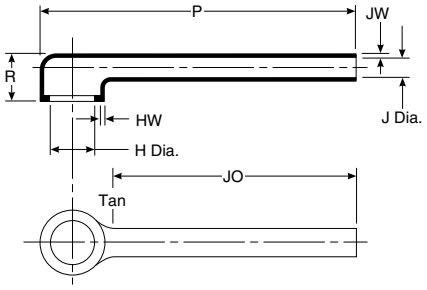


### Applications

Use in conjunction with TE adapters to provide strain relief for harness systems using circular connectors. Boot is compatible with all grooved adapters of the appropriate shell size.

### Materials Available

| Material* | Material Description | Precoating No. | Adhesive Part No.** |
|---|---|---|---|
| -50 | Fluoroelastomer polymer blend | N/A | S-1125 |
| -51 | Elastomer polymer blend | /164 | S-1124 |
| -71 | Flexible polyolefin | /42 or /86 | S-1017 or S-1048 |

*For more information, please see the appropriate material page in this section.
**For more information, please see section 5.

### Product Dimensions

| Part No. | H Min. a | H Max. b | J Min. a | J Max. b | P ±10% b | R ±10% b | JO ±10% b | HW +.06 to -.03 b | JW ±.03 b |
|---|---|---|---|---|---|---|---|---|---|
| 222F211 | 23.9 [.94] | 9.9 [.39] | 17.3 [.68] | 6.6 [.26] | 105.2 [4.14] | 18.5 [.73] | 87.6 [3.45] | 1.52 [.06] | 1.52 [.06] |
| 222F221 | 27.2 [1.07] | 13.2 [.52] | 20.8 [.82] | 7.6 [.30] | 124.0 [4.88] | 19.8 [.78] | 99.1 [3.90] | 1.52 [.06] | 1.52 [.06] |
| 222F232 | 31.0 [1.22] | 18.5 [.73] | 24.4 [.96] | 8.9 [.35] | 146.3 [5.76] | 20.8 [.82] | 114.3 [4.50] | 1.78 [.07] | 1.52 [.06] |
| 222F242 | 35.6 [1.40] | 22.1 [.87] | 28.7 [1.13] | 10.2 [.40] | 172.2 [6.78] | 21.8 [.86] | 132.6 [5.22] | 1.78 [.07] | 1.52 [.06] |
| 222F253 | 38.9 [1.53] | 28.2 [1.11] | 31.5 [1.24] | 10.9 [.43] | 185.2 [7.29] | 24.4 [.96] | 143.8 [5.66] | 1.78 [.07] | 1.52 [.06] |
| 222F263 | 45.2 [1.78] | 32.3 [1.27] | 38.4 [1.51] | 12.7 [.50] | 213.6 [8.41] | 27.4 [1.08] | 169.2 [6.66] | 1.78 [.07] | 1.52 [.06] |
| 222F274 | 51.6 [2.03] | 41.1 [1.62] | 44.5 [1.75] | 15.0 [.59] | 224.5 [8.84] | 29.5 [1.16] | 173.2 [6.82] | 1.78 [.07] | 1.78 [.07] |
| 222F285 | 62.7 [2.47] | 42.9 [1.69] | 47.2 [1.86] | 17.5 [.69] | 227.3 [8.95] | 33.3 [1.31] | 168.1 [6.62] | 2.03 [.08] | 1.78 [.07] |

Note: Coating is optional. As supplied dimensions appearing in table are for uncoated parts. When coating is added, entry diameters will be reduced by 1.5 [.06] max.

| Available in: | Americas | Europe | Asia Pacific |
|---|---|---|---|
| | ■ | ■ | ■ |





Catalog 1654025
Revised 3-13

www.te.com

Dimensions are shown for reference purposes only. Specifications subject to change.

Dimensions are in millimeters unless otherwise specified.

USA: +1 800 522 6752
Asia Pacific: +86 0 400 820 6015
UK: +44 800 267 666

For additional support numbers please visit www.te.com

## 222K121 to 185

### Right-Angled, Lipped Boot

**As Supplied (a)**

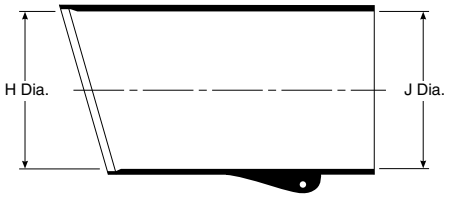


**After Unrestricted Recovery (b)**

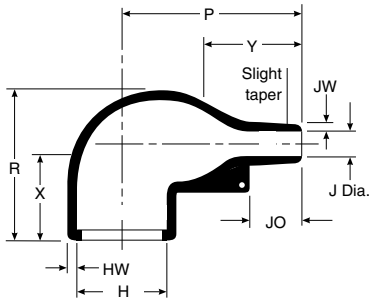


For eyelet clip, order CS-1858 option.

### Applications

Use in conjunction with TE adapters to provide strain relief for harness systems using circular connectors. Boot is compatible with all grooved adapters of the appropriate shell size.

### Materials Available

| Material* | Material Description | Precoating No. | Adhesive Part No.** |
|---|---|---|---|
| -3 | Semirigid polyolefin | /42 or /86 | S-1017 or S-1048 |
| -4 | Flexible polyolefin | /42 or /86 | S-1017 or S-1048 |
| -12 | Fluoroelastomer | N/A | S-1255-04 |
| -25 | Fluid-resistant elastomer | /42 or /86 or /225 | S-1017 or S-1048 or S-1125 |
| -100 | Polyolefin, Zerohal | /86 or /180 | S-1048 or S-1030 |

*For more information, please see the appropriate material page in this section.
**For more information, please see section 5.

### Product Dimensions

| Part No. | H Min. -3, -4, -12, -25 a | H Min. -100 a | H Max. b | J Min. -3, -4, -25 a | J Min. -12, -100 a | J Max. b | P ±10% b | R ±10% b | JO ±10% b | HW ±20% b | JW ±20% b | X ±20% b | Y ±20% b |
|---|---|---|---|---|---|---|---|---|---|---|---|---|---|
| 222K121 | 24.0 [.95] | 24.0 [.95] | 10.4 [.41] | 24.0 [.95] | 14.0 [.55] | 5.6 [.22] | 25.0 [.98] | 25.0 [.98] | 8.5 [.33] | 1.3 [.05] | .41 [.016] | 18.0 [.71] | 16.0 [.63] |
| 222K132 | 30.0 [1.18] | 30.0 [1.18] | 14.2 [.56] | 30.0 [1.18] | 15.0 [.59] | 5.9 [.23] | 32.0 [1.26] | 27.0 [1.06] | 8.5 [.33] | 1.5 [.06] | .61 [.024] | 18.0 [.71] | 20.0 [.79] |
| 222K142 | 31.0 [1.22] | 31.0 [1.22] | 18.0 [.71] | 31.0 [1.22] | 18.0 [.71] | 7.1 [.28] | 39.0 [1.54] | 31.0 [1.22] | 15.0 [.59] | 1.8 [.07] | .81 [.032] | 18.0 [.71] | 20.0 [.79] |
| 222K152 | 36.0 [1.42] | 36.0 [1.42] | 22.4 [.88] | 36.0 [1.42] | 21.0 [.83] | 8.4 [.33] | 46.0 [1.81] | 38.0 [1.50] | 18.0 [.63] | 1.8 [.07] | .81 [.032] | 25.0 [.98] | 25.0 [.98] |
| 222K163 | 43.0 [1.69] | 43.0 [1.69] | 28.2 [1.11] | 43.0 [1.69] | 25.0 [.98] | 9.9 [.39] | 55.0 [2.17] | 45.0 [1.77] | 17.5 [.69] | 2.0 [.08] | .81 [.032] | 25.0 [.98] | 30.0 [1.18] |
| 222K174 | 60.0 [2.36] | 52.0 [2.05] | 35.1 [1.38] | 60.0 [2.36] | 39.0 [1.54] | 15.7 [.62] | 80.0 [3.15] | 54.0 [2.13] | 32.0 [1.26] | 3.3 [.13] | 1.02 [.040] | 25.0 [.98] | 45.0 [1.77] |
| 222K185 | 66.0 [2.60] | 66.0 [2.60] | 44.5 [1.75] | 66.0 [2.60] | 42.0 [1.65] | 16.8 [.66] | 108.0 [4.25] | 68.0 [2.68] | 48.0 [1.89] | 3.8 [.15] | 1.63 [.064] | 35.0 [1.38] | 70.0 [2.76] |

Note: Coating is optional. As supplied dimensions appearing in table are for uncoated parts. When coating is added, entry diameters will be reduced by 1.5 [.06] max.

| Available in: | Americas | Europe | Asia Pacific |
|---|---|---|---|
| | ■ | ■ | ■ |



Dimensions are shown for reference purposes only. Specifications subject to change.

Dimensions are in millimeters unless otherwise specified.

USA: +1 800 522 6752
Asia Pacific: +86 0 400 820 6015
UK: +44 800 267 666

For additional support numbers please visit www.te.com

## 234A011 to 071

### D-Subminiature, Right-Angled Boot

**As Supplied (a)**

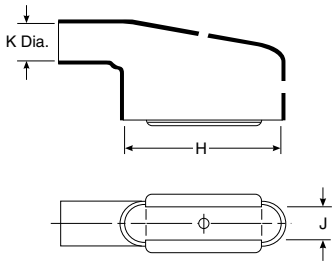


**After Unrestricted Recovery (b)**

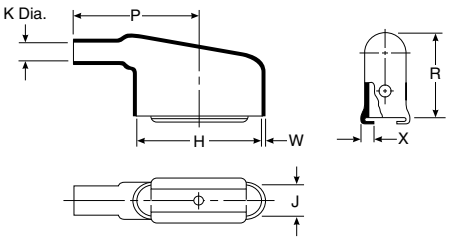


### Applications

Provides strain relief and mechanical protection on D-subminiature connector terminations.

### Materials Available

| Material* | Material Description | Precoating No. | Adhesive Part No.** |
|---|---|---|---|
| -3 | Semirigid polyolefin | /42 or /86 | S-1017 or S-1048 |
| -4 | Flexible polyolefin | /42 or /86 | S-1017 or S-1048 |
| -12 | Fluoroelastomer | N/A | S-1255-04 |
| -25 | Fluid-resistant elastomer | /42 or /86 or /225 | S-1017 or S-1048 or S-1125 |
| -100 | Polyolefin, Zerohal | /86 or /180 | S-1048 or S-1030 |

*For more information, please see the appropriate material page in this section.
**For more information, please see section 5.

### Product Dimensions

| Part No. | H ±5% a | H ±5% b | J ±5% a | J ±5% b | K Min. a | K Max. b | P ±10% b | R ±10% b | W ±20% b | X ±20% b | This Boot Fits Cannon/ Cinch |
|---|---|---|---|---|---|---|---|---|---|---|---|
| 234A011 | 20.3 [.80] | 20.3 [.80] | 10.7 [.42] | 10.7 [.42] | 7.9 [.31] | 4.1 [.16] | 25.9 [1.02] | 21.6 [.85] | 1.02 [.04] | 3.05 [.12] | DE-9 |
| 234A021 | 28.2 [1.11] | 28.2 [1.11] | 10.7 [.42] | 10.7 [.42] | 10.2 [.40] | 5.3 [.21] | 30.7 [1.21] | 24.6 [.97] | 1.02 [.04] | 3.05 [.12] | DA-15 |
| 234A032 | 42.2 [1.66] | 42.2 [1.66] | 10.7 [.42] | 10.7 [.42] | 14.0 [.55] | 7.4 [.29] | 42.9 [1.69] | 27.9 [1.10] | 1.02 [.04] | 3.05 [.12] | DB-25 |
| 234A042 | 58.7 [2.31] | 58.7 [2.31] | 10.7 [.42] | 10.7 [.42] | 17.3 [.68] | 8.6 [.34] | 53.3 [2.10] | 30.5 [1.20] | 1.02 [.04] | 3.05 [.12] | DC-37 |
| 234A052 | 57.9 [2.28] | 57.9 [2.28] | 13.7 [.54] | 13.7 [.54] | 19.1 [.75] | 10.7 [.42] | 55.9 [2.20] | 32.3 [1.27] | 1.02 [.04] | 3.05 [.12] | DD-50 |
| 234A061 | 20.3 [.80] | 20.3 [.80] | 10.7 [.42] | 10.7 [.42] | 7.9 [.31] | 3.8 [.15] | 25.9 [1.02] | 18.5 [.73] | 1.02 [.04] | 3.05 [.12] | DE-9 |
| 234A071 | 28.2 [1.11] | 28.2 [1.11] | 10.7 [.42] | 10.7 [.42] | 10.2 [.40] | 5.1 [.20] | 30.7 [1.21] | 19.8 [.78] | 1.02 [.04] | 3.05 [.12] | DA-15 |

Note: Coating is optional. As supplied dimensions appearing in table are for uncoated parts. When coating is added, entry diameters will be reduced by 1.5 (.06) max.

| Available in: | Americas | Europe | Asia Pacific |
|---|---|---|---|
| | ■ | ■ | ■ |





Catalog 1654025
Revised 3-13

www.te.com

Dimensions are shown for reference purposes only. Specifications subject to change.

Dimensions are in millimeters unless otherwise specified.

USA: +1 800 522 6752
Asia Pacific: +86 0 400 820 6015
UK: +44 800 267 666

For additional support numbers please visit www.te.com

## 234A111 to 152

### D-Subminiature, Side-Entry Boot

**As Supplied (a)**

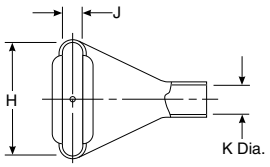


**After Unrestricted Recovery (b)**

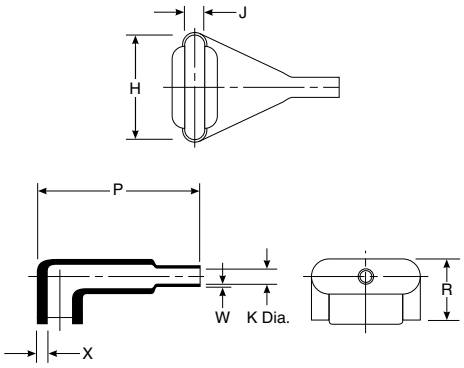


### Applications

Provides strain relief and mechanical protection on D-subminiature connector terminations.

### Materials Available

| Material* | Material Description | Precoating No. | Adhesive Part No.** |
|---|---|---|---|
| -3 | Semirigid polyolefin | /42 or /86 | S-1017 or S-1048 |
| -4 | Flexible polyolefin | /42 or /86 | S-1017 or S-1048 |
| -25 | Fluid-resistant elastomer | /42 or /86 or /225 | S-1017 or S-1048 or S-1125 |

*For more information, please see the appropriate material page in this section.
**For more information, please see section 5.

### Product Dimensions

| Part No. | H ±5% a | H ±5% b | J ±5% a | J ±5% b | K Min. a | K Max. b | P ±10% b | R ±10% b | W ±20% b | X ±20% b | This Boot Fits Cannon/Cinch |
|---|---|---|---|---|---|---|---|---|---|---|---|
| 234A111 | 20.3 [.80] | 20.3 [.80] | 10.7 [.42] | 10.7 [.42] | 7.9 [.31] | 4.1 [.16] | 27.9 [1.10] | 18.5 [.73] | 1.02 [.04] | 3.05 [.12] | DE-9 |
| 234A121 | 28.2 [1.11] | 28.2 [1.11] | 10.7 [.42] | 10.7 [.42] | 10.2 [.40] | 5.3 [.21] | 35.1 [1.38] | 18.8 [.74] | 1.02 [.04] | 3.05 [.12] | DA-15 |
| 234A132 | 42.2 [1.66] | 42.2 [1.66] | 10.7 [.42] | 10.7 [.42] | 14.0 [.55] | 6.4 [.25] | 47.5 [1.87] | 20.1 [.79] | 1.02 [.04] | 3.05 [.12] | DB-25 |
| 234A142 | 58.7 [2.31] | 58.7 [2.31] | 10.7 [.42] | 10.7 [.42] | 17.3 [.68] | 7.9 [.31] | 59.7 [2.35] | 20.1 [.79] | 1.02 [.04] | 3.05 [.12] | DC-37 |
| 234A152 | 57.9 [2.28] | 57.9 [2.28] | 13.7 [.54] | 13.7 [.54] | 19.1 [.75] | 9.1 [.36] | 63.2 [2.49] | 26.4 [1.04] | 1.02 [.04] | 3.05 [.12] | DD-50 |

Note: Coating is optional. As supplied dimensions appearing in table are for uncoated parts. When coating is added, entry diameters will be reduced by 1.5 [.06] max.

| Available in: | Americas | Europe | Asia Pacific |
|---|---|---|---|
| | ■ | ■ | ■ |



Catalog 1654025
Revised 3-13

www.te.com

Dimensions are shown for reference purposes only. Specifications subject to change.

Dimensions are in millimeters unless otherwise specified.

USA: +1 800 522 6752
Asia Pacific: +86 0 400 820 6015
UK: +44 800 267 666

For additional support numbers please visit www.te.com

## 234A611 to 671

### D-Subminiature, 90° End-Entry Boot

**As Supplied (a)**

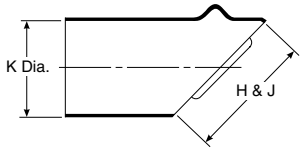


**After Unrestricted Recovery (b)**

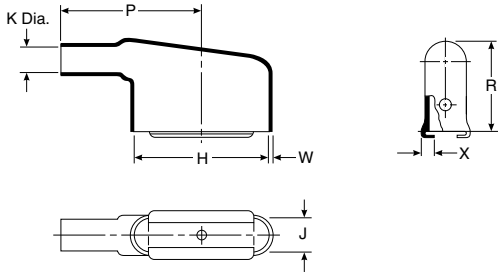


### Applications

Provides strain relief and mechanical protection on D-subminiature connector terminations.

### Materials Available

| Material* | Material Description | Precoating No. | Adhesive Part No.** |
|---|---|---|---|
| -3 | Semirigid polyolefin | /42 or /86 | S-1017 or S-1048 |
| -4 | Flexible polyolefin | /42 or /86 | S-1017 or S-1048 |
| -25 | Fluid-resistant elastomer | /42 or /86 | S-1017 or S-1048 or S-1125 |

*For more information, please see the appropriate material page in this section.
**For more information, please see section 5.

### Product Dimensions

| Part No. | H ±5% a | H ±5% b | J ±5% a | J ±5% b | K Min. a | K Max. b | P ±10% b | R ±10% b | W ±20% b | X ±20% b | This Boot Fits Cannon/Cinch |
|---|---|---|---|---|---|---|---|---|---|---|---|
| 234A611 | 16.0 [.63] | 20.3 [.80] | 16.0 [.63] | 10.7[.42] | 16.0 [.63] | 4.1 [.16] | 25.9 [1.02] | 21.6 [.85] | 1.02 [.04] | 3.05 [.12] | DE-9 |
| 234A621 | 19.1 [.75] | 28.2 [1.11] | 19.1 [.75] | 10.7 [.42] | 19.1 [.75] | 5.3 [.21] | 30.7 [1.21] | 24.6 [.97] | 1.02 [.04] | 3.05 [.12] | DA-15 |
| 234A632 | 29.2 [1.15] | 42.2 [1.66] | 29.2 [1.15] | 10.7 [.42] | 29.2 [1.15] | 7.4 [.29] | 42.9 [1.69] | 27.9 [1.10] | 1.02 [.04] | 3.05 [.12] | DB-25 |
| 234A642 | 34.3 [1.35] | 58.7 [2.31] | 34.3 [1.35] | 10.7 [.42] | 34.3 [1.35] | 8.6 [.34] | 53.3 [2.10] | 30.5 [1.20] | 1.02 [.04] | 3.05 [.12] | DC-37 |
| 234A652 | 37.6 [1.48] | 57.9 [2.28] | 37.6 [1.48] | 13.7 [.54] | 37.6 [1.48] | 10.7 [.42] | 55.9 [2.20] | 32.3 [1.27] | 1.02 [.04] | 3.05 [.12] | DD-50 |
| 234A661 | 16.0 [.63] | 20.3 [.80] | 16.0 [.63] | 10.7 [.42] | 16.0 [.63] | 3.8 [.15] | 25.9 [1.02] | 18.5 [.73] | 1.02 [.04] | 3.05 [.12] | DE-9 |
| 234A671 | 19.1 [.75] | 28.2 [1.11] | 19.1 [.75] | 10.7 [.42] | 19.1 [.75] | 5.1 [.20] | 30.7 [1.21] | 19.8 [.78] | 1.02 [.04] | 3.05 [.12] | DA-15 |

Note: Coating is optional. As supplied dimensions appearing in table are for uncoated parts. When coating is added, entry diameters will be reduced by 1.5 [.06] max.

| Available in: | Americas | Europe | Asia Pacific |
|---|---|---|---|
| | ■ | ■ | ■ |







Dimensions are shown for reference purposes only. Specifications subject to change.

Dimensions are in millimeters unless otherwise specified.

USA: +1 800 522 6752
Asia Pacific: +86 0 400 820 6015
UK: +44 800 267 666

For additional support numbers please visit www.te.com

## 242W042 to 063

### 45° Angled Boot

**As Supplied (a)**

**After Unrestricted Recovery (b)**

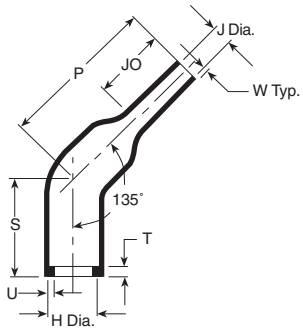

### Applications

Designed for use in the aggressive environments found adjacent to engines in automotive, aerospace and military applications, heat-shrinkable molded parts provide rugged protection, strain relief and a full 360°environmental seal. The introduction of the 45° option means there is now a choice of three routes to the connector for closer positioning and greater design freedom.

### Compatibility Chart

| Material Dash Number | Material Description | Precoating No. | Adhesive Part No. |
|---|---|---|---|
| -3 | Polyolefin, semirigid | /42, /86 | S-1017 or S-1048 |
| -4 | Polyolefin, flexible | /42, /86 | S-1017 or S-1048 |
| -12 | Fluoroelastomer | N/A | S-1255-04 |
| -25 | Elastomer, fluid-resistant | /42, /86, /225 | S-1017, S-1125 or S-1048 |
| -100 | Polyolefin, Zerohal | /180 | S-1030 |

### Product Dimensions

| Part No. | H | | J | | | P | S | T | U | JO | W |
|---|---|---|---|---|---|---|---|---|---|---|---|
| | Min. a | Max. b | Min. a -12, -100 | Min. a -3, -4, -25 | Max. b -12, -100, -3, -25 | ± 10% b | ± 10% b | ± 10% b | ± 10% b | ± 10% b | ± 20% b |
| 242W042 | 31.0 [1.22] | 17.9 [.70] | 18.0 [.71] | 31.0 [1.22] | 7.0 [.28] | 55.0 [2.17] | 35.0 [1.38] | 3.5 [.14] | 2.0 [.08] | 25.0 [.98] | 1.8 [.07] |
| 242W053 | 36.0 [1.42] | 22.1 [.87] | 21.0 [.83] | 36.0 [1.42] | 8.4 [.33] | 60.0 [2.36] | 40.0 [1.58] | 3.5 [.14] | 2.0 [.08] | 30.0 [1.18] | 2.0 [.08] |
| 242W063 | 43.0 [1.69] | 27.9 [1.10] | 25.0 [.99] | 43.0 [1.69] | 9.9 [.39] | 65.0 [2.56] | 45.0 [1.77] | 3.5 [.14] | 2.0 [.08] | 35.0 [1.38] | 2.2 [.09] |

As supplied dimensions are for uncoated parts, when coating is added, entry diameters will reduce by 1.5 [.06] max.

| Available in: | Americas | Europe | Asia Pacific |
|---|---|---|---|
| | ■ | ■ | ■ |



Dimensions are shown for reference purposes only. Specifications subject to change.

Dimensions are in millimeters unless otherwise specified.

USA: +1 800 522 6752
Asia Pacific: +86 0 400 820 6015
UK: +44 800 267 666

For additional support numbers please visit www.te.com

## Micro Molded Shapes

### Micro Molded Heat-Shrink Shapes

Connector manufacturers are increasingly offering smaller high performance, rugged, micro circular connectors for use in wiring harnesses in both civilian and defense markets.

The range of small heat-shrink molded shapes from TE Connectivity (TE) has evolved in order to cater for these requirements for smaller, lighter-weight products that still offer a great balance of protection properties at the connector-wire interface.

Produced in a variety of shapes and materials, TE's range of Raychem branded molded shapes are supplied in an expanded form. On the application of heat, they shrink to a pre-determined size and shape, providing a tough, protective covering for the components over which they are installed.

### Product Facts

- **Small size**
- **Supplied in expanded form**
- **Adhesive lined options**
- **Strain relief**
- **Available in a range of different cross-linked polymeric materials**

### Benefits

- **Weight and space savings**
- **Facilitates installation**
- **Environmental sealing against fluid and dirt ingression**
- **Provides protection against mechanical abuse at the cable-connector interface**
- **Suitable for a wide range of application and environmental requirements for low fire hazard, flame retardance, high temperatures and fluid resistant characteristics. Applications from underwater to outer space, in military vehicles to cars, rail and mass transit**





Catalog 1654025
Revised 3-13

www.te.com

Dimensions are shown for reference purposes only. Specifications subject to change.

Dimensions are in millimeters unless otherwise specified.

USA: +1 800 522 6752
Asia Pacific: +86 0 400 820 6015
UK: +44 800 267 666

For additional support numbers please visit www.te.com

## Micro Molded Shapes (Continued)

### Material

**-25 Molded Part Material**

A heat-shrinkable, semi-rigid, fluid and temperature resistant, elastomeric molding compound, designed to offer excellent performance in harsh environments. Ideal for use in military and commercial vehicles where high temperatures and long-term exposure to hot fluids is expected.

**-100 Molded Part Material***

A heat-shrinkable, semi-flexible, low-fire-hazard molding compound designed to offer excellent fire safety characteristics combined with low smoke and low acid gas emission. 100 also exhibits good mechanical and fluid resistance properties.

**-12 Molded Part Material***

A high-temperature, heat-shrinkable, flexible, flame-retarded, fluoroelastomeric molding compound with excellent resistance to long-term fluid immersion and heat exposure.

**-3 Molded Part Material***

A general purpose, heat-shrinkable semi rigid and flame retarded polyolefin molding compound with good resistance to fluids and heat.

**Min** = Minimum inner diameter of the supplied expanded shape. We would supply to this dimension or greater.

**Max** = Recovered dimensions after heating.

The recommended usage range for the part is from 10% less than minimum expanded inside diameter to 10% greater than the maximum recovered inside diameter.

For more information please search by Part Number on: **www.te.com/adm** or contact our TE sales representatives.

Materials:
*As Supplied/Expanded dimensions may be slightly reduced due to the nature of the material.
After recovery sizes are not affected.

## Micro Molded Shapes (Continued)

### Selection Guide

As Supplied (a)

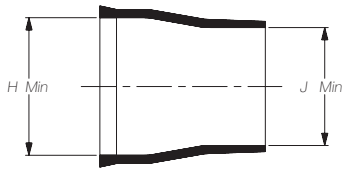


After Recovery (b)

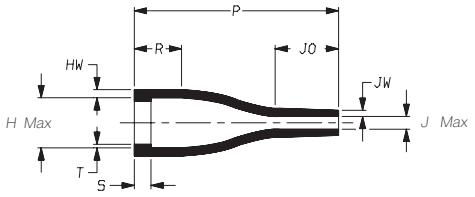


**Dimensions** in millimeters (in inches, for reference)

| | As Supplied | | After Recovery | | | | | | | | |
|---|---|---|---|---|---|---|---|---|---|---|---|
| Part Number | H Min. a | J Min. a | H Max. b | J Max. b | P ±10% b | R ±10% b | S ±10% b | T ±10% b | JO ±10% b | HW ±20% b | JW ±20% b |
| 204W201 | 10 [.39] | 9.0 [.35] | 5.2 [.20] | 1.5 [.06] | 20 [.79] | 4.0 [.16] | 0.8 [.03] | 0.35 [.01] | 6.6 [.26] | 0.8 [.03] | 0.6 [.02] |

As Supplied (a)

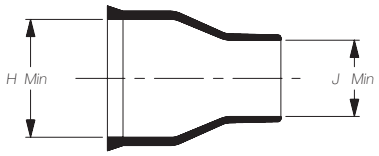


After Recovery (b)

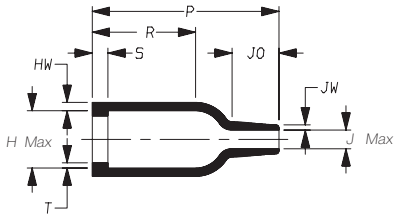


**Dimensions** in millimeters (in inches, for reference)

| | As Supplied | | After Recovery | | | | | | | | |
|---|---|---|---|---|---|---|---|---|---|---|---|
| Part Number | H Min. a | J Min. a | H Max. b | J Max. b | P ±10% b | R ±10% b | S ±10% b | T ±10% b | JO ±10% b | HW ±20% b | JW ±20% b |
| 203W301-*-G02 | 10 [.39] | 6.0 [.24] | 5.8 [.23] | 2.2 [.09] | 19 [.75] | 11 [.43] | 1.5 [.06] | 0.5 [.02] | 4.5 [.18] | 0.8 [.03] | 0.5 [.02] |

As Supplied (a)

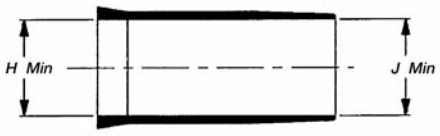


After Recovery (b)

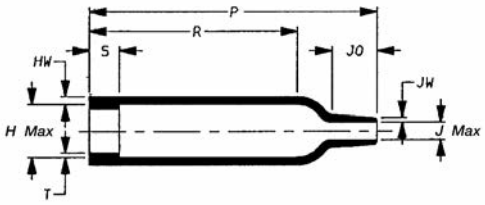


**Dimensions** in millimeters (in inches, for reference)

| | As Supplied | | After Recovery | | | | | | | | |
|---|---|---|---|---|---|---|---|---|---|---|---|
| Part Number | H Min. a | J Min. a | H Max. b | J Max. b | P ±10% b | R ±10% b | S ±10% b | T ±10% b | JO ±10% b | HW ±20% b | JW ±20% b |
| 203W301 | 10 [.39] | 10 [.39] | 5.8 [.23] | 2.2 [.09] | 29 [1.14] | 21 [.83] | 3.0 [.12] | 0.5 [.02] | 4.5 [.18] | 0.8 [.03] | 0.5 [.02] |







Dimensions are shown for reference purposes only. Specifications subject to change.

Dimensions are in millimeters unless otherwise specified.

USA: +1 800 522 6752
Asia Pacific: +86 0 400 820 6015
UK: +44 800 267 666

For additional support numbers please visit www.te.com

## Micro Molded Shapes (Continued)

### Selection Guide

As Supplied (a)

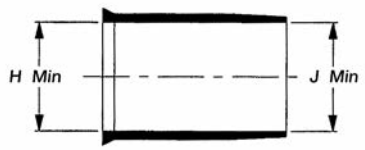


After Recovery (b)

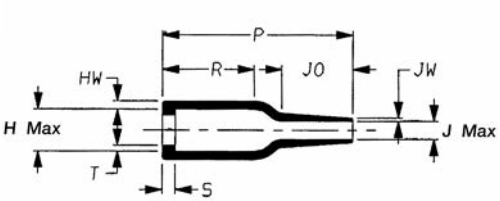


**Dimensions** in millimeters (in inches, for reference)

| | As Supplied | | After Recovery | | | | | | | | |
|---|---|---|---|---|---|---|---|---|---|---|---|
| Part Number | H Min. a | J Min. a | H Max. b | J Max. b | P ±10% b | R ±10% b | S ±10% b | T ±10% b | JO ±10% b | HW ±20% b | JW ±20% b |
| 202K111-*-01 | 17 [.67] | 17 [.67] | 6.9 [.27] | 3.0 [.12] | 29 [1.14] | 14 [.55] | 1.7 [.07] | 0.9 [.04] | 10.8 [.43] | 1.3 [.05] | 0.7 [.03] |

As Supplied (a)

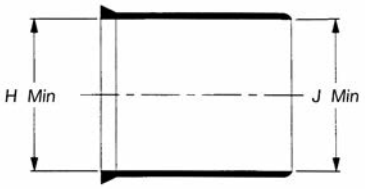


After Recovery (b)

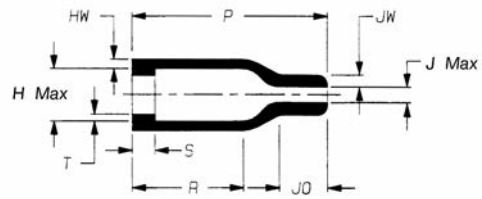


**Dimensions** in millimeters (in inches, for reference)

| | As Supplied | | After Recovery | | | | | | | | |
|---|---|---|---|---|---|---|---|---|---|---|---|
| Part Number | H Min. a | J Min. a | H Max. b | J Max. b | P ±10% b | R ±10% b | S ±10% b | T ±10% b | JO ±10% b | JW ±20% b | HW ±20% b |
| 202A111-*-G07 | 17 [.67] | 17 [.67] | 7.9 [.31] | 2.2 [.09] | 25 [.98] | 14 [.55] | 3.0 [.12] | 1.0 [.04] | 6.0 [.24] | 1.7 [.07] | 1.0 [.04] |

As Supplied (a)

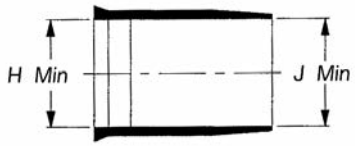


After Recovery (b)

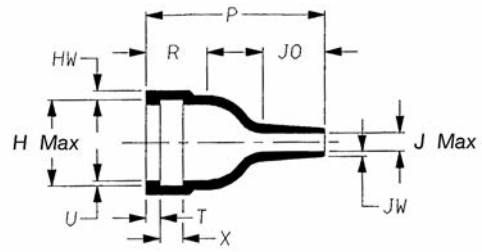


**Dimensions** in millimeters (in inches, for reference)

| | As Supplied | | After Recovery | | | | | | | | | |
|---|---|---|---|---|---|---|---|---|---|---|---|---|
| Part Number | H Min. a | J Min. a | H Max. b | J Max. b | P ±10% b | R ±10% b | T ±10% b | U ±10% b | X ±10% b | JO ±10% b | HW ±20% b | JW ±20% b |
| 204W221 | 11 [.43] | 11 [.43] | 9.3 [.37] | 2.1 [.08] | 19 [.75] | 6.5 [.26] | 1.5 [.06] | 0.55 [.02] | 2.4 [.09] | 6.6 [.26] | 1.1 [.04] | 0.5 [.02] |



Dimensions are shown for reference purposes only. Specifications subject to change.

Dimensions are in millimeters unless otherwise specified.

USA: +1 800 522 6752
Asia Pacific: +86 0 400 820 6015
UK: +44 800 267 666

For additional support numbers please visit www.te.com

## Micro Molded Shapes (Continued)

### Selection Guide

As Supplied (a)

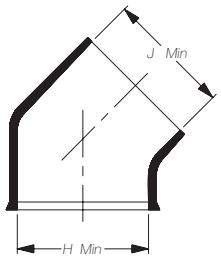


After Recovery (b)

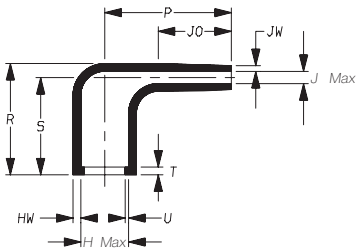


**Dimensions** in millimeters (in inches, for reference)

| | As Supplied | | After Recovery | | | | | | | | | |
|---|---|---|---|---|---|---|---|---|---|---|---|---|
| Part Number | H Min. a | J Min. a | H Max. b | J Max. b | P ±10% b | R ±10% b | S ±10% b | T ±10% b | U ±10% b | JO ±10% b | HW ±20% b | JW ±20% b |
| 224W201 | 11 [.43] | 9.0 [.35] | 5.2 [.20] | 1.6 [.06] | 13 [.51] | 11.5 [.45] | 10 [.39] | 0.8 [.03] | 0.35 [.01] | 7.5 [.30] | 0.8 [.03] | 0.6 [.02] |

As Supplied (a)

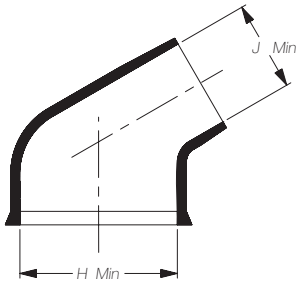


After Recovery (b)

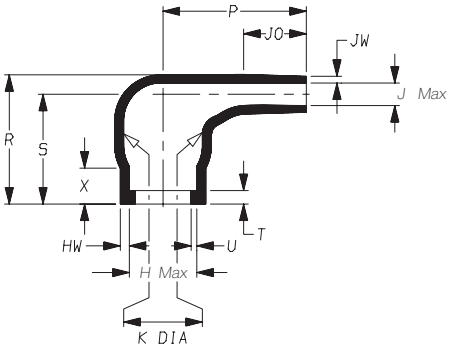


**Dimensions** in millimeters (in inches, for reference)

| | As Supplied | | After Recovery | | | | | | | | | | | | | |
|---|---|---|---|---|---|---|---|---|---|---|---|---|---|---|---|---|
| Part Number | H Min. a | J Min. a | H Max. b | J Max. b | K Min. b | K Max. b | P ±10% b | R ±10% b | S ±10% b | T ±10% b | U ±10% b | JO ±10% b | HW ±20% b | JW ±20% b | X ±20% b |
| 223W601 | 10 [.39] | 6.0 [.24] | 6.3 [.25] | 2.0 [.08] | 10 [.39] | 7.4 [.29] | 12.5 [.49] | 11.5 [.45] | 9.8 [.39] | 1.2 [.05] | 0.5 [.02] | 6.0 [.24] | 1.0 [.04] | 0.6 [.02] | 3.2 [.13] |

As Supplied (a)

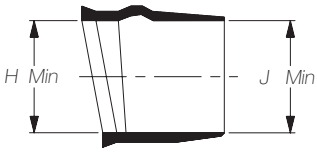


After Recovery (b)

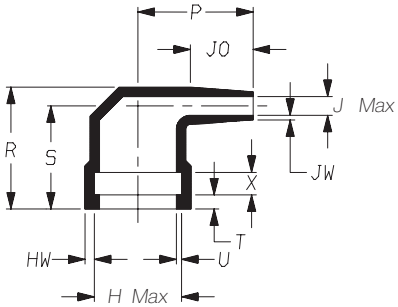


**Dimensions** in millimeters (in inches, for reference)

| | As Supplied | | After Recovery | | | | | | | | | | |
|---|---|---|---|---|---|---|---|---|---|---|---|---|---|
| Part Number | H Min. a | J Min. a | H Max. b | J Max. b | P ±10% b | R ±10% b | S ±10% b | T ±10% b | U ±10% b | X ±10% b | JO ±10% b | HW ±20% b | JW ±20% b |
| 224W221 | 11 [.43] | 11 [.43] | 9.3 [.37] | 2.1 [.08] | 12.3 [.48] | 13 [.51] | 11 [.43] | 1.5 [.06] | 0.55 [.02] | 2.4 [.09] | 6.6 [.26] | 1.0 [.04] | 0.5 [.02] |





Catalog 1654025
Revised 3-13

www.te.com

Dimensions are shown for reference purposes only. Specifications subject to change.

Dimensions are in millimeters unless otherwise specified.

USA: +1 800 522 6752
Asia Pacific: +86 0 400 820 6015
UK: +44 800 267 666

For additional support numbers please visit www.te.com

## 207W213 to 256

### Two-Part Feedthrough

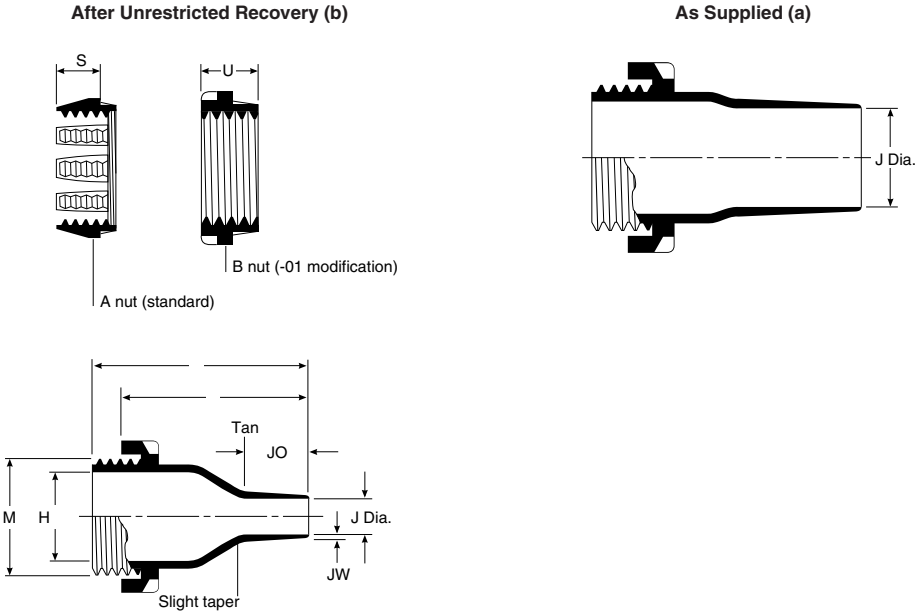


### Applications

Use for strain relief and abrasion protection when cables pass through equipment boxes or panels.

### Materials Available

| Material Dash Number | Material Description | Precoating No. | Adhesive Part No. |
|---|---|---|---|
| -3 | Semirigid polyolefin | /42 or /86 | S-1017 or S-1048 |
| -4 | Flexible polyolefin | /42 or /86 | S-1017 or S-1048 |
| -12 | Fluoroelastomer | N/A | S-1255-04 |
| -25 | Fluid-resistant elastomer | /42 or /86 or /225 | S-1017 or S-1048 or S-1125 |
| -100 | Polyolefin, Zerohal | /86 or /180 | S-1048 or S-1030 |

*For more information, please see the appropriate material page in this section.

**For more information, please see section 5.

### Product Dimensions

| Part No. | H Ref. b | J Min. -3, -4, -12, -25 a | J Min. -100 a | J Max. b | JO Max. b | M Thread b | P ±10% b | R ±10% b | S ±10% b | U ±10% b | JW ±20% b | Hole Dia. ±.51 (.02] |
|---|---|---|---|---|---|---|---|---|---|---|---|---|
| 207W213 | 11.9 [.47] | 9.9 [.39] | 8.5 [.33] | 4.1 [.16] | 15.2 [.60] | 20.1 [.79] | 62.0 [2.44] | 49.0 [1.93] | 13.0 [.51] | 9.9 [.39] | 1.3 [.05] | 23.9 [.94] |
| 207W223 | 20.1 [.79] | 18.0 [.71] | 16.5 [.65] | 7.1 [.28] | 19.3 [.76] | 30.0 [1.18] | 71.9 [2.83] | 58.9 [2.32] | 16.0 [.63] | 9.9 [.39] | 1.8 [.07] | 34.0 [1.34] |
| 207W234 | 30.1 [1.22] | 27.9 [1.10] | 26.5 [1.04] | 11.9 [.47] | 26.9 [1.06] | 41.9 [1.65] | 87.1 [3.43] | 73.9 [2.91] | 18.0 [.71] | 9.9 [.39] | 2.03 [.08] | 47.0 [1.85] |
| 207W245 | 45.0 [1.77] | 41.9 [1.65] | 40.5 [1.59] | 18.0 [.71] | 32.0 [1.26] | 55.9 [2.20] | 102.1 [4.02] | 88.9 [3.50] | 18.0 [.71] | 9.9 [.39] | 3.05 [.12] | 60.5 [2.38] |
| 207W256 | 68.1 [2.68] | 64.0 [2.52] | 64.5 [2.54] | 30.0 [1.18] | 39.1 [1.54] | 80.0 [3.15] | 121.9 [4.80] | 109.0 [4.29] | 18.0 [.71] | 9.9 [.39] | 3.05 [.12] | 85.1 [3.35] |

Note: Coating is optional. As supplied dimensions appearing in table are for uncoated parts. When coating is added, entry diameters will be reduced by 1.5 [.06] max.



Dimensions are shown for reference purposes only. Specifications subject to change.

Dimensions are in millimeters unless otherwise specified.

USA: +1 800 522 6752
Asia Pacific: +86 0 400 820 6015
UK: +44 800 267 666

For additional support numbers please visit www.te.com

## CES

### Heat-Shrinkable Cable Entry Seals

### Product Facts

- Comes in many sizes and configurations
- Seals multicable openings
- SAE-AS81765/1 Type 1

### Applications

Tyco Electronics Heat-Shrinkable Cable-Entry Seals (CESs) provide a watertight, fume-tight seal where cables enter connection boxes, bulkheads, or other enclosures.

CESs are available in two basic types: standard and threaded. The standard CES for thin-wall enclosures consists of a three-part assembly — a rigid plastic nylon nut, an O-ring, and a heat-shrinkable molded area. The CES for threaded-hole applications is a one-part assembly that combines a tapered national pipe thread (NPT) in rigid plastic nylon with a heat-shrinkable molded area.

All CESs are available with the molded area configured with one opening for a single wire or cable entry or with two, three, or four legs of equal size to seal multiple wires or cables at the entry to enclosures and/or bulkheads. To meet sealing requirements, all CESs have factory-applied adhesive that provides the seal to wire and cable jackets. When armored cable is being sealed it may be necessary to use additional sealants, such as G.E. RTV 112 or Dow Corning RTV 732, to form the water seal.

### Standard Cable Entry Seal Installation Instructions

| Cable entry seal number | Torque in-pounds | Torque Nm |
|---|---|---|
| 1 | 15-20 | 1.7-2.3 |
| 2 | 15-20 | 1.7-2.3 |
| 3 | 20-25 | 2.3-2.8 |
| 4 | 40-45 | 4.5-5.1 |
| 5 | 45-50 | 5.1-5.7 |

**Step 1**
Place rigid, externally threaded nut through hole so flanged end is on the inside of the can or cabinet.

**Step 2**
Place O-ring over threaded end and position against outside of can or cabinet.

**Step 3**
Screw shrinkable, internally threaded component onto the rigid nut and tighten, using appropriate spanner wrenches, until O-ring is slightly flattened — or use the torque values shown in the table to the left.

**Step 4**
Insert cable through expanded opening and make necessary connections (see note following Step 4 in the next section).

**Step 5**
Shrink expanded nose by applying 121°C-135°C [250°F-275°F] of heat from a heat gun with circular reflector, or a gas torch, or other heat source.* When part has shrunk to the cable, and when the sealant is seen to flow, discontinue heat. Additional heating *will not* make the component shrink tighter.

*Follow the safety precautions of the manufacturer of the heater.

### Threaded Cable Entry Seal Installation Instructions

Note: Surfaces to be sealed should be clean and free of burrs, pits, or deep scratches.

**Step 1**
Apply a thread sealant to the threaded end and then screw threaded cable entry seal into pre-tapped hole or pipe fitting.

**Step 2**
Tighten by applying wrench to hexagonal nut.

**Step 3**
Insert cable through expanded opening and make necessary connection (see Note).

**Step 4**
Shrink expanded nose by applying 121°C-135°C [250°F-275°F] of heat from a heat gun with circular reflector, gas torch, or other heat source.* When part has shrunk to the cable, and when the sealant is seen to flow, discontinue heat. Additional heating *will not* make the component shrink tighter.

**Note**
If armored cable is used, the factory-applied sealant will not fill the interstices of the armor. The armor must be cut back so that the part is allowed to shrink and seal to the cable sheath as well as come down over the armor. To keep the armor from unraveling, some armor must be approximately 1/4 inch to 3/8 inch [.01 to .02 mm] inside the cable entry seal leg.

*Follow the safety precautions of the manufacturer of the heater.



Catalog 1654025
Revised 3-13

www.te.com

Dimensions are shown for reference purposes only. Specifications subject to change.

Dimensions are in millimeters unless otherwise specified.

USA: +1 800 522 6752
Asia Pacific: +86 0 400 820 6015
UK: +44 800 267 666

For additional support numbers please visit www.te.com

## CES (Continued)

### Standard CES
**Dimensions are mm [inches]**

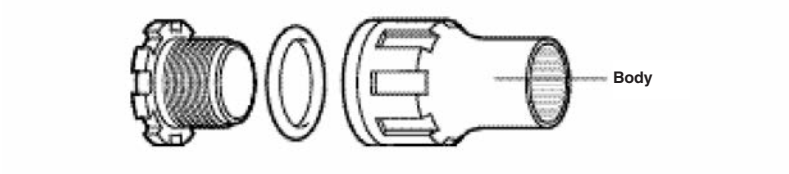


### Product Dimensions

| Part No. | No. of Legs | Overall Nom. Recommended Length | Min. Expanded I.D. Body | Max. Recovered I.D. Body | Max. I.D. of Part | Drill Size | Max. O.D. of Nut |
|---|---|---|---|---|---|---|---|
| CES-1 | 1 | 69.85 [2.75] | 12.70 [0.50] | 4.32 [0.17] | 19.05 [0.75] | 25.40 [1.00] | 35.81 [1.410] |
| CES-2 | 1 | 69.85 [2.75] | 19.05 [0.75] | 6.35 [0.25] | 19.05 [0.75] | 25.40 [1.00] | 35.81 [1.410] |
| CES-3 | 1 | 95.25 [3.75] | 28.45 [1.12] | 12.70 [0.50] | 27.94 [1.10] | 35.05 [1.38] | 48.31 [1.902] |
| CES-4 | 1 | 114.30 [4.50] | 40.64 [1.60] | 19.05 [0.75] | 39.62 [1.56] | 50.80 [2.00] | 69.09 [2.720] |
| CES-4S* | 1 | 114.30 [4.50] | 50.80 [2.00] | 19.05 [0.75] | 53.34 [2.10] | 59.94 [2.36] | 85.09 [3.350] |
| CES-5 | 1 | 177.80 [7.00] | 69.85 [2.75] | 36.32 [1.43] | 73.66 [2.90] | 88.90 [3.50] | 103.38 [4.070] |

*Part configuration may be different than depicted in figure. Contact TE for specification.
Also available in threaded version.

### Breakout CES
**Dimensions are mm [inches]**

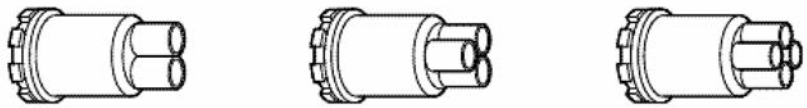

### Product Dimensions

| Part No. | No. of Legs | Overall Nom. Recommended Length | Min. Expanded I.D. (Each Leg) | Max. Recovered I.D. (Each Leg) | Max. I.D. of Part | Drill Size | Max. O.D. of Nut |
|---|---|---|---|---|---|---|---|
| CES-2-D1A | 2 | 69.85 [2.75] | 15.24 [0.60] | 2.79 [0.11] | 19.05 [0.75] | 25.40 [1.00] | 35.81 [1.41] |
| CES-2-T1 | 3 | 69.85 [2.75] | 10.16 [0.40] | 2.79 [0.11] | 19.05 [0.75] | 25.40 [1.00] | 35.81 [1.41] |
| CES-2-T1B | 3 | 88.90 [3.50] | 15.24 [0.60] | 4.32 [0.17] | 19.05 [0.75] | 25.40 [1.00] | 35.81 [1.41] |
| CES-2-F1A | 4 | 69.85 [2.75] | 10.16 [0.40] | 2.79 [0.11] | 19.05 [0.75] | 25.40 [1.00] | 35.81 [1.41] |
| CES-2-F1 | 4 | 88.90 [3.50] | 15.24 [0.60] | 4.32 [0.17] | 19.05 [0.75] | 25.40 [1.00] | 35.81 [1.41] |
| CES-3-D1 | 2 | 88.90 [3.50] | 15.24 [0.60] | 4.32 [0.17] | 27.94 [1.10] | 35.05 [1.38] | 48.26 [1.90] |
| CES-3-T1 | 3 | 88.90 [3.50] | 15.24 [0.60] | 4.32 [0.17] | 27.94 [1.10] | 35.05 [1.38] | 48.26 [1.90] |
| CES-3-F1 | 4 | 88.90 [3.50] | 15.24 [0.60] | 4.32 [0.17] | 27.94 [1.10] | 35.05 [1.38] | 48.26 [1.90] |
| CES-4-D3 | 2 | 101.60 [4.00] | 22.86 [0.90] | 7.62 [0.30] | 40.64 [1.60] | 50.80 [2.00] | 69.09 [2.72] |
| CES-4-T1 | 3 | 101.60 [4.00] | 22.86 [0.90] | 7.62 [0.30] | 40.64 [1.60] | 50.80 [2.00] | 69.09 [2.72] |
| CES-4-F1 | 4 | 101.60 [4.00] | 22.86 [0.90] | 7.62 [0.30] | 40.64 [1.60] | 50.80 [2.00] | 69.09 [2.72] |
| CES-5-T4 | 3 | 127.00 [5.00] | 31.75 [1.25] | 12.70 [0.50] | 73.66 [2.90] | 63.50 [2.50] | 103.38 [4.07] |
| CES-5-F4 | 4 | 127.00 [5.00] | 31.75 [1.25] | 12.70 [0.50] | 73.66 [2.90] | 63.50 [2.50] | 103.38 [4.07] |

### Right-Angle Breakout CES
**Dimensions are mm [inches]**

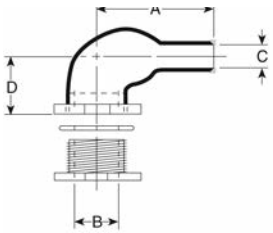


| Part No. | C | | B | Length | | Drill Size |
|---|---|---|---|---|---|---|
| | Min. Exp. ID | Max. Rec. ID | ID Min | D | A | |
| CES-1R | 12.70 [0.50] | 7.11 [0.28] | 12.70 [0.50] | 35.56 [1.4] | 42.67 [1.68] | 25.40 [1.00] |
| CES-2R | 18.03 [0.71] | 8.38 [0.33] | 19.05 [0.75] | 43.18 [1.7] | 44.96 [1.77] | 25.40 [1.00] |
| CES-3R | 27.94 [1.10] | 9.65 [0.38] | 27.94 [1.10] | 53.34 [2.1] | 58.42 [2.30] | 34.80 [1.37] |
| CES-4R | 40.64 [1.60] | 15.75 [0.62] | 40.64 [1.60] | 78.74 [3.1] | 71.12 [2.80] | 50.80 [2.00] |



Dimensions are shown for reference purposes only. Specifications subject to change.

Dimensions are in millimeters unless otherwise specified.

USA: +1 800 522 6752
Asia Pacific: +86 0 400 820 6015
UK: +44 800 267 666

For additional support numbers please visit www.te.com

## CES (Continued)

### Threaded CES

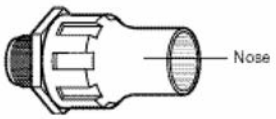


| Part No. | Overall Nom. Recommended Length | Min. Expanded I.D. Nose | Max. Recovered I.D. Nose | National Adapter I.D. | Pipe Thread Size |
|---|---|---|---|---|---|
| CES-2-A50 | 83.82 [3.30] | 19.05 [0.75] | 6.35 [0.25] | 12.70 [0.50] | 1/2–14 |
| CES-2-A75 | 83.82 [3.30] | 19.05 [0.75] | 6.35 [0.25] | 19.05 [0.75] | 3/4–14 |
| CES-2-A100 | 83.82 [3.30] | 19.05 [0.75] | 6.35 [0.25] | 19.05 [0.75] | 1–11 1/2 |
| CES-3-A100 | 111.00 [4.37] | 28.45 [1.12] | 12.70 [0.50] | 25.40 [1.00] | 1–11 1/2 |
| CES-3-A150 | 117.35 [4.62] | 28.45 [1.12] | 12.70 [0.50] | 27.94 [1.10] | 1 1/2–11 1/2 |
| CES-4-A150* | 127.00 [5.00] | 50.80 [2.00] | 19.05 [0.75] | 35.56 [1.40] | 1 1/2–11 1/2 |
| CES-5-A250* | 152.40 [6.00] | 69.85 [2.75] | 25.40 [1.00] | 60.96 [2.40] | 2 1/2–10 |

* Not illustrated - refer to Specification Control Drawing for details.



### Threaded Breakout CES

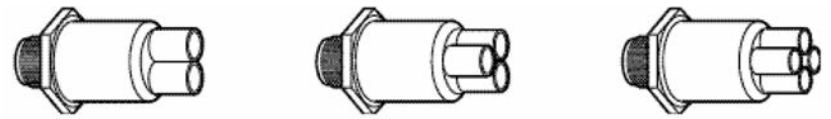

### Product Dimensions

| Part No. | No. of Legs | Overall Nom. Recommended Length | Min. Expanded I.D. (Each Leg) | Max. Recovered I.D. (Each Leg) | Max. I.D. of Part | Pipe Thread Size (NPT) |
|---|---|---|---|---|---|---|
| CES-2A-T1 | 3 | 95.25 [3.75] | 10.16 [0.4] | 2.79 [0.11] | 12.70 [0.50] | 1/2–14 |
| CES-2A-F1 | 4 | 95.25 [3.75] | 10.16 [0.4] | 2.79 [0.11] | 12.70 [0.50] | 1/2–14 |
| CES-2A-D1 | 2 | 95.25 [3.75] | 15.24 [0.6] | 2.79 [0.11] | 19.05 [0.75] | 3/4–14 |
| CES-2A-T2 | 3 | 95.25 [3.75] | 10.16 [0.4] | 2.79 [0.11] | 19.05 [0.75] | 3/4–14 |
| CES-2A-F2 | 4 | 95.25 [3.75] | 10.16 [0.4] | 2.79 [0.11] | 19.05 [0.75] | 3/4–14 |
| CES-3A-D1 | 2 | 95.25 [3.75] | 15.24 [0.6] | 4.32 [0.17] | 25.40 [1.00] | 1–11 1/2 |
| CES-2A-T3 | 3 | 95.25 [3.75] | 15.24 [0.6] | 4.32 [0.17] | 25.40 [1.00] | 1–11 1/2 |
| CES-3A-F1 | 4 | 95.25 [3.75] | 15.24 [0.6] | 4.32 [0.17] | 25.40 [1.00] | 1–11 1/2 |
| CES-3A-D2 | 2 | 95.25 [3.75] | 15.24 [0.6] | 4.32 [0.17] | 27.94 [1.10] | 1 1/2–11 1/2 |
| CES-3A-T2 | 3 | 95.25 [3.75] | 15.24 [0.6] | 4.32 [0.17] | 27.94 [1.10] | 1 1/2–11 1/2 |
| CES-3A-F2 | 4 | 95.25 [3.75] | 15.24 [0.6] | 4.32 [0.17] | 27.94 [1.10] | 1 1/2–11 1/2 |
| CES-4A-D3 | 2 | 95.25 [3.75] | 22.86 [0.9] | 7.62 [0.30] | 37.34 [1.47] | 1 1/2–11 1/2 |
| CES-4A-T3 | 3 | 95.25 [3.75] | 22.86 [0.9] | 7.62 [0.30] | 37.34 [1.47] | 1 1/2–11 1/2 |
| CES-4A-F3 | 4 | 95.25 [3.75] | 22.86 [0.9] | 7.62 [0.30] | 37.34 [1.47] | 1 1/2–11 1/2 |

Note: Coating is optional. As supplied dimensions appearing in table are for uncoated parts. When coating is added, entry diameters will be reduced by 1.5 [.06] max.



Dimensions are shown for reference purposes only. Specifications subject to change.

Dimensions are in millimeters unless otherwise specified.

USA: +1 800 522 6752
Asia Pacific: +86 0 400 820 6015
UK: +44 800 267 666

For additional support numbers please visit www.te.com

## CES (Continued)

### Right-Angle Threaded CES

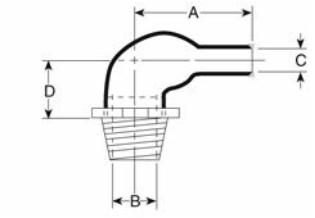


| Part No. | C | | B | Length | | NPT Size |
|---|---|---|---|---|---|---|
| | Min. Exp. ID | Max. Rec. ID | ID Min | A | D | |
| CES-2R-A50 | 12.70 [0.50] | 7.11 [0.28] | 12.70 [0.50] | 35.56 [1.4] | 25.40 [1.00] | 1/2-14 |
| CES-2R-A75 | 18.03 [0.71] | 8.38 [0.33] | 19.05 [0.75] | 43.18 [1.7] | 27.94 [1.10] | 3/4-14 |
| CES-3R-A100 | 27.94 [1.10] | 9.65 [0.38] | 25.40 [1.00] | 53.34 [2.1] | 33.78 [1.33] | 1-11 1/2 |
| CES-3R-A150 | 40.64 [1.60] | 15.75 [0.62] | 27.94 [1.10] | 78.74 [3.1] | 39.62 [1.56] | 1 1/2-11 1/2 |



Dimensions are shown for reference purposes only. Specifications subject to change.

Dimensions are in millimeters unless otherwise specified.

USA: +1 800 522 6752
Asia Pacific: +86 0 400 820 6015
UK: +44 800 267 666

For additional support numbers please visit www.te.com

## 301A011 to 048

### T Transition

**As Supplied (a)**

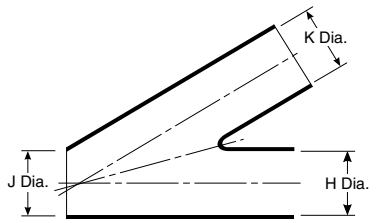


**After Unrestricted Recovery (b)**

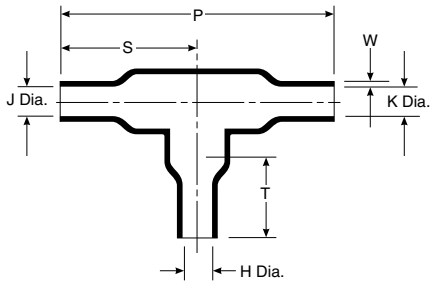


### Applications

Provides strain relief and mechanical protection on cable harness assemblies.

### Materials Available

| Material Dash Number | Material Description | Precoating No. | Adhesive Part No. |
|---|---|---|---|
| -3 | Semirigid polyolefin | /42 or /86 | S-1017 or S-1048 |
| -4 | Flexible polyolefin | /42 or /86 | S-1017 or S-1048 |
| -12 | Fluoroelastomer | N/A | S-1255-04 |
| -25 | Fluid-resistant elastomer | /42 or /86 or /225 | S-1017 or S-1048 or S-1125 |
| -100 | Polyolefin, Zerohal | /86, /180 | S-1048 or S-1030 |

*For more information, please see the appropriate material page in this section.
**For more information, please see section 5.

### Product Dimensions

| Part No. | H, J & K Min. a | H, J & K Max. b | P ±10% b | S ±10% b | T ±10% b | W ±30% b |
|---|---|---|---|---|---|---|
| 301A011 | 6.6 [.26] | 3.6 [.14] | 29.7 [1.17] | 15.1 [.59] | — | 1.02 [.04] |
| 301A022 | 13.2 [.52] | 6.9 [.27] | 58.7 [2.31] | 29.5 [1.16] | 17.5 [.69] | 1.52 [.06] |
| 301A028 | 20.0 [0.79] | 10.2 [.40] | 90 [3.54] | 45 [1.77] | 30 [1.18] | 2.0 [.08] |
| 301A034 | 26.9 [1.06] | 13.5 [.53] | 120.1 [4.73] | 60.2 [2.37] | 35.6 [1.40] | 2.29 [.09] |
| 301A048 | 55.6 [2.19] | 30.2 [1.19] | 246.4 [9.70] | 123.2 [4.85] | 70.9 [2.79] | 3.05 [.12] |

Note: Coating is optional. As supplied dimensions appearing in table are for uncoated parts. When coating is added, entry diameters will be reduced by 1.5 [.06] max.





Catalog 1654025
Revised 3-13

www.te.com

Dimensions are shown for reference purposes only. Specifications subject to change.

Dimensions are in millimeters unless otherwise specified.

USA: +1 800 522 6752
Asia Pacific: +86 0 400 820 6015
UK: +44 800 267 666

For additional support numbers please visit www.te.com

## 301A511 to 514

### Slimline T Transition

**As Supplied (a)**

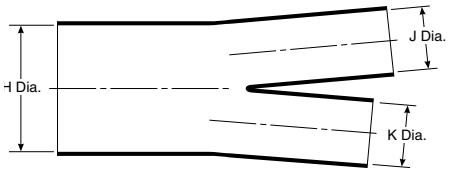


**After Unrestricted Recovery (b)**

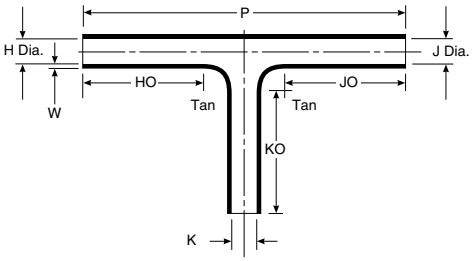


### Applications

Provides strain relief and mechanical protection on cable harness assemblies.

### Materials Available

| Material Dash Number | Material Description | Precoating No. | Adhesive Part No. |
|---|---|---|---|
| -50 | Fluoroelastomer polymer blend | N/A | S-1125 |
| -51 | Elastomer polymer blend | /164 | S-1124 |
| -71 | Flexible polyolefin | /42 or /86 | S-1017 or S-1048 |
| -125 | Fluoropolymer | N/A | S-1255-04 |

*For more information, please see the appropriate material page in this section.
**For more information, please see section 5.

### Product Dimensions

| Part No. | H | | J & K | | HO, JO, & KO ±10% b | W Nom. b | P Nom. b |
|---|---|---|---|---|---|---|---|
| | Min. a | Max. b | Min. a | Max. b | | | |
| 301A511 | 19.8 [.78] | 6.6 [.26] | 13.2 [.52] | 6.6 [.26] | 25.4 [1.00] | 1.02 [.04] | 80.8 [3.18] |
| 301A512 | 34.3 [1.35] | 11.4 [.45] | 22.9 [.90] | 11.4 [.45] | 41.1 [1.62] | 1.27 [.05] | 120.4 [4.74] |
| 301A513 | 60.2 [2.37] | 20.1 [.79] | 40.1 [1.58] | 20.1 [.79] | 63.5 [2.50] | 1.52 [.06] | 175.8 [6.92] |
| 301A514* | 83.3 [3.28] | 33.3 [1.31] | 54.9 [2.16] | 33.3 [1.31] | 88.9 [3.50] | 1.78 [.07] | 242.3 [9.54] |

Note: Coating is optional. As supplied dimensions appearing in table are for uncoated parts. When coating is added, entry diameters will be reduced by 1.5 [.06] max.
*301A514 is not available in -125 Fluoropolymer material.



Dimensions are shown for reference purposes only. Specifications subject to change.

Dimensions are in millimeters unless otherwise specified.

USA: +1 800 522 6752
Asia Pacific: +86 0 400 820 6015
UK: +44 800 267 666

For additional support numbers please visit www.te.com

## 322A112 to 158

### T Transition

**As Supplied (a)**

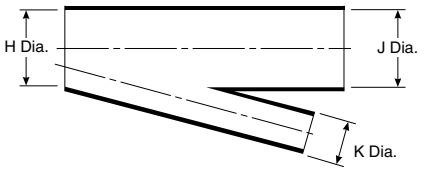


**After Unrestricted Recovery (b)**

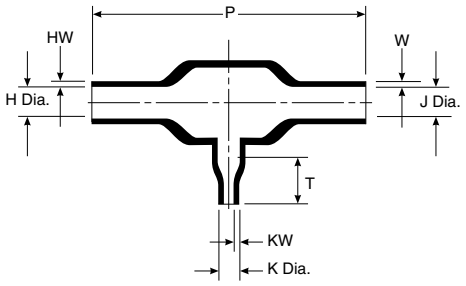


### Applications

Provides strain relief and mechanical protection on cable harness assemblies.

### Materials Available

| Material Dash Number | Material Description | Precoating No. | Adhesive Part No. |
|---|---|---|---|
| -3 | Semirigid polyolefin | /42 or /86 | S-1017 or S-1048 |
| -4 | Flexible polyolefin | /42 or /86 | S-1017 or S-1048 |
| -12 | Fluoroelastomer | N/A | S-1255-04 |
| -25 | Modified elastomer | /42 or /86 or /225 | S-1017 or S-1048 or S-1125 |
| -100 | Polyolefin, Zerohal | /86 or /180 | S-1048 or S-1030 |

*For more information, please see the appropriate material page in this section.
**For more information, please see section 5.

### Product Dimensions

| Part No. | H & J | | K | | P | T | HW & W | KW |
|---|---|---|---|---|---|---|---|---|
| | Min. a | Max. b | Min. a | Max. b | ±10% b | ±10% b | ±20% b | ±20% b |
| 322A112 | 13.2 [.52] | 5.8 [.23] | 6.6 [.26] | 3.0 [.12] | 52.3 [2.06] | — | 1.52 [.06] | 1.02 [.04] |
| 322A123 | 26.9 [1.06] | 12.4 [.49] | 6.6 [.26] | 3.0 [.12] | 83.3 [3.28] | 10.7 [.42] | 2.54 [.10] | 1.02 [.04] |
| 322A134 | 26.9 [1.06] | 12.7 [.50] | 13.2 [.52] | 5.8 [.23] | 107.7 [4.24] | 20.3 [.80] | 2.54 [.10] | 1.52 [.06] |
| 322A148 | 55.6 [2.19] | 25.4 [1.00] | 13.2 [.52] | 5.8 [.23] | 180.6 [7.11] | 25.4 [1.00] | 4.57 [.18] | 1.52 [.06] |
| 322A158 | 55.6 [2.19] | 25.4 [1.00] | 26.9 [1.06] | 12.4 [.49] | 222.3 [8.75] | 38.1 [1.50] | 4.57 [.18] | 2.54 [.10] |

Note: Coating is optional. As supplied dimensions appearing in table are for uncoated parts. When coating is added, entry diameters will be reduced by 1.5 [.06] max.





Catalog 1654025
Revised 3-13

www.te.com

Dimensions are shown for reference purposes only. Specifications subject to change.

Dimensions are in millimeters unless otherwise specified.

USA: +1 800 522 6752
Asia Pacific: +86 0 400 820 6015
UK: +44 800 267 666

For additional support numbers please visit www.te.com

## 342A012 to 058

### 45° Side-Breakout Transition

**As Supplied (a)**

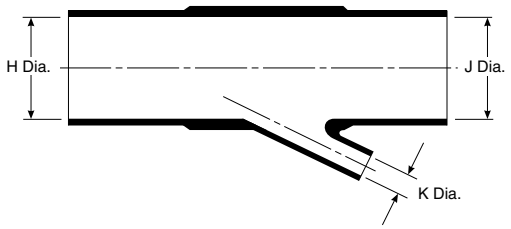


**After Unrestricted Recovery (b)**

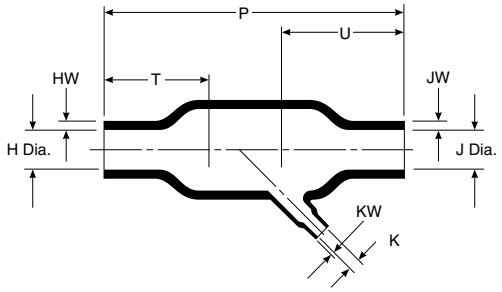


### Applications

Provides strain relief and mechanical protection on cable harness assemblies.

### Materials Available

| Material* | Material Description | Precoating No. | Adhesive Part No.** |
|---|---|---|---|
| -3 | Semirigid polyolefin | /42 or /86 | S-1017 or S-1048 |
| -4 | Flexible polyolefin | /42 or /86 | S-1017 or S-1048 |
| -12 | Fluoroelastomer | N/A | S-1255-04 |
| -25 | Fluid-resistant elastomer | /42 or /86 or /225 | S-1017 or S-1048 or S-1125 |
| -100 | Polyolefin, Zerohal | /86 or /180 | S-1048 or S-1030 |

*For more information, please see the appropriate material page in this section.
**For more information, please see section 5.

### Product Dimensions

| Part No. | H & J | | K | | P ±10% b | T* ±10% b | U* ±10% b | HW & JW ±20% b | KW ±20% b |
|---|---|---|---|---|---|---|---|---|---|
| | Min. a | Max. b | Min. a | Max. b | | | | | |
| 342A012 | 13.2 [.52] | 6.9 [.27] | 6.6 [.26] | 3.6 [.14] | 49.3 [1.94] | 19.6 [.77] | 19.6 [.77] | 1.52 [.06] | 1.02 [.04] |
| 342A024 | 26.9 [1.06] | 12.7 [.50] | 6.6 [.26] | 3.6 [.14] | 92.5 [3.64] | 31.8 [1.25] | 39.6 [1.56] | 2.54 [.10] | 1.02 [.04] |
| 342A034 | 26.9 [1.06] | 13.7 [.54] | 13.2 [.52] | 6.1 [.24] | 144.8 [5.70] | 50.8 [2.00] | 50.8 [2.00] | 2.54 [.10] | 1.52 [.06] |
| 342A048 | 55.6 [2.19] | 26.9 [1.06] | 13.2 [.52] | 6.9 [.27] | 184.9 [7.28] | 63.5 [2.50] | 63.5 [2.50] | 4.57 [.18] | 1.52 [.06] |
| 342A058 | 55.6 [2.19] | 26.9 [1.06] | 26.9 [1.06] | 13.7 [.54] | 203.5 [8.01] | 66.0 [2.60] | 66.0 [2.60] | 4.57 [.18] | 2.54 [.10] |

Note: Coating is optional. As supplied dimensions appearing in table are for uncoated parts. When coating is added, entry diameters will be reduced by 1.5 [.06] max.
* T = vent port location, U = injection port location



Dimensions are shown for reference purposes only. Specifications subject to change.

Dimensions are in millimeters unless otherwise specified.

USA: +1 800 522 6752
Asia Pacific: +86 0 400 820 6015
UK: +44 800 267 666

For additional support numbers please visit www.te.com

## 362A014 to 114

### 30° Side-Breakout Transition

**As Supplied (a)**

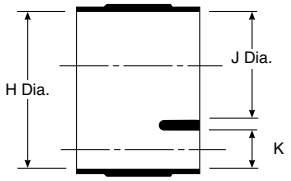


**After Unrestricted Recovery (b)**

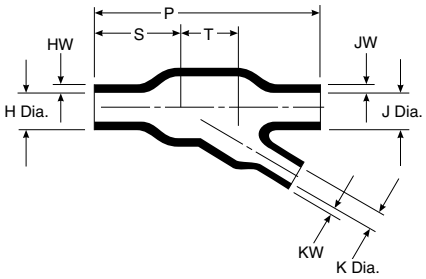


### Applications

Provides strain relief and mechanical protection on cable harness assemblies.

### Materials Available

| Material* | Material Description | Precoating No. | Adhesive Part No.** |
|---|---|---|---|
| -3 | Semirigid polyolefin | /42 or /86 | S-1017 or S-1048 |
| -4 | Flexible polyolefin | /42 or /86 | S-1017 or S-1048 |
| -12 | Fluoroelastomer | N/A | S-1255-04 |
| -25 | Fluid-resistant elastomer | /42 or /86 or /225 | S-1017 or S-1048 or S-1125 |
| -100 | Polyolefin, Zerohal | /86 or /180 | S-1048 or S-1030 |

*For more information, please see the appropriate material page in this section.
**For more information, please see section 5.

### Product Dimensions

| Part No. | H & J | | K | | P | S | T | HW & JW | KW |
|---|---|---|---|---|---|---|---|---|---|
| | Min. a | Max. b | Min. a | Max. b | ±10% b | ±10% b | ±10% b | ±20% b | ±20% b |
| 362A014 | 30.5 [1.20] | 15.7 [.62] | 20.3 [.80] | 10.7 [.42] | 82.6 [3.25] | 31.8 [1.25] | 21.1 [.63] | 2.54 [.10] | 1.78 [.07] |
| 362A024 | 35.6 [1.40] | 18.3 [.72] | 15.2 [.60] | 8.6 [.34] | 63.5 [2.50] | 19.1 [.75] | 22.4 [.88] | 2.54 [.10] | 1.52 [.06] |
| 362A114 | 35.6 [1.40] | 18.8 [.74] | 10.2 [.40] | 5.3 [.21] | 61.0 [2.40] | 19.1 [.75] | 21.3 [.84] | 2.79 [.11] | 1.52 [.06] |

Note: Coating is optional. As supplied dimensions appearing in table are for uncoated parts. When coating is added, entry diameters will be reduced by 1.5 [.06] max.
S = vent port, S + T = injection port





Catalog 1654025
Revised 3-13

www.te.com

Dimensions are shown for reference purposes only. Specifications subject to change.

Dimensions are in millimeters unless otherwise specified.

USA: +1 800 522 6752
Asia Pacific: +86 0 400 820 6015
UK: +44 800 267 666

For additional support numbers please visit www.te.com

## 381A301 to 304

### Slimline Y Transition

**As Supplied (a)**

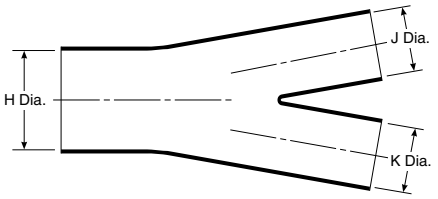


**After Unrestricted Recovery (b)**

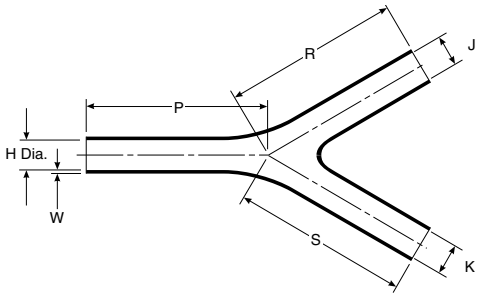


### Applications

Provides strain relief and mechanical protection on cable harness assemblies.

### Materials Available

| Material* | Material Description | Precoating No. | Adhesive Part No.** |
|---|---|---|---|
| -50 | Fluoroelastomer polymer blend | N/A | S-1125 |
| -51 | Elastomer polymer blend | /164 | S-1124 |
| -71 | Flexible polyolefin | /42 or /86 | S-1017 or S-1048 |
| -125 | Fluoropolymer | — | S-1255-04 |

*For more information, please see the appropriate material page in this section.
**For more information, please see section 5.

### Product Dimensions

| Part No. | H | | J & K | | W | P | R & S |
|---|---|---|---|---|---|---|---|
| | Min. a | Max. b | Min. a | Max. b | Nom. b | Nom. b | Nom. b |
| 381A301 | 19.8 [.78] | 6.6 [.26] | 13.2 [.52] | 6.6 [.26] | 1.0 [.04] | 40.6 [1.60] | 40.6 [1.60] |
| 381A302 | 34.3 [1.35] | 11.4 [.45] | 22.9 [.90] | 11.4 [.45] | 1.3 [.05] | 63.0 [2.48] | 63.0 [2.48] |
| 381A303 | 60.2 [2.37] | 20.1 [.79] | 40.1 [1.58] | 20.1[.79] | 1.5 [.06] | 94.7 [3.73] | 94.7 [3.73] |
| 381A304* | 83.3 [3.28] | 33.3 [1.31] | 54.9 [2.16] | 33.3 [1.31] | 1.8 [.07] | 133.9 [5.27] | 133.9 [5.27] |

Note: Coating is optional. As supplied dimensions appearing in table are for uncoated parts. When coating is added, entry diameters will be reduced by 1.5 [.06] max.
*381A304 is not available in -125 Fluoropolymer material.



Dimensions are shown for reference purposes only. Specifications subject to change.

Dimensions are in millimeters unless otherwise specified.

USA: +1 800 522 6752
Asia Pacific: +86 0 400 820 6015
UK: +44 800 267 666

For additional support numbers please visit www.te.com

## 382A012 to 046

### Y Transition

**As Supplied (a)**

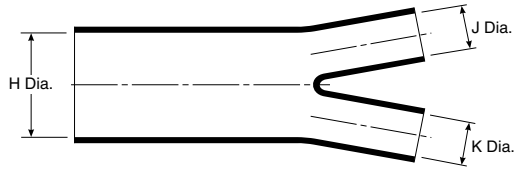


**After Unrestricted Recovery (b)**

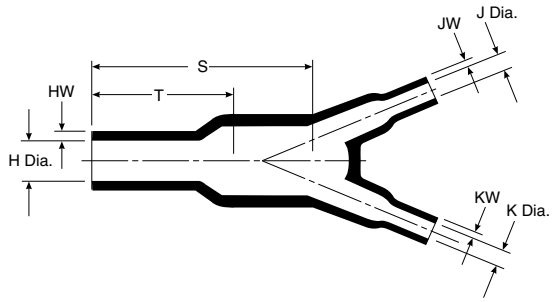


### Applications

Provides strain relief and mechanical protection on cable harness assemblies.

### Materials Available

| Material* | Material Description | Precoating No. | Adhesive Part No.** |
|---|---|---|---|
| -3 | Semirigid polyolefin | /42 or /86 | S-1017 or S-1048 |
| -4 | Flexible polyolefin | /42 or /86 | S-1017 or S-1048 |
| -12 | Fluoroelastomer | N/A | S-1255-04 |
| -25 | Fluid-resistant elastomer | /42 or /86 or /225 | S-1017 or S-1048 or S-1125 |
| -100 | Polyolefin, Zerohal | /86 or /180 | S-1048 or S-1030 |

*For more information, please see the appropriate material page in this section.
**For more information, please see section 5.

### Product Dimensions

| Part No. | H Min. a | H Max. b | J & K Min. a | J & K Max. b | S ±10% b | T ±10% b | HW ±20% b | JW & KW ±20% b |
|---|---|---|---|---|---|---|---|---|
| 382A012 | 13.2 [.52] | 6.1 [.24] | 6.6 [.26] | 3.3 [.13] | 23.9 [.94] | 15.5 [.61] | 1.52 [.06] | 1.02 [.04] |
| 382A023 | 26.9 [1.06] | 12.4 [.49] | 13.2 [.52] | 6.1 [.24] | 53.3 [2.10] | 33.0 [1.30] | 2.54 [.10] | 1.52 [.06] |
| 382A034 | 38.6 [1.52] | 18.0 [.71] | 26.9 [1.06] | 12.4 [.49] | 78.7 [3.10] | 55.9 [2.20] | 3.05 [.12] | 2.54 [.10] |
| 382A046 | 55.6 [2.19] | 25.9 [1.02] | 26.9 [1.06] | 12.7 [.50] | 111.8 [4.40] | 71.1 [2.80] | 4.57 [.18] | 2.54 [.10] |

Note: Coating is optional. As supplied dimensions appearing in table are for uncoated parts. When coating is added, entry diameters will be reduced by 1.5 [.06] max.





Catalog 1654025
Revised 3-13

www.te.com

Dimensions are shown for reference purposes only. Specifications subject to change.

Dimensions are in millimeters unless otherwise specified.

USA: +1 800 522 6752
Asia Pacific: +86 0 400 820 6015
UK: +44 800 267 666

For additional support numbers please visit www.te.com

## 382C312, 322 and 332

### Slimline Y Transition

As Supplied (a)

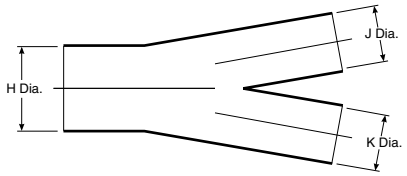


After Unrestricted Recovery (b)

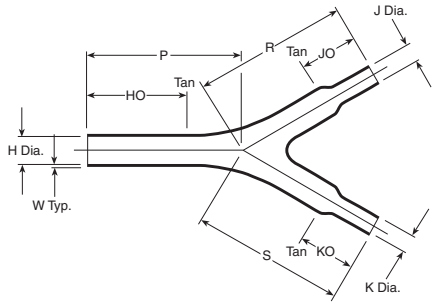


382C322, 382C332

After Unrestricted Recovery (b)

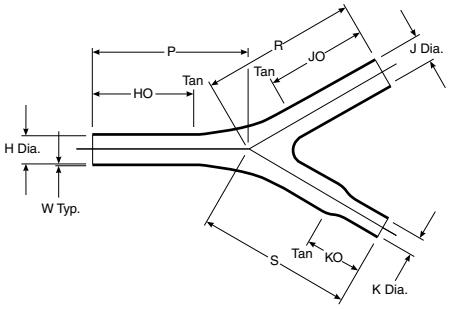


382C312

### Applications

Provides strain relief and mechanical protection at two into one Y junctions in cable harness assemblies. When used with adhesive it provides environmental sealing. These parts are based on the 382A3 range. They have the branched outlet(s) reduced in size to accommodate smaller cable diameters without the need for packing or shimming.

### Materials Available

| Material | Material Description | Precoating No. | Adhesive Part No. |
|---|---|---|---|
| -50 | Fluoroelastomer polymer blend | N/A | S-1125 |
| -51 | Elastomer polymer blend | /164 | S-1124 |
| -71 | Flexible polyolefin | /42 or /86 | S-1017 or S-1048 |
| -125 | Fluoropolymer | N/A | S-1255-04 |

### Product Dimensions

| Part No. | H | | J | | K | | P, R & S | KO | HO & JO | W |
|---|---|---|---|---|---|---|---|---|---|---|
| | Min. a | Max. b | Min. a | Max. b | Min. a | Max. b | Nom. b | ±15% b | ±15% b | Nom b |
| 382C312 | 1.20 [30.5] | .45 [11.4] | .90 [22.9] | .45 [11.4] | .60 [15.2] | .30 [7.6] | 2.48 [63.0] | .85 [21.6] | 1.62 [41.1] | .04 [1.0] |

| Part No. | H | | J & K | | P, R & S | HO | JO & KO | W |
|---|---|---|---|---|---|---|---|---|
| | Min. a | Max. b | Min. a | Max. b | Nom. b | ±15% b | ±15% b | Nom. b |
| 382C322 | .90 [22.9] | .45 [11.4] | .40 [10.2] | .20 [5.1] | 2.48 [63.0] | 1.62 [41.1] | .85 [21.6] | .04 [1.0] |

| Part No. | H | | J & K | | P, R & S | HO | JO & KO | W |
|---|---|---|---|---|---|---|---|---|
| | Min. a | Max. b | Min. a | Max. b | Nom. b | ±15% b | ±15% b | Nom. b |
| 382C332 | 1.00 [25.4] | .45 [11.4] | .60 [15.2] | .30 [7.5] | 2.48 [63.0] | 1.62 [41.1] | .85 [21.6] | .04 [1.0] |

Note: Coating is optional. As supplied dimensions appearing in table are for uncoated parts. When coating is added, entry diameters will be reduced by 1.5 [.06] max.



Dimensions are shown for reference purposes only. Specifications subject to change.

Dimensions are in millimeters unless otherwise specified.

USA: +1 800 522 6752
Asia Pacific: +86 0 400 820 6015
UK: +44 800 267 666

For additional support numbers please visit www.te.com

## 462A011 to 060

### Transition, One to Three Cables

As Supplied (a)

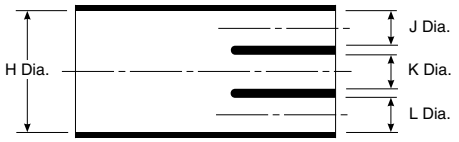


After Unrestricted Recovery (b)

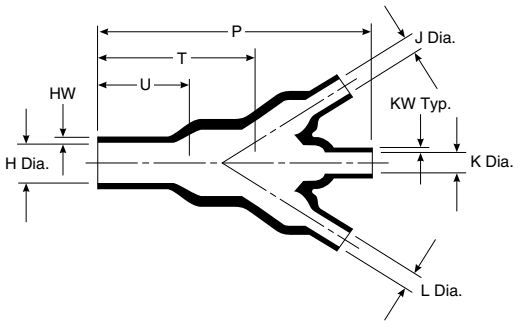


### Applications

Provides strain relief and mechanical protection on cable harness assemblies.

### Materials Available

| Material* | Material Description | Precoating No. | Adhesive Part No.** |
|---|---|---|---|
| -3 | Semirigid polyolefin | /42 or /86 | S-1017 or S-1048 |
| -4 | Flexible polyolefin | /42 or /86 | S-1017 or S-1048 |
| -12 | Fluoroelastomer | N/A | S-1255-04 |
| -25 | Fluid-resistant elastomer | /42 or /86 or /225 | S-1017 or S-1048 or S-1125 |
| -100 | Polyolefin, Zerohal | /86 or /180 | S-1048 or S-1030 |

*For more information, please see the appropriate material page in this section.
**For more information, please see section 5.

### Product Dimensions

| Part No. | H Min. a | H Max. b | J, K&L Min. a | J, K&L Max. b | P ±10% b |
|---|---|---|---|---|---|
| 462A011 | 13.2 [.52] | 6.6 [.26] | 6.6 [.26] | 3.6 [.14] | 46.2 [1.82] |
| 462A023 | 26.9 [1.06] | 13.2 [.52] | 13.2 [.52] | 6.9 [.27] | 93.2 [3.67] |
| 462A034 | 38.6 [1.52] | 18.8 [.74] | 19.3 [.76] | 9.7 [.38] | 135.1 [5.32] |
| 462A046 | 55.6 [2.19] | 25.4 [1.00] | 26.9 [1.06] | 12.4 [.49] | 192.0 [7.56] |
| 462A060 | 91.4 [3.60] | 54.6 [2.15] | 45.7 [1.80] | 27.4 [1.08] | 390.4 [15.37] |

| Part No. | T ±10% b | U ±10% b | HW ±20% b | KW ±10% b |
|---|---|---|---|---|
| 462A011 | 30.5 [1.20] | 15.7 [.62] | 1.52 [.06] | 1.02 [.04] |
| 462A023 | 57.2 [2.25] | 33.0 [1.30] | 2.54 [.10] | 1.52 [.06] |
| 462A034 | 88.9 [3.50] | 45.7 [1.80] | 3.05 [.12] | 1.78 [.07] |
| 462A046 | 121.9 [4.80] | 71.1 [2.80] | 4.57 [.18] | 3.05 [.12] |
| 462A060 | 254.0 [10.00] | 127.0 [5.00] | 7.11 [.28] | 4.57 [.18] |

Note: Coating is optional. As supplied dimensions appearing in table are for uncoated parts. When coating is added, entry diameters will be reduced by 1.5 [.06] max.





Catalog 1654025
Revised 3-13

www.te.com

Dimensions are shown for reference purposes only. Specifications subject to change.

Dimensions are in millimeters unless otherwise specified.

USA: +1 800 522 6752
Asia Pacific: +86 0 400 820 6015
UK: +44 800 267 666

For additional support numbers please visit www.te.com

## 462A421 to 424

### Slimline Transition, One to Three Cables

**As Supplied (a)**

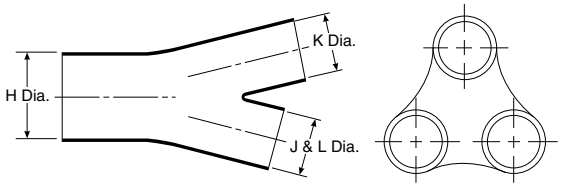


**After Unrestricted Recovery (b)**

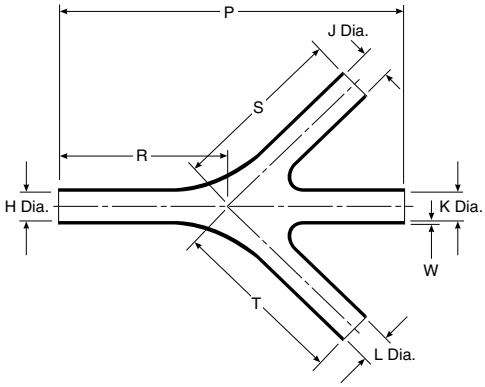


### Applications

Provides strain relief and mechanical protection on cable harness assemblies.

### Materials Available

| Material* | Material Description | Precoating No. | Adhesive Part No.** |
|---|---|---|---|
| -50 | Fluoroelastomer polymer blend | N/A | S-1125 |
| -51 | Elastomer polymer blend | /164 | S-1124 |
| -71 | Flexible polyolefin | /42 or /86 | S-1017 or S-1048 |

### Product Dimensions

| Part No. | H | | J, K & L | | W | P | R, S & T |
|---|---|---|---|---|---|---|---|
| | Min. a | Max. b | Min. a | Max. b | Nom. b | Nom. b | Nom. b |
| 462A421 | 19.8 [.78] | 6.6 [.26] | 13.2 [.52] | 6.6 [.26] | 1.0 [.04] | 85.9 [3.38] | 42.9 [1.69] |
| 462A422 | 34.3 [1.35] | 11.4 [.45] | 20.6 [.81] | 11.4 [.45] | 1.3 [.05] | 135.6 [5.34] | 67.8 [2.67] |
| 462A423 | 60.2 [2.37] | 20.1 [.79] | 36.1 [1.42] | 20.1 [.79] | 1.5 [.06] | 207.3 [8.16] | 103.6 [4.08] |
| 462A424* | 99.8 [3.93] | 33.3 [1.31] | 54.9 [2.16] | 33.3 [1.31] | 1.8 [.07] | 207.2 [8.16] | 103.6 [4.08] |

*-01 modification only

### Materials Available

| Material* | Material Description | Precoating No. | Adhesive Part No.** |
|---|---|---|---|
| -125 | Fluoropolymer | — | S-1255-04 |

*For more information, please see the appropriate material page in this section.
**For more information, please see section 5.

### Product Dimensions

| Part No. | H | | J, K & L | | W | P | R, S & T |
|---|---|---|---|---|---|---|---|
| | Min. a | Max. b | Min. a | Max. b | Nom. b | Nom. b | Nom. b |
| 462A421 | 19.8 [.78] | 6.6 [.26] | 13.2 [.52] | 6.6 [.26] | 1.0 [.04] | 85.9 [3.38] | 42.9 [1.69] |
| 462A422 | 34.3 [1.35] | 11.4 [.45] | 20.6 [.81] | 11.4 [.45] | 1.3 [.05] | 135.6 [5.34] | 67.8 [2.67] |
| 462A423 | 60.2 [2.37] | 20.1 [.79] | 36.1 [1.42] | 20.1 [.79] | 1.5 [.06] | 207.3 [8.16] | 103.6 [4.08] |

Note: Coating is optional. As supplied dimensions appearing in table are for uncoated parts. When coating is added, entry diameters will be reduced by 1.5 [.06] max.



Dimensions are shown for reference purposes only. Specifications subject to change.

Dimensions are in millimeters unless otherwise specified.

USA: +1 800 522 6752
Asia Pacific: +86 0 400 820 6015
UK: +44 800 267 666

For additional support numbers please visit www.te.com

## 562A011 to 067

### Transition, One to Four Cables

**As Supplied (a)**

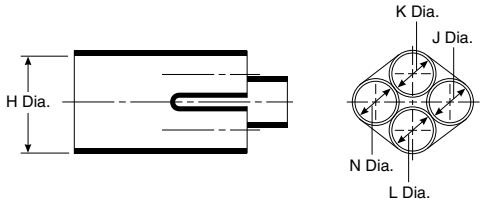


**After Unrestricted Recovery (b)**

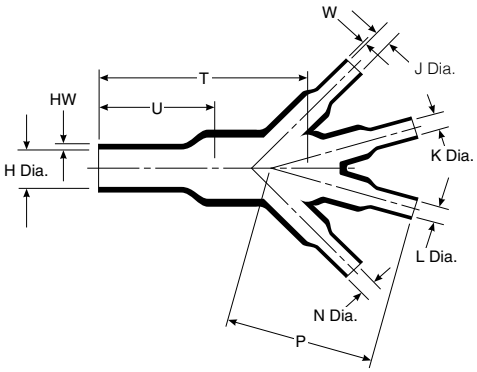


### Applications

Provides strain relief and mechanical protection on cable harness assemblies.

### Materials Available

| Material* | Material Description | Precoating No. | Adhesive Part No.** |
|---|---|---|---|
| -3 | Semirigid polyolefin | /42 or /86 | S-1017 or S-1048 |
| -4 | Flexible polyolefin | /42 or /86 | S-1017 or S-1048 |
| -12 | Fluoroelastomer | N/A | S-1255-04 |
| -25 | Fluid-resistant elastomer | /42 or /86 or /225 | S-1017 or S-1048 or S-1125 |
| -100 | Polyolefin, Zerohal | /86 or /180 | S-1048 or S-1030 |

*For more information, please see the appropriate material page in this section.
**For more information, please see section 5.

### Product Dimensions

| Part No. | H Min. a | H Max. b | J, K, L & N Min. a | J, K, L & N Max. b | P ±10% b | T ±10% b | U ±10% b | HW ±20% b | W ±20% b |
|---|---|---|---|---|---|---|---|---|---|
| 562A011 | 13.2 [.52] | 6.9 [.27] | 6.6 [.26] | 3.4 [.14] | 24.1 [.95] | 43.9 [1.73] | 18.0 [.71] | 1.52 [.06] | 1.02 [.04] |
| 562A022 | 19.3 [.76] | 9.7 [.38] | 9.4 [.37] | 5.3 [.21] | 35.6 [1.40] | 43.2 [1.70] | 23.1 [.91] | 1.78 [.07] | 1.02 [.04] |
| 562A032 | 19.3 [.76] | 9.7 [.38] | 13.2 [.52] | 6.9 [.27] | 49.3 [1.94] | 50.5 [1.99] | 25.4 [1.00] | 1.78 [.07] | 1.52 [.06] |
| 562A043 | 26.9 [1.06] | 13.0 [.51] | 13.2 [.52] | 6.9 [.27] | 49.3 [1.94] | 65.8 [2.59] | 33.5 [1.32] | 2.54 [.10] | 1.52 [.06] |
| 562A054 | 38.6 [1.52] | 18.5 [.73] | 19.3 [.76] | 9.7 [.38] | 71.9 [2.83] | 95.3 [3.75] | 46.5 [1.83] | 3.05 [.12] | 1.78 [.07] |
| 562A067 | 55.6 [2.19] | 26.7 [1.05] | 26.9 [1.06] | 13.0 [.51] | 101.6 [4.00] | 135.1 [5.32] | 65.5 [2.58] | 4.57 [.18] | 2.54 [.10] |

Note: Coating is optional. As supplied dimensions appearing in table are for uncoated parts. When coating is added, entry diameters will be reduced by 1.5 [.06] max.





Catalog 1654025
Revised 3-13

www.te.com

Dimensions are shown for reference purposes only. Specifications subject to change.

Dimensions are in millimeters unless otherwise specified.

USA: +1 800 522 6752
Asia Pacific: +86 0 400 820 6015
UK: +44 800 267 666

For additional support numbers please visit www.te.com

## QFT

### Configurable Heat-Shrink Transition

### Product Facts

- Configurable heat-shrink transition
- Low cost commercial polyolefin
- 80°C [176°F] shrink temperature
- High shrink ratio
- Specially engineered easy-to-use crimp tool

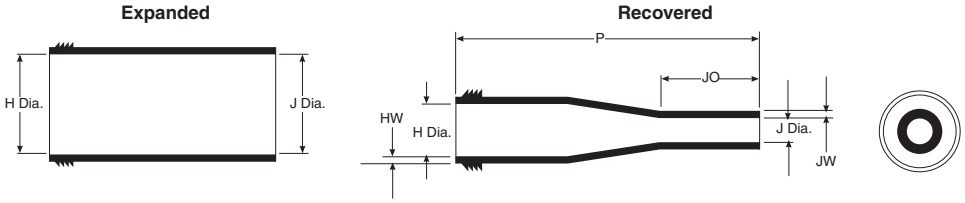


### Applications

QFT heat-shrinkable transitions form a watertight seal protecting cable splices from corrosion and mechanical abuse while providing excellent electrical insulating properties. QFT products use special crimps that allow them to be employed as 1:2, 1:3, and even 1:4 transitions. With their high shrink ratio and crimps the configurable QFT product line can accommodate almost all of your transition needs with only 3 product sizes.

### Operating Temperature Range

-20°C to 70°C
[-4°F to 158°F]

### Specifications/Approvals

| | | |
|---|---|---|
| TE | RW 2008 | Molded Part |
| | RT1050/1 | Adhesive |

### Temperature Ratings

| | |
|---|---|
| Operating temperature range | -20°C to 70°C [-4°F to 158°F] (125°C [257°F] without sealant) |
| Minimum recovery temperature | 55°C [131°F] |
| Maximum storage temperature | 40°C [104°F] |

### Dimensions Table

| | H | | J | | P | JO | HW | JW |
|---|---|---|---|---|---|---|---|---|
| | Min. | Max. | Min. | Max. | +/- 10% | +/- 10% | +/- 20% | +/- 20% |
| QFT1 | 31.0 [1.22] | 9.0 [.35] | 31.0 [1.22] | 4.4 [.17] | 60.0 [2.36] | 12.0 [.47] | 1.5 [.06] | 1.0 [.039] |
| QFT2 | 43.0 [1.69] | 14.0 [.55] | 43.0 [1.69] | 7.0 [.28] | 75.0 [2.95] | 18.0 [.71] | 1.8 [.07] | 1.0 [.039] |
| QFT3 | 57.0 [2.24] | 24.0 [.95] | 57.0 [2.24] | 12.0 [.47] | 90.0 [3.53] | 25.0 [.98] | 1.8 [.07] | 1.0 [.039] |



Catalog 1654025
Revised 3-13

www.te.com

Dimensions are shown for reference purposes only. Specifications subject to change.

Dimensions are in millimeters unless otherwise specified.

USA: +1 800 522 6752
Asia Pacific: +86 0 400 820 6015
UK: +44 800 267 666

For additional support numbers please visit www.te.com

## QFT (Continued)

### Typical QFT Performance

| | Property | Performance | Test method |
|---|---|---|---|
| Physical | Tensile strength | 10 MPa (1500psi) minimum | ISO 37 |
| | Ultimate elongation | 250% minimum | ISO 37 |
| | Longitudinal change | 0 to 20% maximum | ISO 1183 |
| | Specific gravity | 1.4 maximum | ISO 1183 |
| | Heat aging | Minimum 200% ultimate elongation | ISO 188 |
| | 168 hours at 120°C [248°F] | Tensile Strength 10 MPa min. | ISO 37 |
| | Heat shock<br>4 hours at 105°C | No cracking, dripping or flowing | ASTM D 2671 |
| Electrical | Dielectric strength | 8MV/m minimum | IEC 243-1 |
| Chemical | Fluid resistance 1 | (24 +/- 2h immersion at 23C+/- 2C) | ISO 1817 |
| | Engine Oil | (SAE 20W/50) | — |
| | Hydraulic Fluid<br>Tensile Strength | 10 MPa minimum | ISO 37 |
| | Ultimate Elongation | 200% minimum | — |
| | Fluid resistance 2 | (30 +/- 3m immersion at 23C+/- 2C) | ISO 1817 |
| | Automotive gasoline | (BS 4040) | — |
| | Diesel fuel | (BS 2869) | — |
| | Cleaning fluid | (TL 6850-07) | — |
| | Antifreeze | (Ethylene Glycol/Water 50/50 v/v) | — |
| | Engine cleaning fluid<br>Tensile strength | (Gunk)<br>10 MPa minimum | ISO 37 |
| | Ultimate elongation | 200% minimum | — |

### Part Numbering System

**QFT3 - 130/42 - 0***

- Color
- Adhesive
- Material
- Size
- Product name

*Available in bulk pack, part number QFT3-130/42-0-B500 (US and UK).

### Ordering Information

| | | |
|---|---|---|
| Color | Standard | Black (-0) |
| | Code | 0 |
| Packaging | Standard | 10 pieces per bag, 30 clips |
| | Bulk pack | 500 pieces per box and 500 clips per bag (clips ordered separately) - contact TE for details |
| Crimp tool | QFT-Crimp-Tool-Manual (069172-000) | — |





Catalog 1654025
Revised 3-13

www.te.com

Dimensions are shown for reference purposes only. Specifications subject to change.

Dimensions are in millimeters unless otherwise specified.

USA: +1 800 522 6752
Asia Pacific: +86 0 400 820 6015
UK: +44 800 267 666

For additional support numbers please visit www.te.com

## SSB, D, T, F to 8S

### Heavy Duty Breakout Boots

### Product Facts

- Watertight
- Easy installation, requiring no special skills
- Compatibility with polyethylene, PVC, lead, steel, aluminum, standard Navy cable jackets, and copper wire and cable
- Four configurations and twelve sizes
- Minimum shrink temperature of 121°C [250°F]
- Type approval by:
  - ABS (American Bureau of Shipping)
  - DNV (Det Norske Veritas)
  - Lloyd's (Lloyd's Register of Shipping)

### Applications

These flame-retardant heat-shrinkable transitions are especially designed for shipboard applications and meet or exceed all of the U.S. Navy specifications described in MIL-I-81765/1A (as of 5/02). The transitions are made of a rugged, thermally stabilized, modified polyolefin and factory-coated with a thermoplastic adhesive sealant. As a result, they offer excellent water sealing, mechanical abrasion-protection, corrosion-resistance, weatherproofing, and electrical insulation. The transitions replace tapes, epoxies, and grease in applications involving cable breakouts, transitions, and terminations.



Catalog 1654025
Revised 3-13

www.te.com

Dimensions are shown for reference purposes only. Specifications subject to change.

Dimensions are in millimeters unless otherwise specified.

USA: +1 800 522 6752
Asia Pacific: +86 0 400 820 6015
UK: +44 800 267 666

For additional support numbers please visit www.te.com

## SSB, D, T, F to 8S (Continued)

### Specifications/Approvals

| Commercial | Military |
|---|---|
| RW-2024 | MIL-STD-2003 |
| | MIL-I-81765/1A |

### Product Dimensions

| Description | Number of Legs | ID Base | | ID legs | | Leg | Length Body |
|---|---|---|---|---|---|---|---|
| | | Min. Exp. | Max. Rec. | Min. Exp. | Max. Rec. | | |
| SSB-1202 FR | 2 | 40.64[1.60] | 11.43 [0.45] | 13.97[0.55] | 3.81[0.15] | 36.83[1.45] | 62.23[2.45] |
| SSB-2002 FR | 2 | 50.8[2.00] | 35.56[1.40] | 19.05[0.75] | 8.89[0.35] | 69.85[2.75] | 88.90[3.50] |
| D3-9 FR | 2 | 20.32[0.80] | 9.39[0.37] | 8.38[0.33] | 2.79[0.11] | 17.78[0.7] | 50.8[2] |
| D14-30 FR | 2 | 30.48[1.2] | 15.24[0.6] | 12.7[0.5] | 4.32[0.17] | 25.4[1] | 63.5[2.5] |
| D50-100 FR | 2 | 48.26[1.9] | 22.86[0.9] | 19.05[0.75] | 7.62[0.3] | 30.48[1.2] | 76.2[3] |
| D200-400 FR | 2 | 76.2[3] | 38.1[1.5] | 36.83[1.45] | 12.7[0.5] | 38.1[1.5] | 88.9[3.5] |
| T3-9 FR | 3 | 22.86[0.9] | 9.14[0.36] | 8.38[0.33] | 2.29[0.09] | 19.05[0.75] | 50.80[2.0] |
| T14-23 FR | 3 | 30.48[1.2] | 17.78[0.70] | 12.70[0.5] | 4.57[0.18] | 25.4[1] | 60.96[2.40] |
| T14-50 FR | 3 | 38.1[1.5] | 12.7[0.5] | 16.51[0.65] | 4.06[0.16] | 30.48[1.2] | 76.2[2.3] |
| T42-100 FR | 3 | 43.18[1.7] | 22.86[0.9] | 20.32[0.8] | 4.83[0.19] | 30.48[1.25] | 57.15[2.25] |
| T150-300 FR | 3 | 60.96[2.4] | 35.56[1.4] | 30.48[1.25] | 12.70[0.5] | 40.6[1.6] | 88.90[3.50] |
| T-400 FR | 3 | 81.28[3.2] | 50.8[2] | 35.56[1.4] | 17.78[0.7] | 40.6[1.6] | 88.9[3.5] |
| T500-600 FR | 3 | 124.46[4.90] | 58.93[2.32] | 50.8[2] | 22.86[0.9] | 50.8[2] | 187.96[7.40] |
| F3-9 FR | 4 | 22.86[0.9] | 10.92[0.43] | 7.11[0.28] | 2.79[0.11] | 19.05[0.75] | 50.8[2] |
| F-23 FR | 4 | 31.75[1.25] | 20.32[0.8] | 12.7[0.5] | 5.08[0.2] | 27.94[1.1] | 63.50[2.50] |
| F42-60 FR | 4 | 44.45[1.75] | 25.4[1] | 20.32[0.8] | 8.13[0.32] | 30.48[1.25] | 63.50[2.50] |
| F75-100 FR | 4 | 59.69[2.35] | 25.4[1] | 25.4[1] | 8.89[0.35] | 43.18[1.7] | 165.1[6.5] |
| F133-200 FR | 4 | 67.31[2.65] | 35.56[1.4] | 30.48[1.2] | 10.92[0.43] | 38.1[1.5] | 91.44[3.6] |
| F150-400 FR | 4 | 133.35[5.25] | 76.2[3] | 34.29[1.35] | 13.97[0.55] | 76.2[3] | 152.4[6] |
| 6S100-200 FR | 6 | 60.96[2.4] | 36.83[1.45] | 20.32[0.8] | 8.89[0.35] | 69.85[2.75] | 86.36[3.4] |
| 8S23-75 FR | 8 | 35.56[1.4] | 21.59[0.85] | 10.16[0.4] | 3.3[0.13] | 30.48[1.25] | 50.8[2] |
| 8S14-50 FR | 8 | 57.15[2.25] | 21.59[0.85] | 14.22[0.56] | 3.3[0.13] | 30.48[1.25] | 50.8[2] |
| 8S42-100 FR | 8 | 63.50[2.50] | 21.59[0.85] | 22.1[0.87] | 3.3[0.13] | 30.48[1.25] | 50.8[2] |





Catalog 1654025
Revised 3-13

www.te.com

Dimensions are shown for reference purposes only. Specifications subject to change.

Dimensions are in millimeters unless otherwise specified.

USA: +1 800 522 6752
Asia Pacific: +86 0 400 820 6015
UK: +44 800 267 666

For additional support numbers please visit www.te.com

## 202W302 to 342

### Heat-Shrink Bobbins

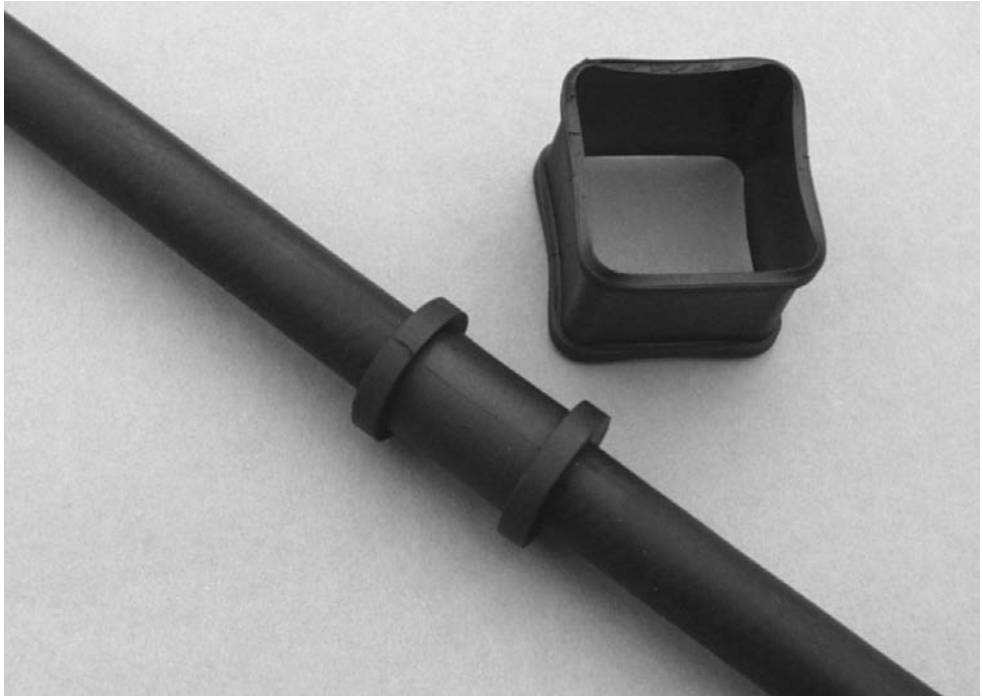

**Product Facts**

- Good abrasion resistance
- Fits range of diameters
- Excellent location, cushioning and protection of cable or hoses from P clips and wire ties
- Low cost, high volume installation
- Shrinks onto hose/pipe/wire harnesses
- Good mechanical, thermal and chemical properties
- Stays in place
- No expensive tooling required

**As Supplied (a)**

**After Unrestricted Recovery (b)**

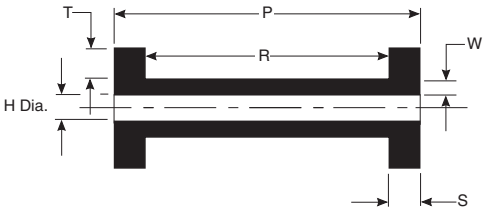


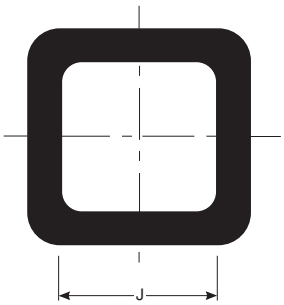


Square expanded = -130 material

Circular expanded = -12 and -25 material
-3, -4



Catalog 1654025
Revised 3-13

www.te.com

Dimensions are shown for reference purposes only. Specifications subject to change.

Dimensions are in millimeters unless otherwise specified.

USA: +1 800 522 6752
Asia Pacific: +86 0 400 820 6015
UK: +44 800 267 666

For additional support numbers please visit www.te.com

## 202W302 to 342 (Continued)

### Materials Available

| Material | Material Description | Precoating No. | Adhesive Part No. |
|---|---|---|---|
| -3 | Polyolefin, semi-rigid | /42, /86 | S-1017, S-1048 |
| -4 | Polyolefin, flexible | /42, /86 | S-1017, S-1048 |
| -12 | Fluoroelastomer | N/A | S-1255-04 |
| -25 | Fluid resistant elastomer | /86 or /225 | S-1017 or S-1048 or S-1125 |
| -130 | Flexible polyolefin | /42, /86 | S-1017 |

### Product Dimensions

| Part No. | H | | J | P | R | S | T | W | Recommended Hose Sizes | |
|---|---|---|---|---|---|---|---|---|---|---|
| | Min. a | Max. b | Min. a | ±10% b | ±10% b | ±10% b | ±10% b | ±20% b | Min. | Max. |
| 202W302 | 29.0 [1.142] | 9.5 [.374] | 29.0 [1.142] | 35.0 [1.378] | 25.0 [.984] | 5.0 [.197] | 3.0 [.118] | 1.5 [.059] | 11.0 [.433] | 25.0 [.984] |
| 202W312 | 39.0 [1.535] | 12.7 [.500] | 39.0 [1.535] | 35.0 [1.378] | 25.0 [.984] | 5.0 [.197] | 3.0 [.118] | 2.0 [.079] | 14.0 [.551] | 34.0 [1.339] |
| 202W321 | 10.0 [.394] | 3.0 [.118] | 10.0 [.394] | 29.0 [1.142] | 23.0 [.906] | 3.0 [.118] | 3.0 [.118] | 1.5 [.059] | 4.0 [.157] | 8.0 [.315] |
| 202W331 | 19.0 [.748] | 6.4 [.252] | 19.0 [.748] | 29.0 [1.142] | 24.0 [.945] | 2.5 [.098] | 2.0 [.079] | 1.5 [.059] | 8.0 [.315] | 17.0 [.669] |
| 202W342 | 54.0 [2.126] | 18.0 [.709] | 54.0 [2.126] | 35.0 [1.378] | 25.0 [.984] | 5.0 [.197] | 3.0 [.118] | 2.0 [.079] | 20.0 [.787] | 48.0 [1.889] |

Note: Coating is optional. As supplied dimensions appearing in table are for uncoated parts. When coating is added, entry diameters will be reduced by 1.5 [.06] max.





Catalog 1654025
Revised 3-13

www.te.com

Dimensions are shown for reference purposes only. Specifications subject to change.

Dimensions are in millimeters unless otherwise specified.

USA: +1 800 522 6752
Asia Pacific: +86 0 400 820 6015
UK: +44 800 267 666

For additional support numbers please visit www.te.com

## 400W242

### Heat-Shrink Positioning Ring

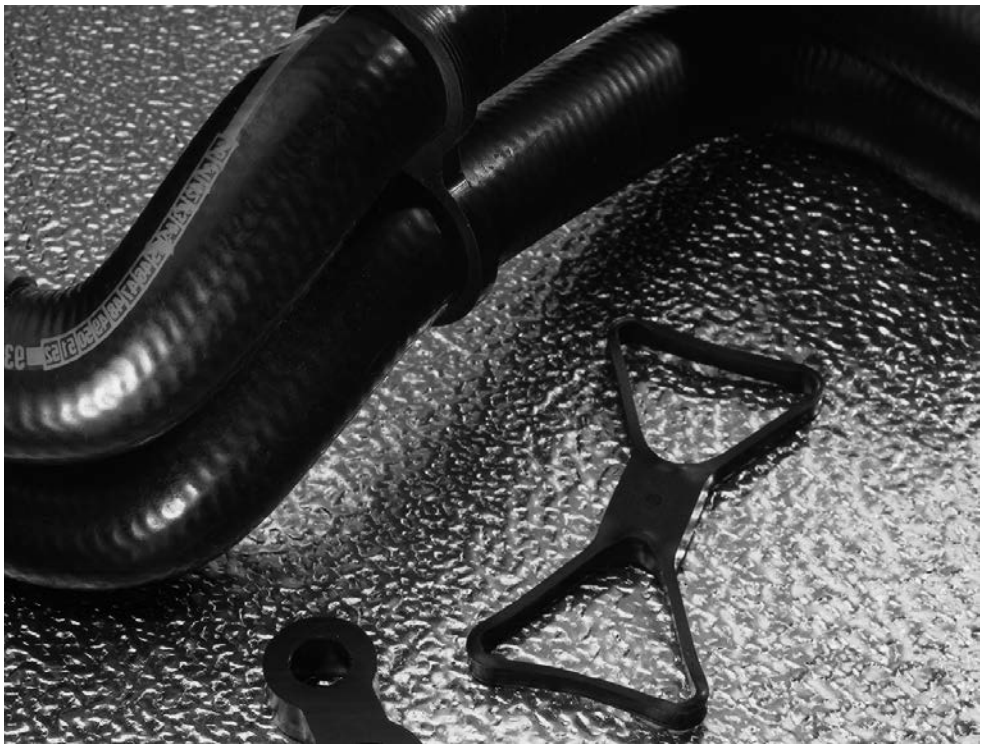

### Product Facts

- Easy to install
- Bundles hoses/pipe
- Fits range of diameters due to high expansion
- Low cost, high volume installation
- Shrinks onto hose/pipe
- Minimum distance between substrates
- Good mechanical, thermal and chemical properties
- Push on fit to hose/pipe
- Stays in place when installed
- No expensive tooling required
- Keeps hoses/pipes together, optimizing space
- Twinning two hoses/pipes rationalizes part descriptions
- Hose/pipe can be orientated correctly for ease of fitting to vehicle
- Vibration damping

**As Supplied (a)**

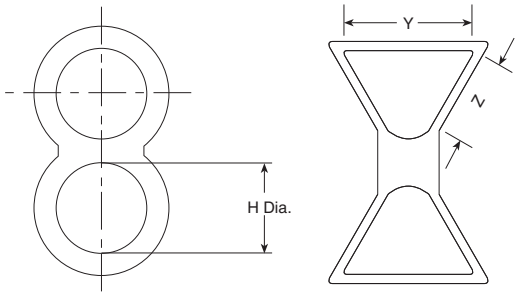


-3, -4, -25, -100 -130

**After Unrestricted Recovery (b)**

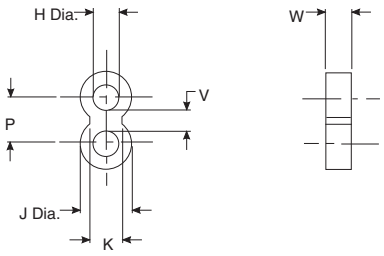




Catalog 1654025
Revised 3-13

www.te.com

Dimensions are shown for reference purposes only. Specifications subject to change.

Dimensions are in millimeters unless otherwise specified.

USA: +1 800 522 6752
Asia Pacific: +86 0 400 820 6015
UK: +44 800 267 666

For additional support numbers please visit www.te.com

## 400W242 (Continued)

### Materials Available

| Material | Material Description | Precoating no. | Adhesive part no. |
|---|---|---|---|
| -3 | Polyolefin, semi-rigid | /42, /86 | S-1017 or S-1048 |
| -4 | Polyolefin, flexible | /42, /86 | S-1017 or S-1048 |
| -25 | Elastomer, fluid resistant | /86, /225 | S-1017 or S-1048 |
| -100 | Polyolefin, Zerohal | -100-CS1972 (S1030 tape supplied in bag) | S-1030 |
| -130 | Flexible polyolefin | /42, /86 | S-1017 |

As supplied dimensions are for uncoated parts, when coating is added, entry diameters will reduce by 1.5 [.06] max.

### Part Numbering System

**400W242 -**/**-0**

- **Adhesive Slash Number** (if required see compatibility chart)
- **Material Dash Number** (see compatibility chart)
- **Base Part Number**

### Product Dimensions

| Part No. | H Min. a | H Max. b | J Max. b | K ± 1.2 b | P ± 1.7 b | V ± 0.45 b | W ± 1 b | Y* ± 2 a | Z* ± 2 a |
|---|---|---|---|---|---|---|---|---|---|
| 400W242 | 28 [1.102] | 10.2 [.402] | 19.3 [.760] | 12 [.472] | 17 [.669] | 7.0 [.276] | 10 [.394] | 29 [1.142] | 25 [.984] |

*Applicable for -130 only.





Catalog 1654025
Revised 3-13

www.te.com

Dimensions are shown for reference purposes only. Specifications subject to change.

Dimensions are in millimeters unless otherwise specified.

USA: +1 800 522 6752
Asia Pacific: +86 0 400 820 6015
UK: +44 800 267 666

For additional support numbers please visit www.te.com

## RayOLOn Kits

### Roll-On Sealing Sleeve

### Product Facts

- Heatless sealing solution
- Re-useable sealing solution
- Roll-on to seal, roll-off to re-enter
- Enhanced sealing with gel strips
- Protection of connectors and splices against corrosion
- Available in many conveniently packaged kits

### Applications

RayOLOn re-useable roll-on sealing sleeves are a family of products designed to protect connectors, electrical cable splices, and other cylindrical substrates from harsh environmental elements like salt spray and water moisture. RayOLOn sleeves are a part of TE "heatless" sealing products that require no heat guns or torches. This is useful in the areas where the use of motorized heat sources or open flames are prohibited or undesirable.

RayOLOn sealing sleeves provide the sealing of the substrates by simply rolling the sleeve over the area to be protected. If the substrate requires servicing, the sleeve can be rolled off to provide access to the component under the sleeve. After the service is completed, the sleeve can be rolled on the part again to provide the protection. This operation may be done many times throughout the life of the sleeve providing time and material cost savings.

### Operating Temperature Range

-40°C to 70°C
[-40°F to 158°F]

### Specifications and Approvals

| | |
|---|---|
| TE | RW-3031 |

### Temperature Ratings

| | |
|---|---|
| Continuous operating temperature range | -40°C to 70°C [-40°F to 158°F] |
| Short term temperature exposure | -63°C to 90°C [-81°F to 194°F] |
| Minimum installation | -25°C [-13°F] |

### Sleeve Dimensions Inches (millimeters)

| Base Part No. | Available Kits | Dimensions (Reference) | | Recommended Use Range | Connection Length |
|---|---|---|---|---|---|
| | | Diameter | Lengths | | |
| LNCL-11-125 | GK | 0.51 [13.0] | 4.92 [125] | 0.22 - 0.68 [6 - 17] | 3.00 [75] |
| LNCL-11-205 | GK | 0.51 [13.0] | 8.07 [205] | 0.22 - 0.68 [6 - 17] | 6.00 [150] |
| LNCL-12-140 | GK, CK-N | 0.56 [14.2] | 5.51 [140] | 0.48 - 0.90 [12 - 23] | 4.00 [100] |
| LNCL-12-240 | GK, CK-N | 0.56 [14.2] | 9.45 [240] | 0.48 - 0.90 [12 - 23] | 7.00 [175] |
| LNCL-13-155 | GK, TK-8 | 0.75 [19.0] | 6.10 [155] | 0.69 - 1.20 [18 - 30] | 4.00 [100] |
| LNCL-13-305 | GK | 0.75 [19.0] | 12.00 [305] | 0.69 - 1.20 [18 - 30] | 9.00 [225] |
| LNCL-14-185 | GK, TK-7 | 1.02 [25.9] | 7.28 [185] | 0.96 -1.50 [25 - 38] | 5.00 [125] |
| LNCL-14-355 | GK | 1.02 [25.9] | 14.00 [355] | 0.96 -1.50 [25 - 38] | 10.0 [250] |
| LNCL-15-185 | GK, TK-1, TK-5, TK-6 | 1.45 [36.8] | 7.28 [185] | 1.40 - 2.00 [36 - 46] | 5.00 [125] |
| LNCL-15-260 | GK, SS | 1.45 [36.8] | 10.2 [260] | 1.40 - 2.00 [36 - 46] | 7.50 [190] |
| LNCL-15-450 | GK, SS | 1.45 [36.8] | 17.72 [450] | 1.40 - 2.00 [36 - 46] | 12.0 [300] |

Refer to TE specification control drawing LNCL-XX-125 thru LNCL-XX-450 for more details.
*TE Gel and Sealant product information available at www.te.com



Dimensions are shown for reference purposes only. Specifications subject to change.

Dimensions are in millimeters unless otherwise specified.

USA: +1 800 522 6752
Asia Pacific: +86 0 400 820 6015
UK: +44 800 267 666

For additional support numbers please visit www.te.com

## RayOLOn Kits (Continued)

### Typical RayOLOn Roll-On Sealing Sleeve Properties

| | Property | Performance | Test method |
|---|---|---|---|
| Physical/ Chemical | Tensile strength | 8.3 MPa (1200 psi) minimum | ASTM D 2671 |
| | Ultimate elongation | 100 % minimum | ASTM D 412 |
| | Density | 1.1 g/cm3 maximum | ASTM D 792 |
| | Water absorption 24 hours at 23°C [73°F] | 0.5 % maximum | ASTM D 570 |
| | Flammability | 40 mm/min maximum | ASTM D 635 |
| Electrical | Dielectric strength | 90 kV/cm (225 V/mil) minimum | ASTM D 149 |
| | Volume resistivity | 1x1012 Ω-cm | ASTM D 257 |

Refer to TE specification RW-3031 for more requirements and performance information.
Notes:
1. The sleeve is not intended to be heated during the installation process.
2. DO NOT CUT LNCL roll-on sealing sleeve.
3. In case of a conflict between this data sheet and RW-3031, RW-3031 takes precedence.
4. Not recommended for extended exposure to hydrocarbon based fuel or fluids.

### Part Numbering System

**LNCL - XX - XXX - XX - XX**

- XX — Configuration Designator (blank if not required)
- XX — Kit Designator
- XXX — Length of Sleeve
- XX — Diameter Size Designator
- LNCL — Product Family Name

### Kits

| | |
|---|---|
| GK—General kit: | Roll-on sleeve, gel strip, cable tie, core tube, installation instruction |
| CK—Connector sealing kit: | Roll-on sleeve, cable tie, connector flange cover, gel strip, installation instruction |
| TK—Panel boot sealing kit: | Roll-on sleeve, ferrule, gel strip, cable tie, installation Instruction |
| SS—Ship-or-shore kit: | Roll-on sleeve, connection shield, installation instruction |

Note: Not all sizes and lengths are available for all kit combinations. Please refer to the table on the previous page.
Special bulk packaging can be available.





Catalog 1654025
Revised 3-13

www.te.com

Dimensions are shown for reference purposes only. Specifications subject to change.

Dimensions are in millimeters unless otherwise specified.

USA: +1 800 522 6752
Asia Pacific: +86 0 400 820 6015
UK: +44 800 267 666

For additional support numbers please visit www.te.com

## SEB

### Raychem Side Entry Bushing (SEB)

Pre-coiled side entry reusable silicone bushing designed to be used in high temperature applications where tape or other molded grommets are used.

One strip of this Side Entry Bushing replaces as much as 6 feet and 40 wraps of traditional tapes. The material is crosslinked and thermoformed to naturally conform to the tight bundle configuration of its application.

The standard Side Entry Bushing has no adhesive layer, so it is easily removed and can be re-used often after repairs have been made.

### Product Facts

- **Fewer wraps needed than conventional silicone tapes**
- **High temperature resistant silicone material rated to 180˚C**
- **Trim to fit capabilities. Fit any size saddle clamp/wire bundle combination**
- **Thermally formed so it naturally conforms to circular wire bundles**
- **Re-usable**
- **6 standard sizes available**
- **No adhesive layer for easy removal**

### Applications

Used in a non-environmentally sealed backshell (also known as a saddle clamp) and in clamping and wire management applications

### Standards & Specs

Conforms to Mil Standard AMS-DTL-23053/10 and TE RT-1140

### Ordering Information

25 per bag

### Materials

Flexible, flame-retardant, silicone elastomer strip

### Electrical

Volume resistance:
10E11 OHM-CM min.

Dielectric strength:
350 V/mil. min.

Operating temperature range:
-75°C to +180°C

### Physical or Other Properties

Durometer Shore A:
60 +/- 5

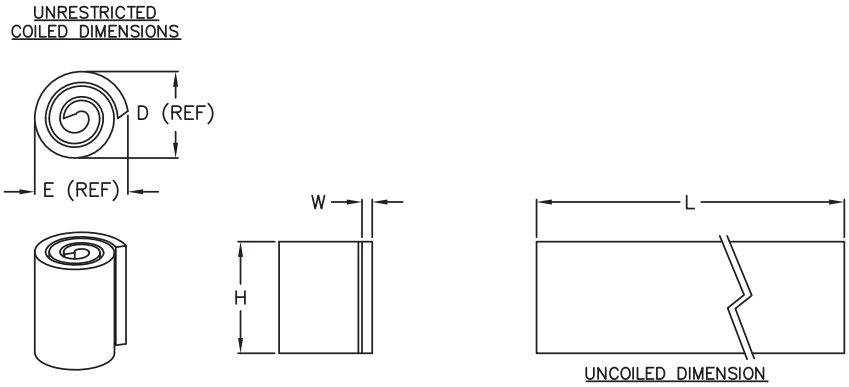


### Part Numbers

| Part Number | E Ref | D Ref | H ± 10% | L±10% | W±10% | Bundle O.D. Minimum |
|---|---|---|---|---|---|---|
| SEB-A | .27 [6.9] | .30 [7.6] | .40 [10.2] | 1.00 [25.4] | .06 [1.5] | .05 [1.3] |
| SEB-B | .35 [8.9] | .40 [10.2] | .40 [10.2] | 2.00 [50.8] | .06 [1.5] | .05 [1.3] |
| SEB-C | .48 [12.2] | .53 [13.5] | .50 [12.7] | 3.00 [76.2] | .06 [1.5] | .05 [1.3] |
| SEB-D | .55 [14.0] | .60 [15.2] | .60 [15.2] | 4.00 [101.6] | .06 [1.5] | .10 [2.5] |
| SEB-E | .65 [16.5] | .70 [17.8] | .60 [15.2] | 6.00 [152.4] | .06 [1.5] | .30 [7.6] |
| SEB-F | .85 [21.6] | .88 [22.4] | .60 [15.2] | 9.00 [228.6] | .06 [1.5] | .30 [7.6] |

Dimensions are in inches, metric in brackets.
Number of wraps will vary for each size.



Catalog 1654025
Revised 3-13

www.te.com

Dimensions are shown for reference purposes only. Specifications subject to change.

Dimensions are in millimeters unless otherwise specified.

USA: +1 800 522 6752
Asia Pacific: +86 0 400 820 6015
UK: +44 800 267 666

For additional support numbers please visit www.te.com

## shrinkHOoP

### Cable Clamp Heat-Shrink Grommet

### Product Facts

- Less assembly time
- Superior strain-relief
- Fewer errors — less rework
- No build-up taping or feeding wire through grommet
- Typical installation in just 10-20 seconds
- Re-expandable I.D. allows wire addition to a cable bundle

**Applications**

shrinkHOoP grommet (URHR) is an ultra high ratio heat-shrinkable-strain-relief grommet that can be placed over the cable assembly after the connector pinning operation is completed. The ultra-high expansion ratio material conveniently fills the space between the clamp type connector accessory and the cable. (When clamped into position, shrinkHOoP grommet provides strain relief that is more consistent and convenient than many conventional practices — for example, taping, grommet, or tape/grommet combination). The high ratio conformity of shrinkHOoP grommets will match most typical cable configurations from single conductor to the high density multiple conductor arrangements.

With shrinkHOoP grommet, repairs and rework are a snap – simply heat the grommet until soft, slide a NON-METALLIC probe through the center of the wire bundle (enlarging the grommet I.D.). Once cooled, the grommet will remain open allowing wires to be added, removed or reworked. The system can then be checked, the grommet reheated (shrinking it down again), positioned, and clamped in place.

**Operating Temperature Range**

-55°C to 135°C
[-67°F to 275°F]



Catalog 1654025
Revised 3-13

www.te.com

Dimensions are shown for reference purposes only. Specifications subject to change.

Dimensions are in millimeters unless otherwise specified.

USA: +1 800 522 6752
Asia Pacific: +86 0 400 820 6015
UK: +44 800 267 666

For additional support numbers please visit www.te.com

## shrinkHOoP (Continued)

### Specifications/Approvals

RW

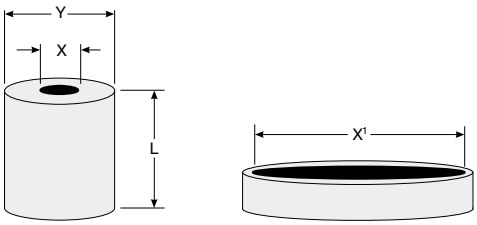


### Product Dimensions Inches (millimeters)

| Part No. | I.D. Expanded (X1) min. | I.D. Recovered (X) max. | O.D. (Y) Ref. | Length (L) Ref. | Wt. (gm) Ref. | Notes |
|---|---|---|---|---|---|---|
| URHR-1 | 1 [25] | .08 [2.1] | 0.25 [6] | 0.5 [13] | 0.75 | a) Recovered length will allow for 1.91 [0.075] either side of the collar, minimum in most cases. |
| URHR-2 | 1.23 [31] | .10 [2.6] | 0.375 [10] | 0.5 [13] | 1 | |
| URHR-3 | 1.44 [37] | .14 [3.6] | 0.5 [13] | 0.5 [13] | 1.5 | |
| URHR-4 | 1.85 [47] | 0.18 [4.7] | 0.562 [14] | 0.75 [19] | 3.5 | |
| URHR-5 | 2 [51] | 0.20 [5.1] | 0.812 [21] | 0.75 [19] | 5 | |

### Typical shrinkHOoP Grommet Performance

| | Property | Performance | Test Method |
|---|---|---|---|
| Physical | Tensile strength | 1500 psi (10.3 Mpa) | ASTM D-412 |
| | Ultimate elongation | 250% minimum | ASTM D-412 |
| | Specific gravity | 1.4 maximum | ASTM D-792 |
| | Water absorption | 0.5 % maximum | ASTM D-570 A |
| | Flammability | Pass | ASTM D-635 |
| | Corrosion resistance | Pass | ASTM D-2671 A |
| | Low temperature flex 4 hours at - 55±1°C [67±2°F] | Pass | ASTM D-2671 C |
| | Heat resistance | 200% ultimate elongation, minimum | ASTM D-2671 |
| | 168 hrs at 175±1°C [347±2°F] | 1200 psi (8.3 Mpa) tensile strength, minimum | |
| | Heat shock 4 hrs at 225±2°C [437±5°F] | No cracking, dripping or flowing | ASTM D 2671 |
| Elastic Memory | — | 275% minimum expansion to 4 inch (10 cm) of a fully recovered test specimen, and 93% recovery of expanded specimen after oven conditioning for 1 minute at 150±2°C[302 ± 4°F] | — |
| Electrical | Dielectric strength | 200 v/mil (7880 v/mm) minimum | ASTM D-876 |
| | Volume resistivity | 10 14 ohm-cm minimum | ASTM D-257 |
| Chemical Fluid Resistance | — | 200% ultimate Elongation, minimum 1200 psi (8.3 Mpa) tensile strength, minimum | ASTM F-146 |
| | Flammability* | Avg. flame time = 30 sec. max Avg. burn length = 3 in. max. Avg. flame time from drippings = 3 sec. max | FAR part 25, Appendix F, part 1 (a), section 3 |

*Applies to sizes 2, 3, and 4 only



Dimensions are shown for reference purposes only. Specifications subject to change.

Dimensions are in millimeters unless otherwise specified.

USA: +1 800 522 6752
Asia Pacific: +86 0 400 820 6015
UK: +44 800 267 666

For additional support numbers please visit www.te.com

## shrinkHOoP (Continued)

### Selection Chart

| Connector Series | Connector Size 8 (9) | 10, 12 (11, 13) | 14, 16 (15, 17) | 18, 20 (19, 21) | 22, 24, 28* |
|---|---|---|---|---|---|
| **MIL-C-5015** | | | | | |
| MS3451, 52, 56, 59 | 1 | 2 | 3 | 4 | 5 |
| MS3450 | 2 | 3 | 4 | 5 | * |
| **MIL-C-26500**** | | | | | |
| MS24266 | 1 | 2 | 3 | 4 | 5 |
| MS24264, 265 | 2 | 3 | 4 | 5 | * |
| **MIL-C-26482** | | | | | |
| MS3120, 21, 22, 26 | 1 | 2 | 3 | 4 | 5 |
| MS3470, 71, 74, 75, 76 | 1 | 2 | 3 | 4 | 5 |
| MS3124, MS3472 | 2 | 3 | 4 | 5 | * |
| **MIL-C-83723 Series I** | | | | | |
| M83723/01 & 02, 05 & 06 | 1 | 2 | 3 | 4 | 5 |
| 07 & 08, 13 & 14, 23 & 24 | 1 | 2 | 3 | 4 | 5 |
| M83723/03 & 04 | 2 | 3 | 4 | 5 | * |
| **MIL-C-83723 Series II** | | | | | |
| M83723/17 & 18, 23 & 24 | 1 | 2 | 3 | 4 | 5 |
| M83723/12 & 20, 21 & 22 | 2 | 3 | 4 | 5 | * |
| **MIL-C-83723 Series III** | | | | | |
| M83723/71 & 72 thru 97 & 98 | 1 | 2 | 3 | 4 | 5 |
| M83723/66, 67, 68 & 69 | 2 | 3 | 4 | 5 | * |
| **MIL-C-38999 Series I** | | | | | |
| MS27469 | 1 | 2 | 3 | 4 | 5 |
| MS27466, 68, 96, 27505, 27656 | 2 | 3 | 4 | 5 | * |
| **MIL-C-38999 Series II** | | | | | |
| MS27472, 97, 98, 27508, 27513 | 1 | 2 | 3 | 4 | 5 |
| MS27473, 84, 27474 | 2 | 3 | 4 | 5 | * |
| **MIL-C-38999 Series III** | | | | | |
| 38999/26 | 1 | 2 | 3 | 4 | 5 |
| 38999/20, 24 | 3 | 4 | 5 | 5 | * |
| **Boeing** | | | | | |
| BACC45, F, M, N, P, R, S, T | — | 2 | 3 | 4 | 5 |
| BACC 63X | — | 3 | 4 | 5 | * |
| **Boeing** | | | | | |
| DC39, 31, 34, 35, 50-57 | 1 | 2 | 3 | 4 | 5 |
| DC32, 33, 36, 37, 60, 61, 62, 63 | 2 | 3 | 4 | 5 | * |

* Consult TE for availability of larger sizes.
** Note: cable support clamp I.D. may effect the size of shrinkHOoP grommet selected.





Catalog 1654025
Revised 3-13

www.te.com

Dimensions are shown for reference purposes only. Specifications subject to change.

Dimensions are in millimeters unless otherwise specified.

USA: +1 800 522 6752
Asia Pacific: +86 0 400 820 6015
UK: +44 800 267 666

For additional support numbers please visit www.te.com

## Ordering Information

TE has acquired XL Technologies. Use the information in the following table to convert the XL part number into the new TE product description.

| Description XL Part No. | Convert to Description |
|---|---|
| 080EK025 | SSC-2/239 |
| 080EK025-woA | SSC-2/U |
| 137EK050 | SSC-3/239 |
| 137EK050-woA | SSC-3/U |
| 1-8117-2A | CES-2A-D1 |
| 1-8117-3A | CES-2A-T1 |
| 1-8117-4A | CES-2A-F1 |
| 200EK075 | SSC-4/239 |
| 200EK075-woA | SSC-4/U |
| 20432242 | CES-4/HR-3 |
| 2-8115-2A | CES-2-D1A |
| 2-8115-2AOE | CES-2-D1A |
| 2-8115-2B | CES-2-D1 |
| 2-8115-3A | CES-2-T1 |
| 2-8115-3B | CES-2-T1B |
| 2-8115-4A | CES-2-F1A |
| 2-8115-4B | CES-2-F1 |
| 2-8117-2A | CES-2A-D1 |
| 2-8117-2AOE | CES-2A-D1 |
| 2-8117-3A | CES-2A-T2 |
| 2-8117-4A | CES-2A-F2 |
| 2-8118-3A | CES-2-T1 |
| 2S-8115-2A | CES-2-D1A |
| 2S-8115-3A | CES-2-T1 |
| 2S-8115-4A | CES-2-F1A |
| 380EK150 | SSC-6/239 |
| 380EK150woA | SSC-6/U |
| 3-8115-2B | CES-3-D1 |
| 3-8115-3B | CES-3-T1 |
| 3-8115-4B | CES-3-F1 |
| 3-8118-4B | CES-3-F1 |
| 3A-8117-2B | CES-3A-D1 |
| 3A-8117-3B | CES-2A-T3 |
| 3A-8117-4B | CES-3A-F1 |
| 4-8115-2C | CES-4-D3 |
| 4-8115-3C | CES-4-T1 |
| 4-8115-4C | CES-4-F1 |
| 4-8117-2B | CES-3A-D2 |
| 4-8117-3B | CES-3A-T2 |
| 4-8117-4B | CES-3A-F2 |
| 4A-8117-2C | CES-4A-D3 |
| 4A-8117-3C | CES-4A-T3 |
| 4A-8117-4C | CES-4A-F3 |
| 52451-2X12A | 91385-2/12 |
| 5-8115-3D | CES-5-T4 |
| 8114-1 | CES-1 |
| 1/2/14 | CES-1-2 |
| 8114-1-49R | CES-1R |
| 8114-2 | CES-2 |
| 8114-2-50R | CES-2R |
| 8114-2S | CES-2 |
| 8114-3 | CES-3 |
| 8114-3-51R | CES-3R |
| 8114-3L | CES-3L |
| 8114-3S | CES-3S |
| 8114-4 | CES-4 |
| 8114-4-54R | CES-4R |
| 8114-4N | CES-4 |
| 8114-4S | CES-4S |
| 8114-4S/C | CES-4S |
| 8114-5 | CES-5 |

| Description XL Part No. | Convert to Description |
|---|---|
| 8116-1 | CES-2-A50 |
| 8116-1-49R | CES-2R-A50 |
| 8116-1A | CES-2-A50 |
| 8116-2 | CES-2-A75 |
| 8116-2-50R | CES-2R-A75 |
| 8116-3 | CES2-A100 |
| 8116-3-51R | CES-3R-A100 |
| 8116-3A | CES-3-A100 |
| 8116-4 | CES-3-A150 |
| 8116-4-52R | CES-3R-A150 |
| 8116-4A | CES-4-A150 |
| 8116-5 | CES-5-A250 |
| 8118-2 | CES-2 |
| 91342-1 | D3-9 FR |
| 91342-12 | D3-30 FR |
| 91342-2 | D14-30 FR |
| 91342-23 | D14-100 FR |
| 91342-3X2.5 | D50-200 FR |
| 91342-3 | D50-100 FR |
| 91342-34 | D50-400 FR |
| 91342-4 | D200-400 FR |
| 91343-1 | T3-9 FR |
| 91343-2 | T14-23 FR |
| 91343-2A | T14-50 FR |
| 91343-3 | T42-100 FR |
| 91343-4 | T150-300 FR |
| 91343-5 | T-400 FR |
| 91343-5678 | T3-100 FR |
| 91343-6 | T500-600 FR |
| 91343-910 | T150-400 FR |
| 91344-1 | F3-9 FR |
| 91344-1213 | F3-23 FR |
| 91344-1415 | F42-100 FR |
| 91344-1617 | F75-200 FR |
| 91344-2 | F-23 FR |
| 91344-3 | F42-60 FR |
| 91344-4 | F75-100 FR |
| 91344-5 | F133-200 FR |
| 91344-6 | F150-400 FR |
| 91346-3 | 6S100-200 FR |
| 91346-30 | 202A111-3-0 |
| 91346-31 | 202A111-3/42-0 |
| 91346-32 | 202A111-3/86-0 |
| 91347-30 | 202A121-3-0 |
| 91347-31 | 202A121-3/42-0 |
| 91347-32 | 202A121-3/86-0 |
| 91348-1 | 8S23-75 FR |
| 91348-2 | 8S14-50 FR |
| 91348-3 | 8S42-100 FR |
| 91348-30 | 202A132-3-0 |
| 91348-31 | 202A132-3/42-0 |
| 91348-32 | 202A132-3/86-0 |
| 91349-30 | 202A142-3-0 |
| 91349-31 | 202A142-3/42-0 |
| 91349-32 | 202A142-3/86-0 |
| 91350-30 | 202A153-3-0 |
| 91350-31 | 202A153-3/42-0 |
| 91350-32 | 202A153-3/86-0 |
| 91351-30 | 202A163-3-0 |
| 91351-31 | 202A163-3/42-0 |
| 91351-32 | 202A163-3/86-0 |



Dimensions are shown for reference purposes only. Specifications subject to change.

Dimensions are in millimeters unless otherwise specified.

USA: +1 800 522 6752
Asia Pacific: +86 0 400 820 6015
UK: +44 800 267 666

For additional support numbers please visit www.te.com

## Ordering Information (Continued)

| Description XL Part No. | Convert to Description |
|---|---|
| 91352-30 | 202A174-3-0 |
| 91352-31 | 202A174-3/42-0 |
| 91352-32 | 202A174-3/86-0 |
| 91353-30 | 202A185-3-0 |
| 91353-31 | 202A185-3/42-0 |
| 91353-32 | 202A185-3/86-0 |
| 91354-30 | 202A196-3-0 |
| 91354-31 | 202A196-3/42-0 |
| 91354-32 | 202A196-3/86-0 |
| 913L87-30 | 202D921-3/-0 |
| 913L87-31 | 202D921-3/42-0 |
| 913L87-32 | 202D921-3/86-0 |
| 91387-30 | 202A921-3/-0 |
| 91387-31 | 202A921-3/42-0 |
| 913L47-30 | 202D121-3/-0 |
| 913L47-31 | 202D121-3/42-0 |
| 913L47-32 | 202D121-3/86-0 |
| 913L48-30 | 202D132-3/-0 |
| 913L48-31 | 202D132-3/42-0 |
| 913L48-32 | 202132-3/-86-0 |
| 913L49-30 | 202D142-3/-0 |
| 913L49-31 | 202D142-3/42-0 |
| 913L49-32 | 202D142-3/86-0 |
| 913L50-30 | 202D153-3-0 |
| 913L50-31 | 202D153-3/42-0 |
| 913L50-32 | 202D153-3/86-0 |
| 913L51-30 | 202D163-3-0 |
| 913L51-31 | 202D163-3/42-0 |
| 913L51-32 | 202D163-3/86-0 |
| 913L52-30 | 202D174-3-0 |
| 913L52-31 | 202D174-3/42-0 |
| 913L52-32 | 202D174-3/86-0 |
| 913L53-30 | 202D185-3-0 |
| 913L53-31 | 202D185-3/42-0 |
| 913L53-32 | 202D185-3/86-0 |
| 913L54-30 | 202D196-3-0 |
| 913L54-31 | 202D196-3/42-0 |
| 913L54-32 | 202D196-3/86-0 |
| 913L66-30 | 202D211-3-0 |
| 913L66-31 | 202D211-3/42-0 |
| 913L66-32 | 202D211-3/86-0 |
| 913L67-30 | 202D221-3-0 |
| 913L67-31 | 202D221-3/42-0 |
| 913L67-32 | 202D221-3/86-0 |
| 913L68-30 | 202D232-3-0 |
| 913L68-31 | 202D232-3/42-0 |
| 913L68-32 | 202D232-3/86-0 |
| 913L69-30 | 202D242-3-0 |
| 913L69-31 | 202D242-3/42-0 |
| 913L69-32 | 202D242-3/86-0 |
| 913L70-30 | 202D253-3-0 |
| 913L70-31 | 202D253-3/42-0 |
| 913L70-32 | 202D253-3/86-0 |
| 913L87-30 | 202D921-3-0 |
| 913L87-31 | 202D921-3/42-0 |
| 913L87-32 | 202D921-3/86-0 |
| 913R48-30 | 222A132-3-0 |
| 913R48-31 | 222A132-3/42-0 |
| 913R48-32 | 222A132-3/86-0 |
| 913R49-30 | 222A142-3-0 |

| Description XL Part No. | Convert to Description |
|---|---|
| 913R49-31 | 222A142-3/42-0 |
| 913R49-32 | 222A142-3/86-0 |
| 913R50-30 | 222A152-3-0 |
| 913R50-31 | 222A152-3/42-0 |
| 913R50-32 | 222A152-3/86-0 |
| 913R51-30 | 222A163-3-0 |
| 913R51-31 | 222A163-3/42-0 |
| 913R51-32 | 222A163-3/86-0 |
| 913R52-30 | 222A174-3-0 |
| 913R52-31 | 222A174-3/42-0 |
| 913R52-32 | 222A174-3/86-0 |
| 913RL48-30 | 222D132-3-0 |
| 913RL48-31 | 222D132-3/42-0 |
| 913RL48-32 | 222D132-3/86-0 |
| 913RL49-30 | 222D142-3-0 |
| 913RL49-31 | 222D142-3/42-0 |
| 913RL49-32 | 222D142-3/86-0 |
| 913RL50-30 | 222D152-3-0 |
| 913RL50-31 | 222D152-3/42-0 |
| 913RL50-32 | 222D152-3/86-0 |
| 913RL51-30 | 222D163-3-0 |
| 913RL51-31 | 222D163-3/42-0 |
| 913RL51-32 | 222D163-3/86-0 |
| 913RL52-30 | 222D174-3-0 |
| 913RL52-31 | 222D174-3/42-0 |
| 913RL52-32 | 222D174-3/86-0 |
| 913Y95-30 | 381A301-71/-0 |
| 913Y95-31 | 381A301-71/42-0 |
| 913Y95-32 | 381A301-71/86-0 |
| 913Y96-30 | 381A302-71/-0 |
| 913Y96-31 | 381A302-71/42-0 |
| 913Y96-32 | 381A302-71/86-0 |
| HHW-1.3/6A | SST-6-13FR/97-0 |
| HHW-13/6A | SST-6-13FR/97-0 |
| HHW-15/12 | SST-12-15FR/97-0 |
| HHW-15/6 | SST-6-15FR/97-0 |
| HHW-15/9 | SST-9-15FR/97-0 |
| HHW-20/9 | SST-9-20FR/97-0 |
| HRSR-1 | URHR-1 |
| HRSR-2 | URHR-2 |
| HRSR-3 | URHR-3 |
| HRSR-4 | URHR-4 |
| HRSR-5 | URHR-5 |
| XHTA | RHW |
| XHTU | RHW |
| XMTA | RPRD |







Dimensions are shown for reference purposes only. Specifications subject to change.

Dimensions are in millimeters unless otherwise specified.

USA: +1 800 522 6752
Asia Pacific: +86 0 400 820 6015
UK: +44 800 267 666

For additional support numbers please visit www.te.com

## Sigmaform Product Dimensions

**Conversion Table** mm (in)

| Commercial Description | Military Description | Number of Legs | I.D. base Minimum Expanded | I.D. base Maximum Recovered* | I.D. legs Minimum Expanded | I.D. legs Maximum Recovered* | Leg Length Recovered* | Base Length Recovered* |
|---|---|---|---|---|---|---|---|---|
| 302V111 | SSB-1202 FR | 2 | 40.64 [1.60] | 11.43 [.45] | 13.97 [.55] | 3.81 [.15] | 36.83 [1.45] | 62.23 [2.45] |
| 302V163 | SSB-2002 FR | 2 | 50.80 [2.00] | 35.56 [1.40] | 19.05 [.75] | 8.89 [.35] | 69.85 [2.75] | 88.90 [3.50] |
| 402V101 | T3-9 FR | 3 | 22.86 [.90] | 9.14 [.36] | 8.38 [.33] | 2.29 [.09] | 19.05 [.75] | 50.80 [2.00] |
| 402V121 | T14-23 FR | 3 | 30.48 [1.20] | 17.78 [.70] | 12.70 [.50] | 4.57 [.18] | 25.40 [1.00] | 60.96 [2.40] |
| 402V142 | T42-100 FR | 3 | 43.18 [1.70] | 22.86 [.90] | 20.32 [.80] | 4.83 [.19] | 30.48 [1.25] | 57.15 [2.25] |
| 402V163 | T150-300 FR | 3 | 60.96 [2.40] | 35.56 [1.40] | 28.70 [1.13] | 12.70 [.50] | 69.85 [2.75] | 88.90 [3.50] |
| 402V185 | T-400 FR | 3 | 81.28 [3.20] | 50.80 [2.00] | 35.56 [1.40] | 17.78 [.70] | 73.15 [2.88] | 88.90 [3.50] |
| 402V196 | T500-600 FR | 3 | 124.46 [4.90] | 58.93 [2.32] | 50.80 [2.00] | 22.86 [.90] | 50.80 [2.00] | 187.96 [7.40] |
| 502V132 | F-23 FR | 4 | 31.75 [1.25] | 20.32 [.80] | 12.70 [.50] | 5.08 [.20] | 27.94 [1.10] | 63.50 [2.50] |
| 502V153 | F-42-60 FR | 4 | 44.45 [1.75] | 25.40 [1.00] | 20.92 [.80] | 8.13 [.32] | 30.48 [1.25] | 63.50 [2.50] |
| 502V163 | F133-200 FR | 4 | 67.31 [2.65] | 35.56 [1.40] | 30.48 [1.20] | 10.92 [.43] | 71.12 [2.80] | 91.44 [3.60] |
| 705V174 | 6S100-200 FR | 6 | 60.96 [2.40] | 36.83 [1.45] | 20.32 [.80] | 8.89 [.35] | 69.85 [2.75] | 86.36 [3.40] |

*After unrestricted recovery



Dimensions are shown for reference purposes only. Specifications subject to change.

Dimensions are in millimeters unless otherwise specified.

USA: +1 800 522 6752
Asia Pacific: +86 0 400 820 6015
UK: +44 800 267 666

For additional support numbers please visit www.te.com

## Table of Contents

**Selection Guide** . . . . . .5-1
Adhesive/Sealant Product Characteristics Table . . . . . .5-2, 5-3
Adhesive/Sealant Selection Table . . . . . .5-4
Raychem RT-555 High Temperature Heat Shrink Tape . . . . . .5-5, 5-6
**Installation Guide** . . . . . .5-7

TE manufacturers Raychem adhesives and sealants to accommodate a wide range of applications, materials, and environmental conditions. Raychem adhesives include both thermosets and thermoplastics. Thermosets are curable two-part epoxies or crosslinked elastomers. Thermoplastics are hot-melt adhesives that flow when heated and set when cooled. They reflow when reheated to simplify component repair. TE also manufactures Raychem products that include a thermoplastic adhesive or a mastic-type sealant for water holdout applications. The sealants adhere to nonoily substrates and can be removed where reentry is necessary



## Selection Guide

To determine the adhesive or sealant most compatible with a Raychem part, you must know the part's product type.

Use the Adhesive/Sealant Selection Table on page 5-4 to determine a Raychem part's product type and the adhesive/sealant compatible with that type.

Use the Adhesive/Sealant Product Characteristics Table (pages 14 and 15) to be sure the adhesive or sealant has the product characteristics your application requires.

To use the Selection Table, follow these four steps:

1. Under "Substrate Category," find the product material and product name/part number for the Raychem part.
2. Across the top of the table, find the part's product type and dash number.
3. At the intersection of the substrate category (product material/name/part number) and the product type (by designated dash number) you will find the part number for the most compatible adhesive for the Raychem part.
4. See the Adhesive/Sealant Product Characteristics Table to verify the characteristics of the adhesive/sealant you selected.

**Note:** Users should independently evaluate the suitability of the product for their application. Before ordering, check with TE for most current data..



Catalog 1654025
Revised 3-13

www.te.com

Dimensions are shown for reference purposes only. Specifications subject to change.

Dimensions are in millimeters unless otherwise specified.

USA: +1 800 522 6752
Asia Pacific: +86 0 400 820 6015
UK: +44 800 267 666

For additional support numbers please visit www.te.com

## Adhesive/Sealant Product Characteristics Tables

| Product Type | Precoat Designation | Type | Operating Temperature Range | Product Designation | Available Form/ Packaging |
|---|---|---|---|---|---|
| **Thermosets** | | | | | |
| S1006 | — | Epoxy/polyamide two-part paste | -55°C to 135°C [-67°F to 275°F] | S1006 Kit 8 | 50-ml dual syringe |
| | | | | S1006 Kit 1 | Two 15-gram packs |
| | | | | S1006 Kit 2 | Four 7.5-gram packs |
| | | | | S1006 Kit A | Ten 3-gram packs |
| S1009 | — | Epoxy/polymercaptan two-part paste | -55°C to 135°C [-67°F to 275°F] | S1009 Kit A | Ten 3-gram packs |
| | | | | S1009 Kit 8 | 50-ml dual syringe |
| S1255-04 | — | One-part epoxy tape adhesive | -55°C to 200°C [-67°F to 392°F] | S1255-04 | Tape [3/4 in. x .020 x 100 ft.] |
| S1125 | — | Epoxy/polyamide two-part paste | -55°C to 150°C [-67°F to 302°F] | S1125 Kit 1 | Five 10-gram packs |
| | | | | S1125 Kit 2 | Two 10-gram packs |
| | | | | S1125 Kit 3 | One 100-gram pack |
| | | | | S1125 Kit 4 | Five 10-gram packs |
| | | | | S1125 Kit 5 | One 10-gram pack |
| | | | | S1125 Kit 8 | 50-ml dual syringe |
| S1264 | — | Epoxy/polyamide two-part paste | -55°C to 150°C [-67°F to 302°F] | S1264 Kit 1 | One 10-gram pack |
| | | | | S1264 Kit 8 | 50-ml dual syringe |
| | /225 | Precoated latent-curing epoxy/polyamide | -75°C to 150°C [-103°F to 302°F] | Precoat only on -25 molded parts | — |
| **Thermoplastics** | | | | | |
| S1017 | /42 | Hot-melt/ polyamide | -20°C to 60°C*** [-4°F to 140°F] | S1017 | Tape [1 in. x .010 in. x 50 ft.] |
| S1030 | /180 | Hot-melt/ polyolefin | -80°C to 80°C [-112°F to 176°F] | S1030 | Tape [3/4 in. x .010 in. x 33 ft.] |
| S1048 | /86 | Hot-melt, high performance | -55°C to 120°C [-67°F to 248°F] | S1048 | Tape [1 in. x .026 in. x 100 ft.] |
| S1124 | /164 | Hot-melt/ elastomeric polymer | -55°C to 105°C [-67°F to 221°F] | S1124 | Tape [3/4 in. x .018 in.x 100 ft.] |
| S1297 | /97 | Hot-melt/ polyamide adhesive | -20°C to 90°C] [-4°F to 194°F] | S1297 | Tape [1 in. x .010 in. x 10 ft.] |
| **Sealants** | | | | | |
| S1278 | — | Hot-melt grey butyl sealant | -40°C to 90°C [-40°F to 194°F] | S1278-01 | Tape [1 in. x .062 in. x 25 ft.] |
| | | | | S1278-02 | Tape [3-3/4 in. x .125 in. x 10 ft.] |
| S1305 | — | Hot-melt grey butyl sealant, FR | -40°C to 90°C [-40°F to 194°F] | S1305-01 | Tape [1 in. x.062 in. x25 ft.] |

*Shelf life from date of manufacture.
**For specific adhesion properties, see product specification sheets.
***Passes cold bend at -40°C [-40°F] per RT-4204.
****Only S-1006 Kit A conforms to A-A-56031.

For full details on installation procedures and curing conditions, please refer to the applicable TE Code of Practice or installation document.



Dimensions are shown for reference purposes only. Specifications subject to change.

Dimensions are in millimeters unless otherwise specified.

USA: +1 800 522 6752
Asia Pacific: +86 0 400 820 6015
UK: +44 800 267 666

For additional support numbers please visit www.te.com

## Adhesive/Sealant Product Characteristics Tables (Continued)

| Product Type | Pot Life at 23°C [73.4°F] | Curing Conditions | Shelf life* at or below 25°C [77°F] | Specifications** | Comments |
|---|---|---|---|---|---|
| **Thermosets** | | | | | |
| S1006 | 1 hr | 96 hr at 20°C [68°F] min. or 1 hr at 120°C [248°F] | 2 years 1 year Kit 8 | RT-1006 RK-6612 A-A-56031**** | General purpose harnessing adhesive. Not used on fluoroelastomers, silicone or PVDF |
| S1009 | 20 min. | 24 hr at 20°C [68°F] min. or 1 hr at 95°C [203°F] 45 min at 120°C [248°F] | 2 years 1 year Kit 8 | RT-1009 | General purpose harnessing adhesive. Not used on fluoroelastomers or silicone. |
| S1255-04 | — | 90 min at 155°C [311°F] or 15 min at 26 0°C [464°F] | 1 year with refrigeration | RT-1014 | One-part epoxy tape used with fluoroelastomer harness systems. |
| S1125 | — | 24 hr at 20°C min. or 1 hr at 85°C [185°F] | 18 months | RT-1011 RK-6619 VG-95343 | Good fluid-resistant epoxy used with System 25 |
| S1264 | 90 min. | 24 hr at 20°C min. or 1 hr at 85°C [185°F] | 18 months | RT-1012 | Tested to NBC requirements |
| /225 | — | Cure during installation of molded parts | 36 months | VG-95343 RK-6630 | Precoated epoxy system System 25 |
| **Thermoplastics** | | | | | |
| S1017 | — | 120°C [248°F] | Unlimited | RT-1050/1 | General purpose harnessing adhesive Standard precoated adhesive for -3 and -4 molded parts |
| S1030 | — | 120°C [248°F] | Unlimited | RT-1050/6 RK-6017 | Good low-temperature flexibility Available as a preinstalled tape for molded parts |
| S1048 | — | 160°C [320°F] | Unlimited | RT-1050/3 RK-6626 | Requires high temperature to achieve bonding. Highest service temperature for hot melt |
| S1124 | — | 150°C [302°F] | Unlimited | RT-1050/13 | Requires reflowing in an oven at 150°C [302°F] for 90 minutes. Designed to bond to -51 molded parts. |
| S1297 | — | 120°C [248°F] | Unlimited | RW-2019 | General purpose harnessing adhesive Standard precoated adhesive in Sigmaform molded parts, CES and CSGA cable entry seals, and SST-FR heat-shrinkable tubing |
| **Sealants** | | | | | |
| S1278 | — | 110°C [230°F] | Unlimited | RW-2020 | General purpose sealant and cable breakout area filler |
| S1305 | — | 110°C [230°F] | Unlimited | RW-2020 | Halogen-free, flame-retardant sealant and cable breakout area filler |

*Shelf life from date of manufacture.
**For specific adhesion properties, see product specification sheets.
***Passes cold bend at -40°C [-40°F] per RT-4204.
****Only S-1006 Kit A conforms to A-A-56031.

For full details on installation procedures and curing conditions, please refer to the applicable TE Code of Practice or installation document.





Catalog 1654025
Revised 3-13

www.te.com

Dimensions are shown for reference purposes only. Specifications subject to change.

Dimensions are in millimeters unless otherwise specified.

USA: +1 800 522 6752
Asia Pacific: +86 0 400 820 6015
UK: +44 800 267 666

For additional support numbers please visit www.te.com

## Adhesive/Sealant Selection Table

| Substrate Category | Product Name Examples | Molded Part Material Dash Number | | | | | | | | | | | | |
|---|---|---|---|---|---|---|---|---|---|---|---|---|---|---|
| | | -3 | -4 | -6 | -8 | -12 | -25 | -50 | -51 | -55 | -71 | -100 | -125 | -130 |
| Polyolefin | RNF-100 | S1006 | S1006 | — | — | — | — | — | — | — | S1006 | — | — | S1006 |
| | Versafit | S1009 | S1009 | — | — | — | — | — | — | — | S1009 | — | — | S1009 |
| | CRN | S1017 | S1017 | — | — | — | — | — | — | — | S1017 | — | — | S1017 |
| | BSTS | S1030 | S1030 | — | — | — | — | — | — | — | S1030 | — | — | — |
| | SST | S1048 | S1048 | — | — | — | — | — | — | — | S1048 | — | — | — |
| | HR | S1297 | S1297 | — | — | — | — | — | — | — | S1297 | — | — | — |
| Fluoro-polymer | PVDF | S1009 | S1009 | — | S1009 | — | S1125 | — | — | — | S1009 | — | S1009 | — |
| | | S1048 | S1048 | — | — | — | — | — | — | — | S1048 | — | S1048 | — |
| | | S1125 | S1125 | — | — | — | — | — | — | — | S1125 | — | S1125 | — |
| | RT-555 | — | — | — | — | S1255-04 | — | — | — | S1255-04 | — | — | S1255-04 | — |
| | HCTE | — | — | — | — | S1255-04 | S1125 | — | — | S1255-04 | — | — | — | — |
| | CONVOLEX | — | — | — | — | S1125 | — | — | — | S1125 | — | — | — | — |
| Vinyl | PVC | S1006 | S1006 | — | — | — | — | — | — | — | S1006 | — | — | — |
| | | S1009 | S1009 | — | — | — | — | — | — | — | S1009 | — | — | — |
| | | S1017 | S1017 | — | — | — | — | — | — | — | S1017 | — | — | — |
| Elastomer | DR-25 | — | — | — | — | — | S1125 | S1125 | S1125 | — | — | — | — | — |
| | NT | S1006 | S1006 | — | — | — | — | — | S1124 | — | S1006 | — | — | — |
| | | S1009 | S1009 | — | — | — | — | — | — | — | S1009 | — | — | — |
| | | S1017 | S1017 | — | — | — | — | — | — | — | S1017 | — | — | — |
| | NT-FR | — | — | — | — | — | S1125 | — | S1124 | — | — | — | — | — |
| | SFR | — | — | * | — | — | — | — | — | — | — | — | — | — |
| | SRFR | — | — | * | — | — | — | — | — | — | — | — | — | — |
| | RW-200 | — | — | — | — | S1255-04 | — | — | — | S1255-04 | — | — | S1255-04 | — |
| | VPB | — | — | — | — | — | — | S1125 | — | — | — | — | — | — |
| | | — | — | — | — | — | — | S1255-04 | — | — | — | — | — | — |
| Zerohal | XFFR | — | — | — | — | — | — | — | — | — | — | S1030 | — | — |
| | ZHTM | — | — | — | — | — | — | — | — | — | — | S1030 | — | — |

| Substrate Category | Product Name Examples | Molded Part Material Dash Number | | |
|---|---|---|---|---|
| | | -770 | -780 | -790 |
| Nuclear Fluoropolymer | RT770 | S1264 | — | — |
| | RT780 | — | S1255-04 | — |
| | RT790 | — | — | S1255-04 |

*GE RTV 108 used with SFR SRFR and -6 (silicone) molded parts.



Catalog 1654025
Revised 3-13

www.te.com

Dimensions are shown for reference purposes only. Specifications subject to change.

Dimensions are in millimeters unless otherwise specified.

USA: +1 800 522 6752
Asia Pacific: +86 0 400 820 6015
UK: +44 800 267 666

For additional support numbers please visit www.te.com

## Raychem RT-555

### High Temperature Heat Shrink Tape

The high temperature heat shrink tape is a bi-layer, side-entry, heat-recoverable sealing product whose length will shrink a predetermined percentage upon the application of heat in excess of 220˚C (428˚F).

### Product Facts

- **Wrap around tape form Heat resistant to +200˚C**
- **Fluid resistant**
- **Seals up to 15 psi**
- **Peel strength of at least 10 lbs/in-width**
- **Recovers 35% minimum**
- **Convenient tape form accommodates sealing harnesses and connectors in the field**
- **4 widths available: 3/4”, 1”, 1 1/2” and 2”**
- **2 continuous lengths available: 25 and 50 feet**

### Applications

Commercial Aerospace, Military, Offshore Drilling, Down Hole Wire harness systems requiring high fluid and high temperature resistance

Repair tape for wire harness bundles

Repair of rock and debris damage on landing gear wiring

### Mechanical

Peel strength higher than 10 lbs/in-width

Pressure seal up to altitudes of 75000’ or 15 psi

### Materials

The adhesive layer is a meltable fluoropolymer that will melt at the predetermined temperature lower than the recovery temperature of the tape backing.

Heat recoverable tape backing is made from high temperature crosslinked ETFE

### Standards and Specs

TE Specification: RT-1381

Application Specification: TUS-41-3032 (Installation Guide)

### Application Tooling

Raychem CV-1983 ThermoGun hot-air heating tool with TG-23, TG-24 reflectors

AD-1962 nozzle

### Physical or Other Properties

Provided in side-entry heat-shrinkable tape form

The tape is suitable for use in wire harness systems requiring aggressive fluid and high temperature resistance.





Catalog 1654025
Revised 3-13

www.te.com

Dimensions are shown for reference purposes only. Specifications subject to change.

Dimensions are in millimeters unless otherwise specified.

USA: +1 800 522 6752
Asia Pacific: +86 0 400 820 6015
UK: +44 800 267 666

For additional support numbers please visit www.te.com

## Raychem RT-555 (Continued)

### Product Dimensions and Ordering Information

### Product Offering

| Part Number | Package Type | Package Quantity |
|---|---|---|
| RT-555-T.75-A260-25 | tape | 25 feet |
| RT-555-T.75-A260-50 | tape | 50 feet |
| RT-555-T1.0-A260-25 | tape | 25 feet |
| RT-555-T1.0-A260-50 | tape | 50 feet |
| RT-555-T1.5-A260-25 | tape | 25 feet |
| RT-555-T1.5-A260-50 | tape | 50 feet |
| RT-555-T2.0-A260-25 | tape | 25 feet |
| RT-555-T2.0-A260-50 | tape | 50 feet |

| TABLE OF DIMENSIONS | | | |
|---|---|---|---|
| PART DESCRIPTION | W | LENGTH FEET(MIN) | T |
| RT–555–T.75–A260–XX | .75 [18.75] | 25,50 | .016 [.41] |
| RT–555–T1.0–A260–XX | 1.0 [25] | 25,50 | .016 [.41] |
| RT–555–T1.5–A260–XX | 1.5 [38] | 25,50 | .016 [.41] |
| RT–555–T2.0–A260–XX | 2.0 [51] | 25,50 | .016 [.41] |

Dimensions in inches [mm]

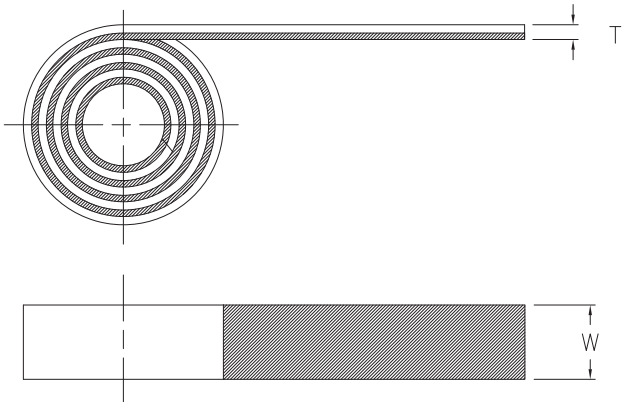




Dimensions are shown for reference purposes only. Specifications subject to change.

Dimensions are in millimeters unless otherwise specified.

USA: +1 800 522 6752
Asia Pacific: +86 0 400 820 6015
UK: +44 800 267 666

For additional support numbers please visit www.te.com

## Installation Guide

### installation Procedures

Preparation of the substrate depends on the part to be bonded.

Following are two preparation procedures. The first applies to plated metals and adapters; the second applies to polymer molded parts, cable jackets, and tubing materials.

#### Bonding between molded parts, plated metals and adapters

To ensure the best possible bond between a molded part and plated materials and adapters, degrease the end of the molded part which will recover onto the plated metal or adaptor with isopropyl alcohol or isopropanol (IPA) impregnated tissue wipe. NEVER abrade plated metals and adapters.

Where preheating of the plated metal or adapter is judged to be necessary for large and high heat sink terminations, care must be taken to ensure the connector insulation and primary wire insulation are not damaged. Ensure heat is directed to the metal area and all other areas are avoided. TE cannot be held responsible for damage caused during the preheating of plated metals or adapters.

#### Bonding between molded parts, cable jackets and tubing materials

To ensure the best possible bond between the molded part, cable jacket or tubing degrease the cable jacket in the area where the molded part will recover onto the cable using Isopropyl alcohol. (Approximately 30 mm). Abrade the cable jacket thoroughly in the same area with 100 grit emery cloth. The whole surface of the cable jacket should be abraded removing any print on the cable jacket. Remove loose particles from the abraded area using a dry tissue. DO NOT use a solvent wipe.

Ensure sufficient cable jacket has been abraded to incorporate the strip length requirement. Degrease the inner area of the molded part at each end thoroughly (Approximately 30mm) using Isopropyl alcohol. Abrade the inner area of the molded part at each end thoroughly (Approximately 30mm) with 100 grit emery cloth. Remove loose particles from the abraded area using a dry tissue. DO NOT use a solvent wipe.

#### Installation of heat shrink molded parts

For the installation of the wide range of TE heatshrink molded parts including straight, 45°, 90° and transitions refer to the appropriate Code of Practice Installation Procedures.

#### Installation of adhesives

For details of installation of the wide range of TE adhesives including epoxy, hot melt, tapes and pre-installed options refer to the appropriate Code of Practice Installation Procedures.

These Codes of Practice include information such as recommended tooling, installation temperatures, curing cycles and visual standards.

#### Heath and Safety

Adhere to local Codes and Regulations relating to Safe Working practices.

The installation should be carried out in a well ventilated area. Always wear heat resistant safety gloves when handling hot plastics and adhesives. The use of suitable protective gloves and barrier cream is recommended when using solvents.

Avoid prolonged repeated skin contact with solvents and always wash hands after using solvents. Care should be taken to wear safety glasses when using and handling chemical solvents. If eyes do become contaminated, flush with water and obtain medical assistance immediately. For specific handling precautions please consult appropriate TE material safety data sheet for adhesive being used.





Catalog 1654025
Revised 3-13

www.te.com

Dimensions are shown for reference purposes only. Specifications subject to change.

Dimensions are in millimeters unless otherwise specified.

USA: +1 800 522 6752
Asia Pacific: +86 0 400 820 6015
UK: +44 800 267 666

For additional support numbers please visit www.te.com

## Engineering Notes



Catalog 1654025
Revised 3-13

www.te.com

Dimensions are shown for reference purposes only. Specifications subject to change.

Dimensions are in millimeters unless otherwise specified.

USA: +1 800 522 6752
Asia Pacific: +86 0 400 820 6015
UK: +44 800 267 666

For additional support numbers please visit www.te.com

## Table of Contents

For high-performance sealing and strain relief, the perfect mate for a TE Connectivity molded part in a wiring application is a Raychem brand adapter.

TE offers a variety of adapters for applications in many industries, including aerospace, marine, and mass transit.

These adapters are:

- Available in many configurations to match applications
- Easy to install
- Ideal for high-reliability applications
- Kitted for customer convenience.

In this section we present Raychem brand spin-coupling adapters and Tinel-Lock adapters.

The Tinel-Lock adapter utilizes Raychem brand Tinel rings to terminate the overall shield to the adapter. The Tinel ring is a low-profile, high-strength, shape-memory-alloy shield-termination device available in many sizes to accommodate various entry sizes and shield configurations.

Tinel-Lock adapters are ideal for lightweight aerospace applications requiring repeated high-to-low temperature cycles.

**Note:** Users should independently evaluate the suitability of the product for their application. Before ordering, check with TE for most current data.


**Adapter Fundamentals**
Definitions . . . . . 6-2
Types of Adapters . . . . . 6-3, 6-4
Adapter Selection Process . . . . . 6-5

**Adapter Selection**
Adapter Code . . . . . 6-6 to 6-15
Adapter Family . . . . . 6-16
Part Number . . . . . 6-17, 6-18
Material and Finish . . . . . 6-19
Entry Size . . . . . 6-20 to 6-25
Tinel-Lock Ring . . . . . 6-26
CRES-Lock Bands/BND Adapters . . . . . 6-27

**Adapter Products**
Code 18 MIL-C-5015 (MS3100)
Braided Adapters . . . . . 6-28, 6-29
Solid Adapters . . . . . 6-30, 6-31
Spin-Coupling Adapters . . . . . 6-32, 6-33
Tinel-Lock Adapters . . . . . 6-34 to 6-36
Code 21 MIL-C-26482 Series 1
Braided Adapters . . . . . 6-37
Solid Adapters . . . . . 6-38
Spin-Coupling Adapters . . . . . 6-39
Tinel-Lock Adapters . . . . . 6-40, 6-41
CRES-Lock Adapters/BND Adapters . . . . . 6-42, 6-43
Code 32 MIL-C-22992
Braided Adapters . . . . . 6-44, 6-45
Spin-Coupling Adapters . . . . . 6-46
Tinel-Lock Adapters . . . . . 6-47
CRES-Lock Adapters/BND Adapters . . . . . 6-48, 6-49
Code 40 MIL-C-38999 Series III and IV
Braided Adapters . . . . . 6-50, 6-51
Solid Adapters . . . . . 6-52
Spin-Coupling Adapters . . . . . 6-53
Tinel-Lock Adapters . . . . . 6-54, 6-55
CRES-Lock Adapters/BND Adapters . . . . . 6-56, 6-57
Code 41 MIL-C-38999 Series I and II
Braided Adapters . . . . . 6-58, 6-59
Solid Adapters . . . . . 6-60
Spin-Coupling Adapters . . . . . 6-61
Tinel-Lock Adapters . . . . . 6-62, 6-63
CRES-Lock Adapters/BND Adapters . . . . . 6-64, 6-65
Code 54 MIL-C-5015 (MS3400), MIL-C-26482 Series 2, MIL-C-83723 Series I and III, MIL C-81703 Series III
Braided Adapters . . . . . 6-66, 6-67
Solid Adapters . . . . . 6-68
Spin-Coupling Adapters . . . . . 6-69
Tinel-Lock Adapters . . . . . 6-70, 6-71
CRES-Lock Adapters/BND Adapters . . . . . 6-72, 6-73
Code 76 BS 9522 F0017 (Pattern 105)
Spin-Coupling Adapters . . . . . 6-74
Tinel-Lock Adapters . . . . . 6-75, 6-76
Raychem FlexiScreen Backshells . . . . . 6-77, 6-78
HexaShield High-Performance EMC/EMI Adapters . . . . . 6-79 to 6-84
Raychem Spin Lock Variable Angle Backshell . . . . . 6-85, 6-86






Catalog 1654025
Revised 3-13

www.te.com

Dimensions are shown for reference purposes only. Specifications subject to change.

Dimensions are in millimeters unless otherwise specified.

USA: +1 800 522 6752
Asia Pacific: +86 0 400 820 6015
UK: +44 800 267 666

For additional support numbers please visit www.te.com

## Definitions

### Introduction

For high-performance sealing and strain relief, the perfect mate for a TE molded part in a wiring application is a Raychem brand adapter.

TE offers a variety of Raychem brand adapters for applications in many industries, including aerospace, marine, and mass transit.

These adapters are:

- Available in many configurations to match applications
- Easy to install
- Ideal for high-reliability applications
- Kitted for customer convenience.

In this section we present Raychem brand spin-coupling adapters and Tinel-Lock adapters.

The Tinel-Lock adapter utilizes TE Tinel ring to terminate the overall shield to the adapter. The Tinel ring is a low-profile, high-strength, shape-memory-alloy shield-termination device available in many sizes to accommodate various entry sizes and shield configurations.

Tinel-Lock adapters are ideal for lightweight aerospace applications requiring repeated high-to-low temperature cycles.

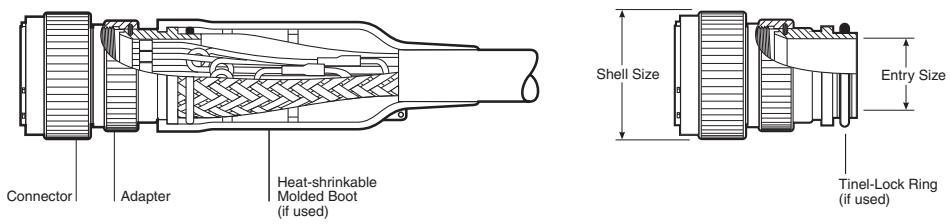


### Adapter Type

TE offers four adapter types: solid (sometimes called “fixed”), spin-coupling, braided, and Tinel-Lock. Each is designed to offer a suitable interface between a connector and a heat-shrinkable molded part.

### Adapter Code

A numerical code is used to identify connectors with similar adapter interfaces. This code is used to determine the adapter family and part number.

### Adapter Part Number

The part number is the sequence of numbers and letters that describes the adapter family (or series), size, material, finish, and modifications. The part numbering system is explained on pages 6-17 and 6-18.

### Adapter Family

TE offers several families (or series) of Raychem adapter products. Each Raychem adapter part number begins with an alphanumeric prefix denoting the Raychem product family.

### Entry Size

Entry size is the diameter of the hole through which the cable enters into the adapter. For example, the 08 entry is 12.7 [0.5]. Entry sizes are specified on braided and Tinel-Lock adapters only.

### Ring Designator

This is a two-letter code that is part of each Tinel-Lock adapter part number. It specifies the size of the Tinel-Lock ring suited to specific types of cable braid.

### Shell Size

This is the size of a connector as specified by the connector manufacturer. It is normally a two-digit number between 08 and 24, although certain connectors are obtainable in either larger or smaller sizes and some use letter codes.

### Order Number

This is a two-digit number that specifies the size of the adapter that will mate to the corresponding shell size of a connector. The order number is frequently the same as the connector shell size, but should be checked by reference to the appropriate product page(s) in this catalog.



Dimensions are shown for reference purposes only. Specifications subject to change.

Dimensions are in millimeters unless otherwise specified.

USA: +1 800 522 6752
Asia Pacific: +86 0 400 820 6015
UK: +44 800 267 666

For additional support numbers please visit www.te.com

## Types of Adapters

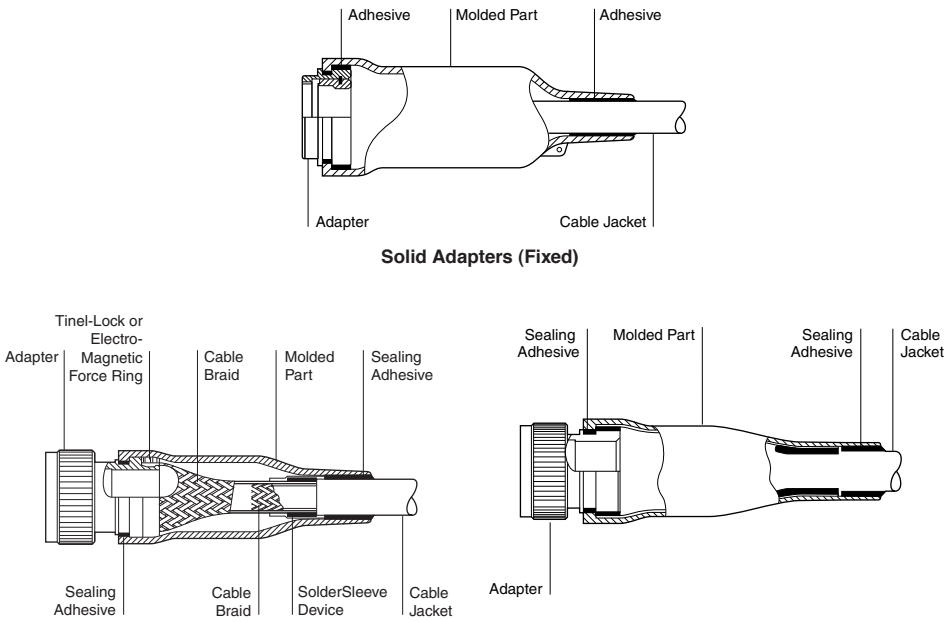


### Adapter Types

TE offers several types of Raychem brand adapters for unscreened and screened termination systems. The choice is largely dependent upon the screening level required and the braid termination method.

The four principal adapter types are:

- Solid (fixed)
- Spin-Coupling
- Braided
- Tinel-Lock

### Solid Adapters (Fixed)

Solid adapters are designed for use where no access is required; for example, when potting is necessary or a lower space profile is needed.

These adapters have a boot groove to accommodate a lipped heat-shrinkable boot. Repair cannot be made without removing the boot.

### Spin-Coupling Adapters

Spin-coupling adapters are two-part components that have a rotatable coupling nut and a grooved body designed to accommodate lipped-type heat-shrinkable boots.

Spin-couplings with an appropriate molded part are used for environmental protection and strain relief of unscreened cable terminations. Cable repairs can be made without damaging the boot.

### Braided Adapters

These are spin-coupling adapters that have a short length of tubular braided shield attached to the rear of the adapter. The braid is constructed from tinned copper wire and has a handling characteristic that enables it to be pulled down onto a wide range of cable diameters. This allows a standard entry size to be used with most cable sizes.

The shield is terminated to the cable braid using a SolderSleeve device, which provides screen continuity through to the connector. Straight, 45°, and 90° configurations are available.





Catalog 1654025
Revised 3-13

www.te.com

Dimensions are shown for reference purposes only. Specifications subject to change.

Dimensions are in millimeters unless otherwise specified.

USA: +1 800 522 6752
Asia Pacific: +86 0 400 820 6015
UK: +44 800 267 666

For additional support numbers please visit www.te.com

## Types of Adapters (Continued)

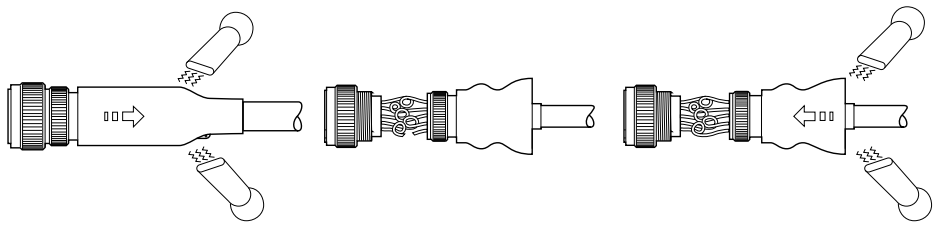

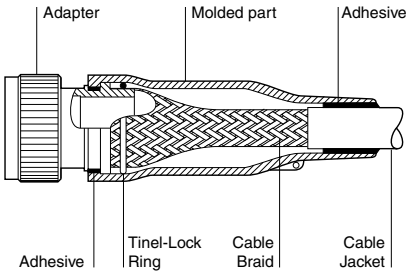


**Tinel-Lock Adapters**

### Tinel-Lock Adapters

This termination system consists of a modified spin-coupling adapter with a Tinel-Lock ring. The Tinel-Lock ring is made from a special shape memory metal that shrinks uniformly when heated (see Application Tooling, section 10).

The Tinel-Lock ring is used to terminate copper cable braid directly onto the rear of the adapter. The adapter entry size and ring designator must be selected to suit the cable diameter and braid type.

The resulting 360° termination withstands severe shock, vibration, temperature cycling, and corrosion. Straight, 45°, and 90° configurations are available.

### Roll-back Repair with Adapters

More than 85 percent of cable repairs are made within 75 mm [3.0] of the connectors—usually because of a broken pin or wire. By reheating the heat-shrinkable boot and unscrewing the adapter coupling nut, the boot can be “rolled back,” providing access to the rear of the connector for repair. This technique is applicable to spin-coupling, shielded, and Tinel-Lock adapters.



Dimensions are shown for reference purposes only. Specifications subject to change.

Dimensions are in millimeters unless otherwise specified.

USA: +1 800 522 6752
Asia Pacific: +86 0 400 820 6015
UK: +44 800 267 666

For additional support numbers please visit www.te.com

## Adapter Selection Process

### Step-by-Step Selection Process

Selecting an adapter for your application involves a five-step process:

1. From the connector number, determine:
   - Order number (shell size)
   - Material
   - Plating
2. Decide what adapter type you need for the connector.
3. Determine the connector code for that adapter type. (Use Table A, B, or C on pages 6-6 to 6-15).
4. Determine the adapter family for that connector code. (Use Table D on page 6-16).
5. Build the adapter part number. (See page 6-17).

The chart below will lead you through these steps.

### Adapter Selection Flowchart

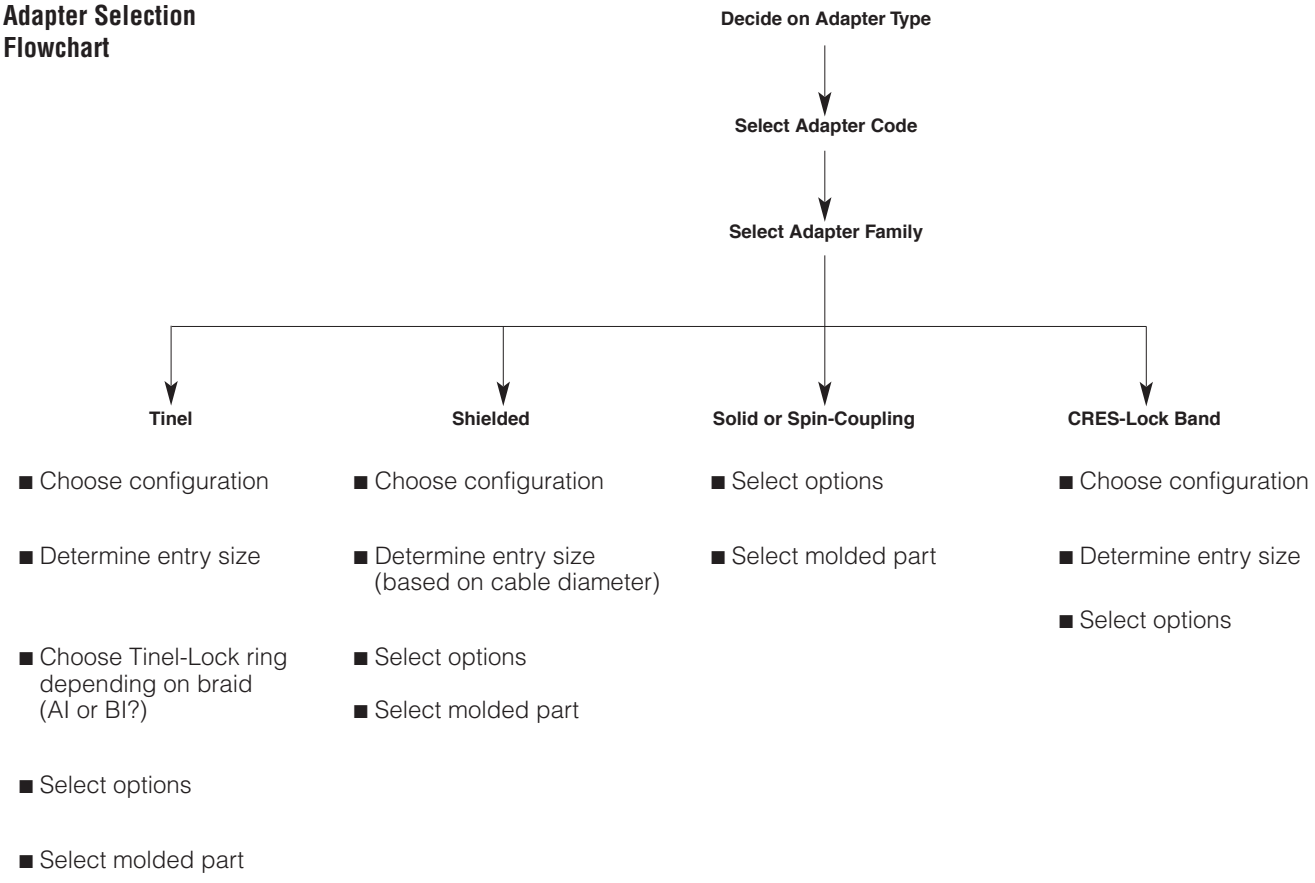






Catalog 1654025
Revised 3-13

www.te.com

Dimensions are shown for reference purposes only. Specifications subject to change.

Dimensions are in millimeters unless otherwise specified.

USA: +1 800 522 6752
Asia Pacific: +86 0 400 820 6015
UK: +44 800 267 666

For additional support numbers please visit www.te.com

## Adapter Code

### Table A. Adapter Code by Military Part Number

#### Selecting the Adapter Code

Tables A, B, and C that follow provide adapter codes for typical connectors.

If you know the military part number for the connector, you can obtain the adapter code from Table A that begins on this page.

If you know the manufacturer's prefix for the connector, you can obtain the adapter code from Table B that begins on page 6-10.

If you know the connector specification, you can obtain the adapter code from Table C on page 6-15

| Military Part No. | Connector Specification | Series/Class | Adapter Code |
|---|---|---|---|
| D38999/20 | MIL-C-38999 | Series III: Class C, F, K, W | 40 |
| D38999/24 | MIL-C-38999 | Series III: Class C, F, K, W | 40 |
| D38999/26 | MIL-C-38999 | Series III: Class C, F, K, W | 40 |
| D38999/40 | MIL-C-38999 | Series IV: Class C, F, W | 40 |
| D38999/42 | MIL-C-38999 | Series IV: Class C, F, W | 40 |
| D38999/44 | MIL-C-38999 | Series IV: Class C, F, W | Contact TE |
| D38999/46 | MIL-C-38999 | Series IV: Class F, W | 40 |
| D38999/47 | MIL-C-38999 | Series IV: Class C, W | 40 |
| M28840/10 | MIL-C-28840 | Class D, DS | 30 |
| M28840/11 | MIL-C-28840 | Class D, DS | 30 |
| M28840/14 | MIL-C-28840 | Class D, DS | 30 |
| M28840/16 | MIL-C-28840 | Class D, DS | 30 |
| M81511/01 | MIL-C-81511 | Series 2: Class A, E, F | 61 |
| M81511/03 | MIL-C-81511 | Series 2: Class A, E, F | 61 |
| M81511/05 | MIL-C-81511 | Series 2: Class A, E, F | 61 |
| M81511/06 | MIL-C-81511 | Series 2: Class A, E, F | 61 |
| M81511/21 | MIL-C-81511 | Series 1: Class A, E, F | 61 |
| M81511/23 | MIL-C-81511 | Series 1: Class A, E, F | 61 |
| M81511/25 | MIL-C-81511 | Series 1: Class A, E, F | 61 |
| M81511/26 | MIL-C-81511 | Series 1: Class A, E, F | 61 |
| M81511/31 | MIL-C-81511 | Series 2: Class C, P, T | 61 |
| M81511/32 | MIL-C-81511 | Series 2: Class C, P, T | 61 |
| M81511/33 | MIL-C-81511 | Series 2: Class C, P, T | 61 |
| M81511/34 | MIL-C-81511 | Series 2: Class C, P, T | 61 |
| M81511/35 | MIL-C-81511 | Series 1: Class C, P, T | 61 |
| M81511/36 | MIL-C-81511 | Series 1: Class C, P, T | 61 |
| M81511/37 | MIL-C-81511 | Series 1: Class C, P, T | 61 |
| M81511/38 | MIL-C-81511 | Series 1: Class C, P, T | 61 |
| M81511/41 | MIL-C-81511 | Series 3: Class A, E, F | 61 |
| M81511/45 | MIL-C-81511 | Series 3: Class A, E, F | 61 |
| M81511/46 | MIL-C-81511 | Series 3: Class A, E, F | 61 |
| M81511/49 | MIL-C-81511 | Series 3: Class A, E, F | 61 |
| M81511/51 | MIL-C-81511 | Series 4: Class A, E, F | 61 |
| M81511/53 | MIL-C-81511 | Series 4: Class A, E, F | 61 |
| M81511/55 | MIL-C-81511 | Series 4: Class A, E, F | 61 |
| M81511/56 | MIL-C-81511 | Series 4: Class A, E, F | 61 |
| M83723/01 | MIL-C-83723 | Series I: Class A, G, R | 54 |
| M83723/02 | MIL-C-83723 | Series I: Class A, G, R | 54 |
| M83723/03 | MIL-C-83723 | Series I: Class A, G, R | 54 |
| M83723/04 | MIL-C-83723 | Series I: Class A, G, R | 54 |
| M83723/05 | MIL-C-83723 | Series I: Class A, G, R | 54 |
| M83723/06 | MIL-C-83723 | Series I: Class A, G, R | 54 |
| M83723/07 | MIL-C-83723 | Series I: Class A, G, R | 54 |
| M83723/08 | MIL-C-83723 | Series I: Class A, G, R | 54 |
| M83723/13 | MIL-C-83723 | Series I: Class A, G, R | 54 |
| M83723/14 | MIL-C-83723 | Series I: Class A, G, R | 54 |
| M83723/17 | MIL-C-83723 | Series II: Class A, G, R | 19 |
| M83723/18 | MIL-C-83723 | Series II: Class A, G, R | 19 |
| M83723/19 | MIL-C-83723 | Series II: Class A, G, R | 19 |
| M83723/20 | MIL-C-83723 | Series II: Class A, G, R | 19 |
| M83723/23 | MIL-C-83723 | Series II: Class A, G, R | 19 |
| M83723/24 | MIL-C-83723 | Series II: Class A, G, R | 19 |
| M83723/27 | MIL-C-83723 | Series II, Class A, G, R | 19 |
| M83723/36 | MIL-C-83723 | Series I: Class A, G, R | 54 |
| M83723/37 | MIL-C-83723 | Series I: Class A, G, R | 54 |
| M83723/38 | MIL-C-83723 | Series I: Class A, G, R | 54 |
| M83723/39 | MIL-C-83723 | Series I: Class A, G, R | 54 |
| M83723/40 | MIL-C-83723 | Series I: Class A, G, R | 54 |
| M83723/41 | MIL-C-83723 | Series I: Class A, G, R | 54 |
| M83723/42 | MIL-C-83723 | Series I: Class G, R | 54 |
| M83723/43 | MIL-C-83723 | Series I: Class G, R | 54 |

## Adapter Code (Continued)

### Table A. Adapter Code by Military Part Number
(Continued)

| Military Part No. | Connector Specification | Series/Class | Adapter Code |
|---|---|---|---|
| M83723/48 | MIL-C-83723 | Series I: Class G, R | 54 |
| M83723/49 | MIL-C-83723 | Series I: Class G, R | 54 |
| M83723/52 | MIL-C-83723 | Series II: Class K | 19 |
| M83723/53 | MIL-C-83723 | Series II: Class K | 19 |
| M83723/65 | MIL-C-83723 | Series III: Class H | 54 |
| M83723/66 | MIL-C-83723 | Series III: Class A, G, R | 54 |
| M83723/67 | MIL-C-83723 | Series III: Class A, G, R | 54 |
| M83723/68 | MIL-C-83723 | Series III: Class A, G, R | 54 |
| M83723/69 | MIL-C-83723 | Series III: Class A, G, R | 54 |
| M83723/71 | MIL-C-83723 | Series III: Class A, G, R | 54 |
| M83723/72 | MIL-C-83723 | Series III: Class A, G, R | 54 |
| M83723/73 | MIL-C-83723 | Series III: Class A, G, R | 54 |
| M83723/74 | MIL-C-83723 | Series III: Class A, G, R | 54 |
| M83723/75 | MIL-C-83723 | Series III: Class A, G, R | 54 |
| M83723/76 | MIL-C-83723 | Series III: Class A, G, R | 54 |
| M83723/77 | MIL-C-83723 | Series III: Class G, R | 54 |
| M83723/78 | MIL-C-83723 | Series III: Class G, R | 54 |
| M83723/82 | MIL-C-83723 | Series III: Class A, G, K, R, S | 54 |
| M83723/83 | MIL-C-83723 | Series III: Class A, G, K, R, S | 54 |
| M83723/84 | MIL-C-83723 | Series III: Class A, G, K, R, S | 54 |
| M83723/85 | MIL-C-83723 | Series III: Class A, G, K, R, S | 54 |
| M83723/86 | MIL-C-83723 | Series III: Class A, G, K, R | 54 |
| M83723/87 | MIL-C-83723 | Series III: Class A, G, K, R | 54 |
| M83723/91 | MIL-C-83723 | Series III: Class G, R, W | 54 |
| M83723/92 | MIL-C-83723 | Series III: Class G, R, W | 54 |
| M83723/95 | MIL-C-83723 | Series III: Class A, G, K, R | 54 |
| M83723/96 | MIL-C-83723 | Series III: Class A, G, K, R | 54 |
| M83723/97 | MIL-C-83723 | Series III: Class S | 54 |
| M83723/98 | MIL-C-83723 | Series III: Class S | 54 |
| MS17343 | MIL-C-22992 | Class C, J, R | 32 |
| MS17344 | MIL-C-22992 | Class C, J, R | 32 |
| MS17345 | MIL-C-22992 | Class C, J, R | 32 |
| MS17346 | MIL-C-22992 | Class C, R | 32 |
| MS17347 | MIL-C-22992 | Class C, J, R | 32 |
| MS17348 | MIL-C-22992 | Class C, R | 32 |
| MS24264 | MIL-C-26500 (AL) | Class F, G, R<br>Type B&T aluminum shell | 51 |
| MS24264 | MIL-C-26500 (SST) | Class E<br>Type B&T stainless steel shell | 52 |
| MS24265 | MIL-C-26500 (AL) | Class F, G, R<br>Type B&T aluminum shell | 51 |
| MS24265 | MIL-C-26500 (SST) | Class E<br>Type B&T stainless steel shell | 52 |
| MS24266 | MIL-C-26500 (SST) | Class E<br>Type B&T stainless steel shell | 52 |
| MS24266 | MIL-C-26500 (AL) | Class F, G, R<br>Type B&T aluminum shell | 51 |
| MS27466 | MIL-C-38999 | Series I: Class E, P, T | 41 |
| MS27467 | MIL-C-38999 | Series I: Class E, P, T | 41 |
| MS27468 | MIL-C-38999 | Series I: Class E, P, T | 41 |
| MS27469 | MIL-C-38999 | Series I: Class Y | Contact TE |
| MS27472 | MIL-C-38999 | Series II: Class T | 41 |
| MS27473 | MIL-C-38999 | Series II: Class E, P, T | 41 |
| MS27474 | MIL-C-38999 | Series II: Class T | 41 |
| MS27475 | MIL-C-38999 | Series II: Class Y | Contact TE |
| MS27479 | MIL-C-38999 | Series II: Class T | 41 |
| MS27480 | MIL-C-38999 | Series II: Class E, T | 41 |
| MS27481 | MIL-C-38999 | Series II: Class T | 41 |
| MS27482 | MIL-C-38999 | Series II: Class Y | Contact TE |
| MS27484 | MIL-C-38999 | Series II: Class E, T | 41 |
| MS27497 | MIL-C-38999 | Series II: Class T | 41 |







Dimensions are shown for reference purposes only. Specifications subject to change.

Dimensions are in millimeters unless otherwise specified.

USA: +1 800 522 6752
Asia Pacific: +86 0 400 820 6015
UK: +44 800 267 666

For additional support numbers please visit www.te.com

## Adapter Code (Continued)

### Table A. Adapter Code by Military Part Number
(Continued)

| Military Part No. | Connector Specification | Series/Class | Adapter Code |
|---|---|---|---|
| MS27515 | MIL-C-38999 | Series I: Class E | Contact TE |
| MS27613 | MIL-C-26500 (SST) | Class K Type B&T stainless steel shell | 52 |
| MS27614 | MIL-C-26500 (SST) | Class K Type B&T stainless steel shell | 52 |
| MS27615 | MIL-C-26500 (SST) | Class K Type B&T stainless steel shell | 52 |
| MS27652 | MIL-C-38999 | Series I: Class E, T | 41 |
| MS27653 | MIL-C-38999 | Series I: Class E, T | 41 |
| MS27654 | MIL-C-38999 | Series I: Class E, T | Contact TE |
| MS27656 | MIL-C-38999 | Series I: Class E, T | 41 |
| MS27661 | MIL-C-38999 | Series I | 41 |
| MS27665 | MIL-C-38999 | Series I | 41 |
| MS3100 | MIL-C-5015 | Class A, E, F, R less endbell; solder contact | 18 |
| MS3101 | MIL-C-5015 | Class A, E, F, R less endbell; solder contact | 18 |
| MS3106 | MIL-C-5015 | Class A, E, F, R less endbell; solder contact | 18 |
| MS3107 | MIL-C-5015 | Class A, E, F, R less endbell; solder contact | 18 |
| MS3108 | MIL-C-5015 | Solder contact with endbell | 15 |
| MS3110 | MIL-C-26482 | Series 1: Class E, F, J, P | 21 |
| MS3111 | MIL-C-26482 | Series 1: Class E, F, J, P | 21 |
| MS3114 | MIL-C-26482 | Series 1: Class E, F, P | 24[1] |
| MS3116 | MIL-C-26482 | Series 1: Class E, F, J, P | 21 |
| MS3120 | MIL-C-26482 | Series 1: Class E, F, J, P | 21 |
| MS3121 | MIL-C-26482 | Series 1: Class E, F, J, P | 21 |
| MS3124 | MIL-C-26482 | Series 1: Class E, F, P | 24[1] |
| MS3126 | MIL-C-26482 | Series 1: Class E, F, J, P | 21 |
| MS3128 | MIL-C-26482 | Series 1: Class E, F, J, P | 21 |
| MS3130 | MIL-C-81703 | Series 1: Class E, P, J | 71 |
| MS3132 | MIL-C-81703 | Series 1: Class E | 71 |
| MS3134 | MIL-C-81703 | Series 1: Class E, P, J | 71 |
| MS3137 | MIL-C-81703 | Series 1: Class E, P, J | 71 |
| MS3138 | MIL-C-81703 | Series 1: Class E, P, J | 71 |
| MS3140 | MIL-C-81703 | Series 1: Class E, J | 71 |
| MS3144 | MIL-C-81703 | Series 1: Class E, J | 71 |
| MS3147 | MIL-C-81703 | Series 1: Class E, J | 71 |
| MS3148 | MIL-C-81703 | Series 1: Class E, J | 71 |
| MS3400 | MIL-C-5015 | Class D, L, U, W crimp contact | 54 |
| MS3401 | MIL-C-5015 | Class D, L, U, W crimp contact | 54 |
| MS3404 | MIL-C-5015 | Class D, L, U, W crimp contact | 54 |
| MS3406 | MIL-C-5015 | Class D, L, U, W crimp contact | 54 |
| MS3408 | MIL-C-5015 | Class D, L, U, W crimp contact | 54 |
| MS3409 | MIL-C-5015 | Crimp contact | 54 |
| MS3412 | MIL-C-5015 | Class D, L, U, W crimp contact less endbell | 54 |
| MS3424 | MIL-C-81703 | Series 3: Class E, L | 54 |
| MS3445 | MIL-C-81703 | Series 2: Class E | 71 |
| MS3446 | MIL-C-81703 | Series 3: Class E, L | 54 |
| MS3450 | MIL-C-5015 | Class D, L, U, W crimp contact | 54 |
| MS3451 | MIL-C-5015 | Class D, L, U, W crimp contact | 54 |
| MS3454 | MIL-C-5015 | Class D, L, U, W crimp contact | 54 |
| MS3456 | MIL-C-5015 | Class D, L, U, W crimp contact | 54 |
| MS3459 | MIL-C-5015 | Class L, W crimp contact | 54 |
| MS3464 | MIL-C-81703 | Series 3: Class E, L | 54 |
| MS3467 | MIL-C-81703 | Series 3: Class E, L | 54 |
| MS3468 | MIL-C-81703 | Series 3: Class E, L | 54 |
| MS3470 | MIL-C-26482 | Series 2: Class A, L | 54 |
| MS3471 | MIL-C-26482 | Series 2: Class A, L | 54 |
| MS3472 | MIL-C-26482 | Series 2: Class A, L | 54 |
| MS3474 | MIL-C-26482 | Series 2: Class A, L | 54 |
| MS3475 | MIL-C-26482 | Series 2: Class A, L | 54 |
| MS3476 | MIL-C-26482 | Series 2: Class A, L | 54 |
| NAS1599 | MIL-C-81703 | Series 3: | 54 |
| NAS1641 | MIL-C-81703 | Series 3: | 54 |
| NAS1642 | MIL-C-81703 | Series 3: | 54 |

[1]Code 24 connectors have an internal accessory thread.



Dimensions are shown for reference purposes only. Specifications subject to change.

Dimensions are in millimeters unless otherwise specified.

USA: +1 800 522 6752
Asia Pacific: +86 0 400 820 6015
UK: +44 800 267 666

For additional support numbers please visit www.te.com

## Adapter Code (Continued)

### Table A. Adapter Code by Military Part Number
(Continued)

| Military Part No. | Connector Specification | Series/Class | Adapter Code |
|---|---|---|---|
| NAS1643 | MIL-C-81703 | Series 3: | 54 |
| NAS1650 | MIL-C-81703 | Series 3: | 54 |
| NAS1651 | MIL-C-81703 | Series 3: | 54 |
| NAS1652 | MIL-C-81703 | Series 3: | 54 |
| NAS1653 | MIL-C-81703 | Series 3: | 54 |
| NAS1692 | MIL-C-81703 | Series 3: | 54 |
| NAS1693 | MIL-C-81703 | Series 3: | 54 |
| NAS1694 | MIL-C-81703 | Series 3: | 54 |
| NAS1699 | MIL-C-81703 | Series 3: | 54 |
| NAS1700 | MIL-C-81703 | Series 3: | 54 |
| NAS1701 | MIL-C-81703 | Series 3: | 54 |
| NAS1702 | MIL-C-81703 | Series 3: | 54 |





Catalog 1654025
Revised 3-13

www.te.com

Dimensions are shown for reference purposes only. Specifications subject to change.

Dimensions are in millimeters unless otherwise specified.

USA: +1 800 522 6752
Asia Pacific: +86 0 400 820 6015
UK: +44 800 267 666

For additional support numbers please visit www.te.com

## Adapter Code (Continued)

### Table B. Adapter Code by Manufacturer's Prefix

| Manufacturer's Prefix | Manufacturer[6] | Connector Specification | Series/Class | Adapter Code |
|---|---|---|---|---|
| 10-214 | Bendix | MIL-C-5015 | MS3100 Class A, E, R | 18 |
| 10-475 | Bendix | 40M38277 | — | 41 |
| 10-720 | Bendix | MIL-C-5015 | MS3100 Class A, E, R | 18 |
| 118 | Amphenol | MIL-C-26482 | Series 2 | 54 |
| 149 | Deutsch | MIL-C-81703 | Series 1 | 71 |
| 162GB | Amphenol | MIL-C-26482 | Series 1 | 76, 77[4] |
| 164GB | Amphenol | BS9522 F0023 | — | Contact TE |
| 165 | Amphenol | None | — | Contact TE |
| 172 | Amphenol | MIL-C-5015 | — | Contact TE |
| 179 | Amphenol | MIL-C-5015 | — | Contact TE |
| 182 | Amphenol | None | — | Contact TE |
| 246 | Amphenol | MIL-C-5015 | MS3100 Class E, F, R | 18 |
| 251 | Cannon | MIL-C-26482 | Series 1 | 21 |
| 2PPN | Plessey | MIL-C-26482 | Series 1 | 21 |
| 2PPN-07 | Plessey | MIL-C-26482 | Series 1 | 24[3] |
| 2PSN | Plessey | BS9522 F0017 | Patt 105 | 76, 77[4] |
| 2PSN-07 | Plessey | MIL-C-26482 | Series 1 | 24[3] |
| 348 | Amphenol | MIL-C-81511 | Series 1 and 2 | 61 |
| 381 | Deutsch | 40M39569 | — | 54 |
| 418 | Amphenol | MIL-C-38999 | Series I and II | 41 |
| 45/PT | Socapex | MIL-C-26482 | Series 1 | 21 |
| 450 | Deutsch | MIL-C-26482 | Series 1 | 21 |
| 451 | Socapex | PRL 54125 | — | 21 or 24[3] |
| 460 | Deutsch | MIL-C-26482 | Series 1 | 21 |
| 48 | Amphenol | MIL-C-26500 | Alum Class F, G, R | 51 |
| 486 | Amphenol | MIL-C-26482 | Series 2 | 54 |
| 518 | Amphenol | MIL-C-83723 | Series III | 54 |
| 5MS | FKI[2] | Def. Stan. 59-35 | Patt 121A | 75 |
| 602 | Amphenol | Def. Stan. 59-56 | Patt 602 | 54 |
| 602GB | Amphenol | Def. Stan. 59-56 | Patt 602 | 54 |
| 62AB-14 | Amphenol | MIL-C-26482 | Series 1 | Contact TE |
| 62GB | Amphenol | Def. Stan. 59-35 | Patt 105 | 76, 77[4] |
| 650 | Schaltbau | VG 95329 | — | 61 |
| 652 | Amphenol | LN 29504 | — | 54 |
| 652 | UMD | PRL 54125 | — | 21 or 24[3] |
| 674 | Schaltbau | VG 95328 | — | Contact TE |
| 675 | Schaltbau | VG 95328 | — | Contact TE |
| 679 | Schaltbau | VG 95329 | — | 61 |
| 69 | Amphenol | MIL-C-5015 | MS3100 Class E, F, R | 18 |
| 71 | Bendix | MIL-C-5015 | MS3100 Class A, E, R | 18 |
| 711 | Amphenol | BS9522 F0042 | — | 54 |
| 801 | Amphenol | None | — | 54 |
| 837 | Deutsch | MIL-C-83723 | Series III | 54 |
| 83723 | Souriau | MIL-C-83723 | Series III | 54 |
| 83730 | Deutsch | MIL-C-83723 | Series III | 54 |
| 845 | Souriau | NFL 54120 | — | Contact TE |
| 847 | Souriau | NFL 54120 | — | Contact TE |
| 850 | Souriau | MIL-C-26482 | Series 1 | 21 |
| 851 | Souriau | MIL-C-26482 | Series 1 | 21 |
| 8520 | Souriau | MIL-C-26482 | Series 2 | 54 |
| 8525 | Souriau | NAS 1599 | — | 54 |
| 8526 | Souriau | PAN 6432-1 | — | 54 |
| 853 | Souriau | MIL-C-83723 | Series III | 54 |
| 857 | Souriau | LN 29728 | — | 54 |
| 89 | Souriau | NFL 54140 | — | 54 |

[2]FKI was previously Thorn.
[3]Code 24 connectors have an internal accessory thread.
[4]Code 77 braided version.



Catalog 1654025
Revised 3-13

www.te.com

Dimensions are shown for reference purposes only. Specifications subject to change.

Dimensions are in millimeters unless otherwise specified.

USA: +1 800 522 6752
Asia Pacific: +86 0 400 820 6015
UK: +44 800 267 666

For additional support numbers please visit www.te.com

## Adapter Code (Continued)

### Table B. Adapter Code by Manufacturer's Prefix
(Continued)

| Manufacturer's Prefix | Manufacturer[6] | Connector Specification | Series/Class | Adapter Code |
|---|---|---|---|---|
| 891 | Souriau | MIL-C-5015 | Class K | Contact TE |
| 892 | Souriau | MIL-C-5015 | Class K | Contact TE |
| 8LT | Souriau | MIL-C-38999 | Series I | 41 |
| 8ST | Souriau | VG 96912 | Series 1 | 47 |
| 8T | Souriau | MIL-C-38999 | Series II | 41 |
| 9-815 | Deutsch | MIL-C-81511 | Series 3 and 4 | 61 |
| 91-483 | Bendix | MIL-C-26482 | Series 2 | 54 |
| 944 | Matrix | MIL-C-5015 | MS3400 Class L, U, W | 54 |
| 951 | Deutsch | LN 29500 | — | Contact TE |
| 97 | Amphenol | MIL-C-5015 | MS3100 Class A | 18 |
| 981 | Matrix | MIL-C-5015 | MS3400 | 54 |
| A815 | Deutsch | MIL-C-81511 | Series 3 | 61 |
| AA70 | Deutsch | Not known | — | 71 |
| AB05 | AB Elec | Def. Stan. 59-35 | Patt 105 | 76, 77[4] |
| AB06 | AB Elec | Def. Stan. 59-35 | Patt 105 | 76, 77[4] |
| ABB | AB Elec | BS9522 F0032 | — | 78 |
| ABJ | AB Elec | MIL-C-38999 | Series I and II | 41 |
| ADS | Deutsch | MIL-C-81703 | — | 71 |
| AFD | Deutsch | MIL-C-83723 | Series I | 54 |
| AFD5 | Deutsch | MIL-C-26482 | Series 2 | 54 |
| B815 | Deutsch | MIL-C-81511 | Series 4 | 61 |
| BE | Pyle | MIL-C-83723 | Series III | 54 |
| BG | Bendix | MIL-C-26482 | Series I | 21 |
| BL | G&H Tech | MIL-C-38999 | Series IV | 40 |
| BL | TRW | MIL-C-38999 | Series IV | 40 |
| BT | Burndy | MIL-C-26482 | Series 1 | 21 |
| BT | Pyle | MIL-C-83723 | Series III | 54 |
| BTK | Deutsch | MIL-C-26482 | Series 1 | 21 |
| BY1 | Pyle | MIL-C-83723 | Series III | 54 |
| C48 | TRW | MIL-C-26500 | Aluminum | 51 |
| CA (Bayonet) | Cannon | VG 95234 | — | 58 |
| CA3101 | Cannon | MIL-C-5015 | MS3100 class E, F, R | 18 |
| CA3101 | Cannon | MIL-C-5015 | MS3100 Class A | 18 |
| CA3101KE | Cannon | MIL-C-5015 | Class K | Contact TE |
| CA3106 | Cannon | MS3106A | — | 58 |
| CIR | VEAM | VG 95234 | — | 64***, 66**, 78* |
| CN0930 | TRW | MIL-C-83723 | Series III | 54 |
| CT | Burndy | MIL-C-38999 | Series II | 41 |
| CT | Plessey | MIL-C-38999 | Series II | 41 |
| CV-R | Cannon | MIL-C-83723 | Series II | 19 |
| CV34 | Cannon | MIL-C-5015 | MS3400 Class L, U, W | 54 |
| CVA | Cannon | MIL-C-83723 | Series II | 19 |
| CWL | Cannon | None | — | 31 |
| CWLD | Cannon | MIL-C-22992 | Class C, J, R | 32 |
| D817 | Deutsch | MIL-C-81703 | Series 3 | 54 |
| DA | Deutsch | None | — | 71 |
| DBAD | Deutsch | MIL-C-81703 | — | Contact TE |
| DBAS | Deutsch | MIL-C-81703 | Series 3 | 54 |
| DD | Deutsch | MIL-C-81703 | Series 2 | 71 |
| DFE | Deutsch | MIL-C-26482 | Series 2 | 54 |
| DKM | Deutsch | VG 95328 | — | Contact TE |
| DL | Deutsch | MIL-C-83723 | Series III | 54 |
| DM | Deutsch | MIL-C-81703 | Series 1 | 71 |
| DPX | Cannon | | — | Contact TE |
| DS | Deutsch | None | — | 71 |
| DTS | Deutsch | MIL-C-38999 | Series III | 40 |

* AB connectors only
** VEAM standard
***VEAM panel mount
[4]Code 77 braided version.







Dimensions are shown for reference purposes only. Specifications subject to change.

Dimensions are in millimeters unless otherwise specified.

USA: +1 800 522 6752
Asia Pacific: +86 0 400 820 6015
UK: +44 800 267 666

For additional support numbers please visit www.te.com

## Adapter Code (Continued)

### Table B. Adapter Code by Manufacturer's Prefix
(Continued)

| Manufacturer's Prefix | Manufacturer[6] | Connector Specification | Series/Class | Adapter Code |
|---|---|---|---|---|
| EA | Pyle | None | — | 54 |
| EB | Pyle | NAS 1599 | — | 54 |
| EEG | Pyle | MIL-C-83723 | Series I | 54 |
| ES | Pyle | None | — | 54 |
| ESC004 | Various | MIL-C-5015 | Class K | Contact TE |
| ET | Pyle | NAS 1599 | — | 54 |
| FC | Flight | MIL-C-5015 | Rev E only | Contact TE |
| FDBA | Deutsch | LN 29504 | — | 54 |
| FF | Flight | MIL-C-5015 | MS3400 Class D, L, U, W | 54 |
| FH | Flight | MIL-C-83723 | Series III | 54 |
| FPK | Pyle | MIL-C-26500 | Class K | 52 |
| FP5K | Pyle | MIL-C-26500 | Class K | Contact TE |
| FYL | Pyle | MIL-C-26500 | Class K | 52 |
| G | Burndy | None | — | 21 |
| GC-E | General | MIL-C-26482 | Series 1 | 21 |
| GTA | Hughes | MIL-C-28840 | — | 30 |
| GTC06 | Amphenol | — | — | 64 |
| HAN | Deutsch | MIL-C-5015 | MS3100 Class E, KE | Contact TE |
| HD | SAE | MIL-C-28840 | — | 30 |
| HTMAS | Cannon | MIL-C-5015 | Class K | Contact TE |
| HTMF | Cannon | MIL-C-83723 | Series III: Class K | 54 |
| HTMS | AB Elec | MVEE 695 | — | 75 |
| JT | Amphenol | MIL-C-38999 | Series II | 41 |
| JT | Bendix/FKI | MIL-C-38999 | Series II | 41 |
| JT | Socapex | MIL-C-38999 | Series II | 41 |
| JT-R | FKI[2] | PAN 6433-1 | — | 41 |
| JT-R | Teldix | PAN 6433-1 | — | 41 |
| KFS | Cannon | MIL-C-28840 | — | 30 |
| KJ | Cannon | MIL-C-38999 | Series II | 41 |
| KJA | Cannon | MIL-C-38999 | Series III | 40 |
| KJJ | Cannon | MIL-C-38999 | Series II | Contact TE |
| KJJL | Cannon | MIL-C-38999 | Series I | Contact TE |
| KJL | Cannon | MIL-C-38999 | Series I | 41 |
| KPSE | Cannon | MIL-C-26482 | Series 1 | 21 |
| KPT | Cannon | MIL-C-26482 | Series 1 | 21 |
| KV-R | Cannon | NAS 1599 | — | 54 |
| L | Burndy | MIL-C-26482 | Series 1 | 21 |
| LJT | Bendix | MIL-C-38999 | Series I | 41 |
| LJT | Socapex | MIL-C-38999 | Series I | 41 |
| LL3 | Deutsch | MIL-C-81511 | — | 61 |
| LL5/6 | Deutsch | BS9540 F0001 | Patt 602 | Contact TE |
| LMB | Litton-Veam | Def. Stan. 59-35 | Patt 121A | 75 |
| LPT | Deutsch | MIL-C-26482 | Series 1 | 21 |
| LS | Pyle | None | — | 54 |
| LTT | FKI[2] | BS9522 F0029 | Patt 616 | 41 |
| M-T | Burndy | MIL-C-26482 | Series 1 | 21 |
| M723 | Matrix | MIL-C-83723 | Series II | 19 |
| MB1 | Matrix | MIL-C-26482 | Series 2 | 54 |
| MB3 | Matrix | MIL-C-83723 | Series III | 54 |
| MB9 | Matrix | MIL-C-38999 | Series I and II | 41 |
| MD | Matrix | MIL-C-26482 | Series 2 | 54 |
| MDR | Deutsch | None | — | 71 |
| MF | Cannon | MIL-C-83723 | Series III | 54 |
| MK12 | Plessey | Def. Stan. 59-35 | Patt 603 | 76, 77[4] |
| MK18 | Plessey | Def. Stan. 59-35 | Patt 608 | 79[5] |
| MK38 | Plessey | MIL-C-38999 | Series I | 41 |

[2]FKI was previously Thorn.
[4]Code 77 braided version.
[5]Free connectors only.





Dimensions are shown for reference purposes only. Specifications subject to change.

Dimensions are in millimeters unless otherwise specified.

USA: +1 800 522 6752
Asia Pacific: +86 0 400 820 6015
UK: +44 800 267 666

For additional support numbers please visit www.te.com

## Adapter Code (Continued)

### Table B. Adapter Code by Manufacturer's Prefix
(Continued)

| Manufacturer's Prefix | Manufacturer[6] | Connector Specification | Series/Class | Adapter Code |
|---|---|---|---|---|
| MK25 | Plessey | MIL-C-38999 | Series II | 41 |
| MK7 | Plessey | DEF 5325-2 | Patt 104 | Contact TE |
| MK8 | Plessey | Def. Stan. 59-35 | Patt 105 | 76, 77[4] |
| ML94 | Matrix | MIL-C-38999 | Series IV | 40 |
| MQ3 | Matrix | MIL-C-83723 | Series III | 54 |
| MT3 | Matrix | MIL-C-83723 | Series III | 54 |
| MT93 | Matrix | MIL-C-38999 | Series III | 40 |
| P5 | Plessey | NFL 54 125 | — | 76 or 24[3], 77[4] |
| PAT104D | AB Elec | Def. Stan. 59-35 | Patt 104 | Contact TE |
| PT | Socapex | MIL-C-26482 | Series 1 | 76, 77[4] |
| PT | Teldix | MIL-C-26482 | Series 1 | 76, 77[4] |
| PT-CE | Bendix | None | — | 22 |
| PT-G | Teldix | VG 95328 | — | Contact TE |
| PT-SE | Socapex | MIL-C-26482 | Series 1 | 76, 77[4] |
| PT-SE | Teldix | MIL-C-26482 | Series 1 | 76, 77[4] |
| PT07 | Bendix | MIL-C-26482 | Series 1 | 24[3] |
| PT07SE | FKI[2] | MIL-C-26482 | Series 1 | 24[3] |
| PT33 | FKI[2] | BS9522 F0017 | Patt 105 | 76, 77[4] |
| PT33SE | FKI[2] | BS9522 N0001 | Patt 603 | 76, 77[4] |
| PT44 | FKI[2] | BS9522 F0017 | Patt 105 | 76, 77[4] |
| PT44SE | FKI[2] | BS9522 N0001 | Patt 603 | 76, 77[4] |
| PT55 | FKI[2] | BS9522 F0017 | Patt 105 | 76, 77[4] |
| PT55SE | FKI[2] | BS9522 N0001 | Patt 603 | 76, 77[4] |
| PT77 | FKI[2] | BS9522 F0017 | Patt 105 | 76, 77[4] |
| PT77SE | FKI[2] | BS9522 N0001 | Patt 603 | 76, 77[4] |
| PTG55 | FKI[2] | BS9522 F0017 | Patt 105 | 76, 77[4] |
| PTG55SE | FKI[2] | BS9522 N0001 | Patt 603 | 76, 77[4] |
| PTS-DR | Bendix | MIL-C-26482 | Series 2 | 54 |
| PV7 | Cannon | MIL-C-26482 | Series 2 | 54 |
| PVJ | Cannon | MIL-C-26482 | Series 2 | 54 |
| PVW | Cannon | — | — | 54 |
| PVX | Cannon | Def. Stan. 59-56 | Patt 602 | 54 |
| QDP | Bendix | None | — | 32 |
| QRP | AB Elec | — | — | 78 |
| QWL | Bendix | None | — | 31 |
| QWLD | Bendix | MIL-C-22992 | Class C, J, R | 32 |
| RD1 | Raychem | MIS-20065 | — | 54 |
| RR | Deutsch | Def. Stan. 59-56 | Patt 602 | 54 |
| RR20 | Deutsch | PAN 6432-2 | — | 54 |
| RR50 | Deutsch | PAN 6432-1 | — | 54 |
| RR70 | Deutsch | PAN 6432-2 | — | 54 |
| RSM | Deutsch | None | — | 71 |
| RTK | Deutsch | None | — | 71 |
| SA | SAE | MIL-C-5015 | MS3400 | 54 |
| SB | Bendix | MIL-C-5015 | Class E | 18 |
| SB-104 | AB Elec | Def. Stan. 59-35 | Patt 104 | Contact TE |
| SB-M4 | AB Elec | Def. Stan. 59-35 | Patt 104 | Contact TE |
| SB-MS | AB | BS9522 F0030 | — | 75 |
| SC | Bendix | MIL-C-5015 | MS3100 Class A | 18 |
| SCB | SICEM | VG 95234 | — | Contact TE |
| SF | Bendix | MIL-C-5015 | MS3100 Class E | 18 |
| SG | Bendix | MIL-C-5015 | MS3100 Class E | 18 |
| SJT | Various | PAN 6433-2 | — | 47 |
| SJT07 | Various | PAN 6433-2 | — | Contact TE |
| SLPT | Deutsch | MIL-C-26482 | Series 1 | 76, 77[4] |

[2]FKI was previously Thorn.
[3]Code 24 connectors have an internal accessory thread.
[4]Code 77 braided version.







Dimensions are shown for reference purposes only. Specifications subject to change.

Dimensions are in millimeters unless otherwise specified.

USA: +1 800 522 6752
Asia Pacific: +86 0 400 820 6015
UK: +44 800 267 666

For additional support numbers please visit www.te.com

## Adapter Code (Continued)

### Table B. Adapter Code by Manufacturer's Prefix
(Continued)

| Manufacturer's Prefix | Manufacturer[6] | Connector Specification | Series/Class | Adapter Code |
|---|---|---|---|---|
| SM | Bendix | MIL-C-5015 | MS3100 Class A, E, R | 18 |
| SPT | Bendix | MIL-C-26482 | Series 1 | 76, 77[4] |
| SPT | Socapex | MIL-C-26482 | Series 1 | 76, 77[4] |
| SPT07 | Various | MIL-C-26482 | Series 1 | 24[3] |
| STK | Deutsch | None | — | 71 |
| STT | FKI[2] | BS9522 F0012 | Patt 615 | 47 |
| STT07 | FKI[2] | BS9522 F0012 | Patt 615 | Contact TE |
| T3[1] | Pyle | MIL-C-38999 | Series III | 40 |
| TRIM TRIO | Burndy | None | — | Contact TE |
| TT | FKI[2] | BS9522 N0003 | Patt 614 | 41 |
| TV | FKI[2]/Bendix | MIL-C-38999 | Series III | 40 |
| TV-O-R | Bendix | MIL-C-38999 | Series III and IV | 40 |
| TVP | FKI[2]/Bendix | MIL-C-38999 | Series III | 40 |
| TVPS | FKI[2]/Bendix | MIL-C-38999 | Series III | Contact TE |
| TVS | FKI[2]/Bendix | MIL-C-38999 | Series III | Contact TE |
| Tri-Start | Bendix | MIL-C-38999 | Series III and IV | 40 |
| VPT | VEAM | MIL-C-26482 | Series 1 | 21 |
| VTT | FKI[2] | MIL-C-38999 | Series III | 40 |
| ZZY/ZZW | Pyle | MIL-C-26500 | Class R, G (AL) | 51 |
| ZZY/ZZW | Pyle | MIL-C-26500 | Class E (SST) | 52 |

[1]May be a number or letter depending upon connector style.
[2]FKI was previously Thorn.
[3]Code 24 connectors have an internal accessory thread.
[4]Code 77 braided version.
[5]Free connectors only.
[6]Some of the connector manufacturers names may have changed and may not exist. They are listed here to assist users who know them as listed names.



Catalog 1654025
Revised 3-13

www.te.com

Dimensions are shown for reference purposes only. Specifications subject to change.

Dimensions are in millimeters unless otherwise specified.

USA: +1 800 522 6752
Asia Pacific: +86 0 400 820 6015
UK: +44 800 267 666

For additional support numbers please visit www.te.com

## Adapter Code (Continued)

### Table C. Adapter Code by Connector Specification

| Connector Specification | Series/Class | Adapter Code |
|---|---|---|
| 40M38277 | — | 41 |
| 40M39569 | — | 54 |
| BS9520 | G0001 | 41 |
| BS9520 | G0002 | 41 |
| BS9520 | G0003 | 40 |
| BS9522 F0012 | Patt 615 | 47 |
| BS9522 F0014 | Patt 104 | Contact TE |
| BS9522 F0017 | Patt 105 | 76 |
| BS9522 F0020 | Patt 608 | 79[2] |
| BS9522 F0023 | — | Contact TE |
| BS9522 F0029 | Patt 616 | 41 |
| BS9522 F0030 | Patt 121A | 75 |
| BS9522 F0032 | Patt 121B | 78 |
| BS9522 F0042 | — | 54 |
| BS9522 N0001 | Patt 603 | 76 |
| BS9522 N0003 | Patt 614 | 41 |
| BS9540 F0001 | Patt 602 | 54 |
| LN 29500 | — | 21 |
| LN 29504 | — | 54 |
| LN 29728 | — | 54 |
| LN 29729 | — | 47 |
| MIL-C-22992 | Class C, J, R | 32 |
| MIL-C-26482 | Series 1 | 21, 24[1] |
| MIL-C-26482 | Series 2 | 54 |
| MIL-C-26500 | Aluminum, Class F, G, R | 51 |
| MIL-C-26500 | Stainless steel, Class E, K | 52 |
| MIL-C-28840 | Class D | 30 |
| MIL-C-38999 | Series I and II | 41 |
| MIL-C-38999 | Series III and IV | 40 |
| MIL-C-5015 | MS3400 | 54 |
| MIL-C-5015 | MS3100 | 18, 15 (with endbell) |
| MIL-C-5015 | 5MS | 75 |
| MIL-C-81511 | Series 1, 2, 3, and 4 | 61 |
| MIL-C-81703 | Series 1, 2 | 71 |
| MIL-C-81703 | Series 3 | 54 |
| MIL-C-83723 | Series II | 19 |
| MIL-C-83723 | Series I and III | 54 |
| MIL-C-85049/59 | — | 32 |
| MIL-C-85049/60 | — | 54 |
| MIL-C-85049/62 | — | 41 |
| MIL-C-85049/69 | — | 40 |
| MIS-20065 | — | 54 |
| MVEE | 5MS | 75 |
| NAS 1599 | — | 54 |
| NFL 54120 | — | Contact TE |
| NFL 54140 | — | 54 |
| PAN 6432-1 | — | 54 |
| PAN 6432-2 | — | 54 |
| PAN 6433-1 | — | 41 |
| PAN 6433-2 | — | 47 |
| PRL 54125 | — | 21, 24[1] |
| VG 95234 | — | 64***, 66**, 78* |
| VG 95328 | — | Contact TE |
| VG 95329 | — | 61 |
| VG 96912 | Series 2 | 41 |
| VG 96912 | Series 1 | 47 |

[1]Code 24 connectors have an internal accessory thread.
[2]Free connectors only.

* AB connectors only
** VEAM standard
***VEAM panel mount







Dimensions are shown for reference purposes only. Specifications subject to change.

Dimensions are in millimeters unless otherwise specified.

USA: +1 800 522 6752
Asia Pacific: +86 0 400 820 6015
UK: +44 800 267 666

For additional support numbers please visit www.te.com

## Adapter Family

### Selecting the Adapter Family

Using Table D below and the adapter code you selected in Table A, B, or C, select the adapter family for the adapter type you chose (spin-coupling or Tinel-Lock).

With the alphanumeric prefix for that family you can then build the part number for your TE adapter.

### Table D. Identification of Adapter Family Prefix by Adapter Code

| TE Connector Code | Boot Adapter | | Shielded Adapter | | | Tinel-Lock Adapter Straight, 45°, and 90° | CRES-Lock Band Strap Adapter |
|---|---|---|---|---|---|---|---|
| | Solid (Fixed) | Spin-Coupling | Straight | 45° | 90° | | |
| 15 | 210M5 | 202M5 | 219M0 | 219M1 | 219M2 | TXR 15 | — |
| 18 | 218M5 | 218M6 | 218M7 | 218M8 | 218M9 | TXR 18 | BND 18 |
| 19 | 201M7 | 201M4 | — | — | — | — | — |
| 21 | 203M6 | 203M9 | 206M0 | 206M1 | 206M2zx | TXR 21 | BND 21 |
| 24 | 208M5 | 208M6 | 216M0 | 216M1 | 206M5 | — | — |
| 30 | 211M8 | 211M9 | 211M5 | 211M6 | 211M7 | TXR 30 | — |
| 32 | — | 204M3 | 207M3 | 212M4 | 212M5 | TXR 32 | BND 32 |
| 40 | 209M3 | 209M4 | 208M7 | 208M8 | 208M9 | TXR 40 | BND 40 |
| 41 | 202M1 | 202M2 | 204M0 | 204M1 | 204M2 | TXR 41 | BND 41 |
| 47 | 202M8 | 202M7 | 210M0 | 210M1 | 210M2 | TXR 47 | BND 47 |
| 51 | 207M4 | 205M5 | 207M0 | 207M1 | 207M2 | TXR 51 | — |
| 52 | 208M3 | 209M6 | 208M0 | 208M1 | 208M2 | TXR 52 | — |
| 54 | 201M9 | 201M1 | 203M0 | 203M1 | 203M2 | TXR 54 | BND 54 |
| 61 | 202M3 | 202M4 | 205M0 | 205M1 | 205M2 | TXR 61 | — |
| 71 | 203M5 | 202M9 | 217M0 | 217M1 | 217M2 | TXR 71 | — |
| 75 | 228M5 | 228M7 | 227M0 | 227M1 | 227M2 | TXR 75 | — |
| 76 | 225M6 | 225M5 | — | — | — | TXR 76 | — |
| 77 | 228M6 | 228M8 | 228M0 | 228M1 | 228M2 | — | — |
| 78 | 225M4 | 225M3 | 225M0 | 225M1 | 225M2 | TXR 78 | — |
| 79 | — | 229M3 | 229M1 | 229M2 | 229M0 | TXR 79 | — |
| 80 | 215M4 | 213M5 | 213M6 | 213M7 | 213M8 | TXR 80 | — |
| 81 | 214M3 | 214M4 | 214M5 | 214M6 | 214M7 | TXR 81 | — |



Dimensions are shown for reference purposes only. Specifications subject to change.

Dimensions are in millimeters unless otherwise specified.

USA: +1 800 522 6752
Asia Pacific: +86 0 400 820 6015
UK: +44 800 267 666

For additional support numbers please visit www.te.com

## Part Number

**Having Selected the Right Adapter Type and Adapter Family, You Can Now Construct a Part Number for the Adapter.**

1. Start with the alphanumeric prefix you selected in Table D. This will be the basis of your part number.
2. Add to the prefix the codes and designators required for your adapter type and application. These may include several or all of the following:
   - Order number
   - Manufacturer's prefix
   - Material
   - Finish
   - Entry size
   - Ring designator
   - Option codes

Using the right codes and designators helps ensure that the adapter you select will meet the application requirements.

To determine which codes and designators you will need, use the Part numbering system shown below. To select the right codes and designators, turn to the pages that follow.

### Part Numbering System

201M1 16 - 19 B

**Spin-Coupling or Solid Adapter**

Adapter family
Order number
Manufacturer's prefix (connector code 18 only)
Material
Finish
Options*

*For full range of options, consult TE.

203M0 16 - 19 B 10

**Shielded Adapter**

Adapter family
Order number
Manufacturer's prefix (connector code 18 only)
Material
Finish
Entry size
Options*

- Standard braid length (6") requires no modification code.
- Nonstandard braid length is stated in inches (12 = 12" length)

*For full range of options, consult TE.

TXR54 A B 00 - 16 10 AI

**Tinel-Lock Adapter**

Adapter family
Material (A - aluminium alloy; S = stainless steel)
Finish
Angle (00 = straight; 45 = 45˚; 90 = 90˚)
Manufacturer's prefix (connector code 18 only)
Order number
Entry size
Ring designator
Options*

*For full range of options, consult TE.





Catalog 1654025
Revised 3-13

www.te.com

Dimensions are shown for reference purposes only. Specifications subject to change.

Dimensions are in millimeters unless otherwise specified.

USA: +1 800 522 6752
Asia Pacific: +86 0 400 820 6015
UK: +44 800 267 666

For additional support numbers please visit www.te.com

## Part Number (Continued)

### CRES-Lock Band Strap Adapters Part Numbering System

BND 54 A B 00 - 12 06 A

**Product Designator**
BND — Adapter and Band
BNX — Adapter only

**Adapter Code**

**Material**[2]
A — Aluminum alloy per QQ-A-225
B — Nickel aluminum bronze per ASTM B150
S — Stainless steel per QQ-S-763

**Finish** (See S-CH00-0157-002)

**Configuration**
00 = Straight 45 = 45° 90 = 90°
4W = 45° 9W = 90°

**For BND 18, dash may be replaced by a letter**

**Order Number**

**Entry Size**[3]

**Band Termination Device Code**[1]
A — BND-1225S (Standard Supply for Americas and Asia)
CRES-Lock Banding Strap
B — BND-1425S (Standard Supply European Countries)

**Notes:**
1. See Drawings BND-1225S or BND-XX25S for information on bands. Adapter dimensions for "A" designation may be different than those listed in this catalog. Contact Tyco Electronics for Specification Control Drawing (SCD) for these adapters.
2. Alternative equivalent material specifications to those shown may be supplied at Tyco Electronics' discretion.
3. For standard entry sizes see relevant specification control drawing. For entry sizes larger than standard (Type II Adapters), see sheets 3 and 4.

### Band Strap Adapter Modification Option Field (Omit if not required)

BND54AB00-1206A D F H J L N P S

**D — Drain holes modification**

**F — Internal abrasion resistant coating**

**H — Helical conduit thread**

**J — Chain attachment assembly**

**L — Lock wire holes manufacturer's option**
Include mod if required
Standard on codes 40 and 54

**Optional O-Ring material**
Omit for standard silicone (ZZ-R-765, grade 70: S59)
C — Neoprene per AMS3209
U — Fluorosilicone per MIL-R-25988, class 1
N — Nitrile (Buna N) per AMS3215
V — Fluorocarbon per MIL-R-83248, class 1

**P — Pre-coiled bandstrap option**
(See drawings BND-1225P or BND-XX25P)

**S — Self-locking spin nut**



Dimensions are shown for reference purposes only. Specifications subject to change.

Dimensions are in millimeters unless otherwise specified.

USA: +1 800 522 6752
Asia Pacific: +86 0 400 820 6015
UK: +44 800 267 666

For additional support numbers please visit www.te.com

## Material and Finish

### Selecting the Material and Finish

To ensure optimum compatibility, select the adapter material and finish to match those of the connector.

Most circular connectors are manufactured from aluminum with a cadmium finish.

### Material Codes

| Material* Description | Material Code Solid, Spin-Coupling, and Shielded Adapters | Tinel-Lock Adapters | Typical Applications |
|---|---|---|---|
| Aluminum alloy | 19 | A | Standard material for normal applications |
| Stainless steel | 62 | S | Corrosion-resistant and high-temperature (firewall) applications |
| Nickel aluminum bronze | 01 | B | Exposed marine environments |

*Other materials available upon request.

### Finish Codes

| Finish* Description | Color | Finish Code | Typical Applications |
|---|---|---|---|
| Cadmium, per QQ-P-416, Type II, Class 3 over electroless nickel (500-hour salt-spray–resistant finish) | Olive drab | B | Corrosion resistance for exposed environments |
| Electroless nickel, per AMS-C-26074, Class 4, Grade B | Bright Silver | C | High conductivity for optimum screening performance |
| Anodized, hard, per MIL-A-8625, Type III, Class 2 | Black | G | Nonconductive finish for aluminum adapters |
| Passivated, per QQ-P-35 or MIL-S-5002 | — | J | Surface treatment for corrosion-resistant steel |
| Unplated, shotblast | — | W | Nonreflective finish for nickel aluminum bronze adapters |
| Zinc Nickel | Black | Z | Cadmium free plating |

*Other finishes available upon request.





Catalog 1654025
Revised 3-13

www.te.com

Dimensions are shown for reference purposes only. Specifications subject to change.

Dimensions are in millimeters unless otherwise specified.

USA: +1 800 522 6752
Asia Pacific: +86 0 400 820 6015
UK: +44 800 267 666

For additional support numbers please visit www.te.com

## Entry Size

### Determining the Wire Bundle Size

The entry size of an adapter is based on the size of the wire bundle. If you don't know the size of the wire bundle, measure a prototype or calculate the size.

Calculation of the wire bundle size is based on three values:

- Cable outside diameter (COD)
- Cable jacket thickness
- Jacketed cable diameter

Instructions for calculating these values follow.

#### COD Calculation

To calculate the cable outside diameter, first determine whether the wires in the bundle are of the same size or of different sizes.

#### COD Calculation for Wires of the Same Size

For bundles with wires that are all of the same size, follow these steps:

1. Determine the number of wires in the wire bundle.
2. Find the multiplication factor for that number in Table E shown on the next page.
3. Find the wire diameter in the Wire and Cable section (Section 9) of this catalog.
4. Multiply the wire diameter (from Step 3) by the multiplication factor (from Step 2) as shown below.

Formula: D = Fd

Where:
D = Bundle diameter

F = Multiplication factor

d = Wire diameter

Example: A bundle of wires containing 27 x 44A0111-22

F = 6.00 (the multiplication factor for 27 wires from Table E)

d = 1.19 mm (.049 in)*

D = 6 x 1.19 mm (6 x .049 in)

D = 7.14 mm (.294 in)

*Diameter of 44A0111-22 wire obtained from the Wire and Cable Section 9 of this catalog.

#### COD Calculation for Wires of Different Sizes

To determine the wire bundle diameter when using wires of different sizes, follow these steps:

1. Determine the number of wires in the wire bundle.
2. Find the diameter of the wires in the Wire and Cable section of this catalog.
3. Calculate the cable outside diameter by using this formula:

$$D = 1.2\sqrt{N1d12 + N2d\ 22 + N3d32}$$

Where:
D = Bundle diameter

N = Number of wires

d = Diameter of wires

Example: A bundle of wires containing

3 x 44A0111-221* (1.192-mm dia.)

5 x 44A0111-201* (1.42-mm dia.)

1 x 44A0111-181* (1.65-mm dia.)

$$D = 1.2\sqrt{3 \times 1.192^2 + 5 \times 1.42^2 + 1 \times 1.65^2}$$
$$D = 1.2\sqrt{3 \times 1.4 + 5 \times 2.02 + 1 \times 2.7}$$
$$D = 1.2\sqrt{4.2 + 10.1 + 2.7}$$
$$D = 1.2\sqrt{17}$$
$$D = 1.2 \times 4.12$$
$$D = 4.95\ \text{mm}$$

*For wire information see the Wire and Cable Section 9 of this catalog.



Catalog 1654025
Revised 3-13

www.te.com

Dimensions are shown for reference purposes only. Specifications subject to change.

Dimensions are in millimeters unless otherwise specified.

USA: +1 800 522 6752
Asia Pacific: +86 0 400 820 6015
UK: +44 800 267 666

For additional support numbers please visit www.te.com

## Entry Size (Continued)

### Table E. Multiplication Factors for Wire Bundles with Equal Size Wires

This table provides multiplication factors for wire bundles of 1 to 61 wires.

To determine the approximate diameter of a wire bundle when the wires are all the same size, find the factor for the number of wires in the bundle and multiply the wire diameter by that factor.

| Number of Wires | Multiplication Factor | Number of Wires | Multiplication Factor |
|---|---|---|---|
| 1 | 1.00 | 32 | 6.70 |
| 2 | 1.60 | 33 | 6.70 |
| 3 | 2.00 | 34 | 7.00 |
| 4 | 2.41 | 35 | 7.00 |
| 5 | 2.70 | 36 | 7.00 |
| 6 | 3.00 | 37 | 7.00 |
| 7 | 3.00 | 38 | 7.31 |
| 8 | 3.60 | 39 | 7.31 |
| 9 | 4.00 | 40 | 7.31 |
| 10 | 4.00 | 41 | 7.61 |
| 11 | 4.00 | 42 | 7.61 |
| 12 | 4.00 | 43 | 7.61 |
| 13 | 4.41 | 44 | 7.61 |
| 14 | 4.41 | 45 | 8.00 |
| 15 | 4.70 | 46 | 8.00 |
| 16 | 4.70 | 47 | 8.00 |
| 17 | 5.00 | 48 | 8.00 |
| 18 | 5.00 | 49 | 8.41 |
| 19 | 5.00 | 50 | 8.41 |
| 20 | 5.31 | 51 | 8.41 |
| 21 | 5.31 | 52 | 8.41 |
| 22 | 5.61 | 53 | 8.70 |
| 23 | 5.61 | 54 | 8.70 |
| 24 | 5.61 | 55 | 8.70 |
| 25 | 6.00 | 56 | 8.70 |
| 26 | 6.00 | 57 | 9.00 |
| 27 | 6.00 | 58 | 9.00 |
| 28 | 6.41 | 59 | 9.00 |
| 29 | 6.41 | 60 | 9.00 |
| 30 | 6.41 | 61 | 9.00 |
| 31 | 6.70 | — | — |





Catalog 1654025
Revised 3-13

www.te.com

Dimensions are shown for reference purposes only. Specifications subject to change.

Dimensions are in millimeters unless otherwise specified.

USA: +1 800 522 6752
Asia Pacific: +86 0 400 820 6015
UK: +44 800 267 666

For additional support numbers please visit www.te.com

## Entry Size (Continued)

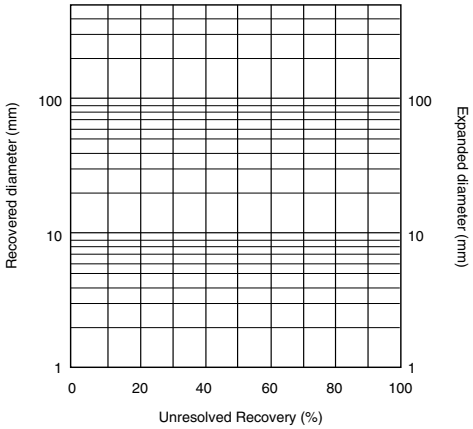


**Figure 1.**

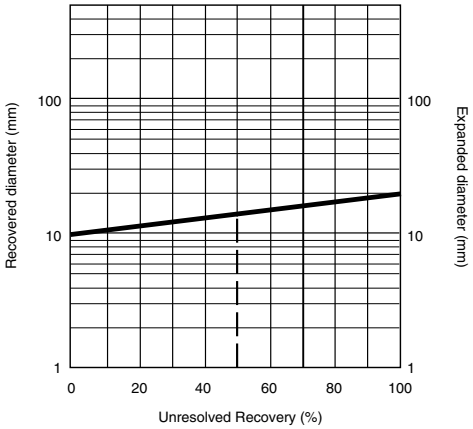


**Figure 2.**

### Cable Jacket Thickness Calculation

To determine the wall thickness of a jacket over a wire bundle:

1. Use the chart in Figure 1 to determine the unresolved recovery of the tubing jacket
2. Use the chart in Figure 3 to determine the wall thickness reduction factor.
3. Calculate the jacket wall thickness by multiplying the fully shrunk wall thickness (as detailed in the Tubing section — Section 3 — of this catalog) by the wall thickness reduction factor.

### Step 1. Determine the Unresolved Recovery of the Tubing Jacket.

1. Locate the recovered and expanded diameters of the chosen tubing size on the chart in Figure 1.
2. Lay a straight edge between the two values and pencil in a straight line connecting them.
3. Find the wire bundle diameter on the Expanded Diameter scale of the chart in Figure 1.
4. From the wire bundle diameter value, draw a straight horizontal line across the chart.
5. From the intersection of the line from step 3 and the line from step 2, read down vertically to the “Unresolved Recovery” for this combination.

Example (see Figure 2):

Recovered tubing diameter = 10 mm

Expanded tubing diameter = 20 mm

Wire bundle diameter =13 mm

Unresolved recovery = 50%



Catalog 1654025
Revised 3-13

www.te.com

Dimensions are shown for reference purposes only. Specifications subject to change.

Dimensions are in millimeters unless otherwise specified.

USA: +1 800 522 6752
Asia Pacific: +86 0 400 820 6015
UK: +44 800 267 666

For additional support numbers please visit www.te.com

## Entry Size (Continued)

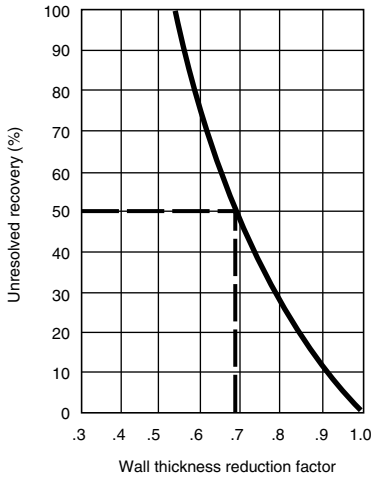


**Figure 3.**

**Step 2. Find the Wall Thickness Reduction Factor.**

1. On the Unresolved Recovery scale of the chart in Figure 3 above, find the unresolved recovery value determined in Step 1.
2. From the unresolved recovery value, draw a straight line across the chart to the curved line.
3. At the point where that line intersects the chart's curved line, read vertically down to the wall thickness reduction factor.

Example shown:

Unresolved recovery = 50%

Reduction factor = 0.68

**Step 3. Calculate the Jacket Wall Thickness.**

Multiply the fully shrunk wall thickness of the tubing by the reduction factor.

Example:

Fully shrunk wall thickness of tubing = 1.45 mm

Wall thickness reduction factor (from Figure 3) = 0.68

Jacket wall thickness = 1.4 x 0.68

= 0.99 mm

Note:
If the cable is to be shielded (screened), an addition must be made to the wire bundle diameter for the braid. In the example, 0.8 mm would be added to the wire bundle diameter for a single layer of RAY 101 (36 AWG) braid to make a total wire bundle diameter of 13.8 mm.

## Entry Size (Continued)

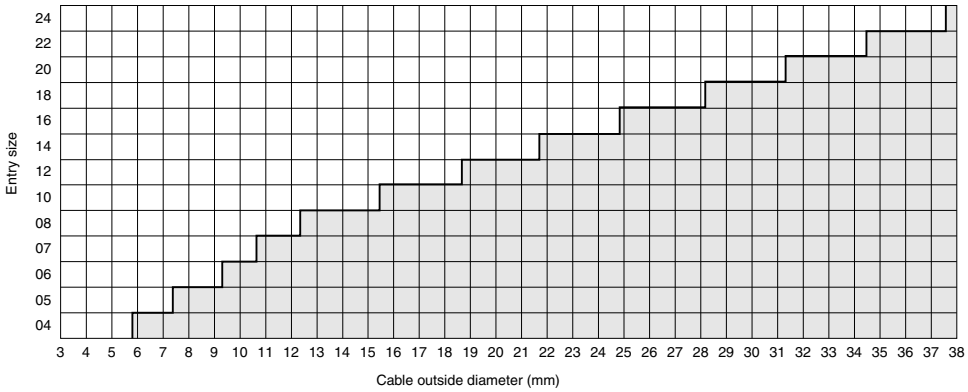


**Figure 4. Entry Size by Cable Outside Diameter (in millimeters)**

### Determining the Entry Size

Once you have the wire bundle size, you can use the chart in Figure 4 to select the entry size. This chart shows the minimum entry sizes for cables from 3 to 38 mm [.118 to 1.496 in] in diameter. In other words, the white spaces on the chart represent all of the cable outside diameters each entry size will fit.

Follow these steps:

1. Find the cable diameter on the chart.
2. Note the lowest entry size that will fit the cable diameter

### Braided Adapters

The extreme flexibility of the braid on these adapters accommodates a large range of cable diameters. It is therefore recommended that the standard entry size for any given adapter part number be specified as indicated on the relevant data sheet. Nonstandard entry sizes are available on special order.

Use the selection chart in Figure 4 to ensure that the standard entry size will pass over the jacketed cable diameter.

### Tinel-Lock Adapters

With Tinel-Lock adapters, the cable braid must be opened up to fit onto the outside diameter of the adapter entry. For optimum performance, select the smallest entry size that will pass over the jacketed cable diameter. Repair of the connector will be easier using the boot and shield rollback if a slightly larger than minimum entry size is used.

The selection chart in Figure 4 shows the minimum entry sizes for cable diameters in the range of 3 mm to 38 mm. This will ensure that the jacketed cable passes through the adapter for easy assembly.

It should be checked to be sure the braid will open sufficiently to fit the entry size selected and to ensure that the braid and boot can be rolled back.

## Entry Size (Continued)

### Ray 101 Tinned-Copper Braid

TE manufactures a range of Raychem tubular braided shields (sometimes called “screens”) that are used for shielding hand-built harnesses.

These braids are specially designed to have:

- Good surface transfer impedance
- Large opening ratio
- Good handling characteristics
- Compatibility with Tinel-Lock adapters

Sizes are available to cover wire bundle diameters from 2.5 to 38 [.10 to 1.50]. The table below shows the wire bundle diameter range for each braid size and also shows which adapter entry sizes are compatible with each of these braids and bundle diameters.

The entry sizes do not allow for the additional thickness of the braid and the heat-shrunk cable jacket.

### Ray 101 Data

| Part No. | Number of Carriers | Number of Ends/ Carrier | Individual Strand Size (mm/AWG) | Wire Bundle Diameter Range | | | Tinel Adapter Entry Size (Single-Layer Braid) |
|---|---|---|---|---|---|---|---|
| | | | | Min. | Max. | Wall Thickness (Nom.) | |
| RAY 101-3.0 | 16 | 10 | 0.1 [38] | 2.5 [.10] | 5.0 [.20] | N/A | N/A |
| RAY 101-4.0 | 24 | 7 | 0.13 [36] | 3.5 [.14] | 7.5 [.30] | 0.4 [.02] | 04* |
| RAY 101-6.0 | 24 | 9 | 0.13 [36] | 4.0 [.16] | 9.5 [.37] | 0.4 [.02] | 04, 05, 06*, 07 |
| RAY 101-7.5 | 24 | 14 | 0.13 [36] | 6.0 [.24] | 14.0 [.55] | 0.4 [.02] | 05, 06, 07, 10* |
| RAY 101-10.0 | 36 | 12 | 0.13 [36] | 8.0 [.31] | 22.0 [.87] | 0.4 [.02] | 07, 08, 10 12* |
| RAY 101-12.5 | 36 | 15 | 0.13 [36] | 10.0 [.39] | 24.0 [.94] | 0.4 [.02] | 08, 10, 12,14, 16* |
| RAY 101-20.0 | 48 | 16 | 0.13 (36] | 16.0 [.63] | 38.0 [1.50] | 0.4 [.02] | 12, 14, 16, 18, 20, 22 |

*Combination is not preferred; use only if absolutely necessary.





Catalog 1654025
Revised 3-13

www.te.com

Dimensions are shown for reference purposes only. Specifications subject to change.

Dimensions are in millimeters unless otherwise specified.

USA: +1 800 522 6752
Asia Pacific: +86 0 400 820 6015
UK: +44 800 267 666

For additional support numbers please visit www.te.com

## Tinel-Lock Ring

### Tinel-Lock Ring and Braid

The Tinel-Lock ring designator must be specified according to the type of cable braid used, and is added to the part number after the adapter entry size. There are two types of ring, AI and BI, for each entry size.

Tinel rings are marked with thermochromic paint, which changes color when the correct installation temperature is reached. BI-type rings are identified with a red spot.

Braid type, material, and construction are variable. Refer to drawing CH00-0250-008 for Tinel-Lock adapters.

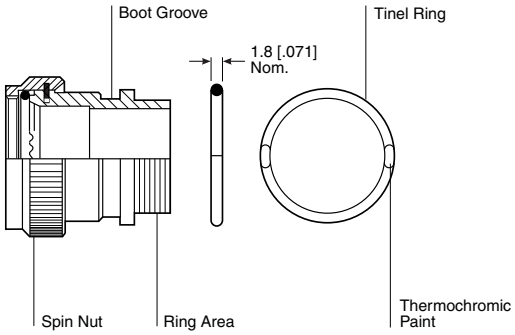


| Braid Type | Ring Designator |
|---|---|
| Single layer 36 AWG | AI |
| Single layer 34 AWG | AI |
| Single layer 32 AWG | BI |
| Single layer 30 AWG | BI |
| Double layer 36 AWG | BI |
| Double layer 34 AWG | BI |

A or B = Size of Braid  I = Insulating Layer

### Table F. Wire Gauge (AWG) to Diameter Cross-Reference

**Use this table to establish wire gauge if not known.**

| Wire Gauge (AWG) | Diameter |
|---|---|
| 40 | 0.079 [0.0031] |
| 39 | 0.089 [0.0035] |
| 38 | 0.102 [0.0040] |
| 37 | 0.114 [0.0045] |
| 36 | 0.127 [0.0050] |
| 35 | 0.142 [0.0056] |
| 34 | 0.160 [0.0063] |
| 33 | 0.180 [0.0071] |
| 32 | 0.203 [0.0080] |
| 31 | 0.226 [0.0089] |
| 30 | 0.254 [0.0100] |
| 29 | 0.287 [0.0113] |
| 28 | 0.320 [0.0126] |

*Note: It may be necessary to use an 'A' rather than a 'B" ring on entry sizes 04-07 when terminating a multicore cable with double layer machined braid. Braid applied by machine provides less size flexibility than pull-on braid at the smaller entry sizes. If disturbance during assembly causes loss of braid lay, grip of the tinel ring may be affected. Evaluation is recommended. Contact TE for more information.

| Available in: | Americas | Europe | Asia Pacific |
|---|---|---|---|
| | ■ | ■ | ■ |



Dimensions are shown for reference purposes only. Specifications subject to change.

Dimensions are in millimeters unless otherwise specified.

USA: +1 800 522 6752
Asia Pacific: +86 0 400 820 6015
UK: +44 800 267 666

For additional support numbers please visit www.te.com

## CRES-Lock Bands

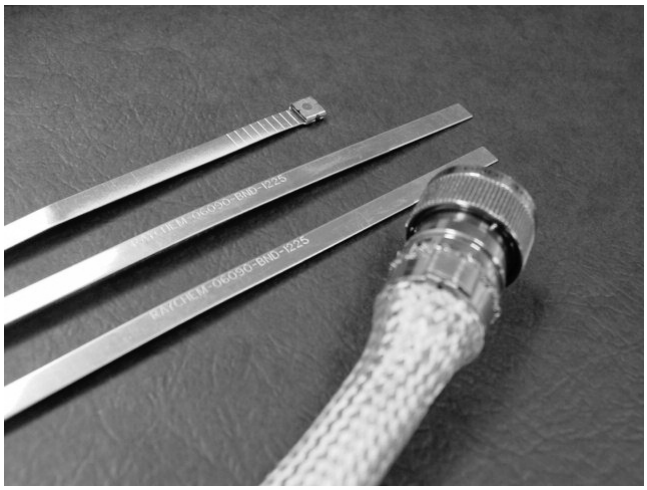

The CRES-Lock band strap designator must be specified when using a band adapter. There are two forms of band that are available — precoiled and straight. Straight is a standard configuration and does not require any notation. If precoiled bands are required, an option P must be used. Refer to CH00-0250-016 drawing for more detailed information. CRES-Lock band strap comes in 12 inch length. These fit all entry sizes for both the CRES-Lock adapter.



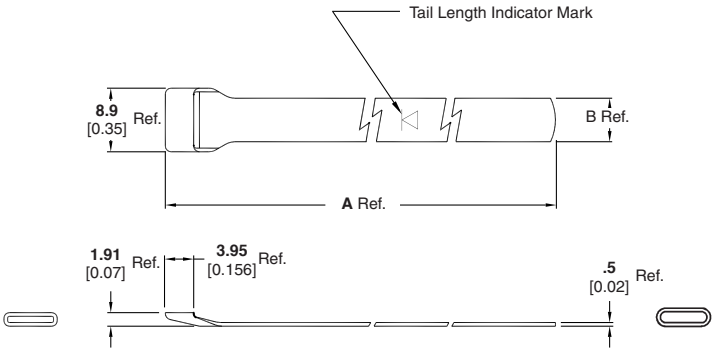


**One Step Clamping Band — Straight**

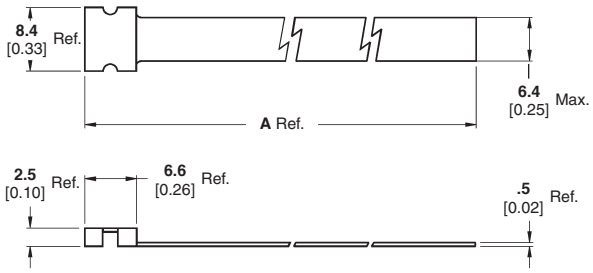


**Two Step Clamping Band — Straight**

| Part Number | Entry SIzes | A Ref. ±1.5 [±0.06] |
|---|---|---|
| BND-1225S | 03 to 24 | **305.0**<br>12.00 |
| BND-0812S | 04 to 14 | **304.8**<br>12.00 |

| Available in: | Americas | Europe | Asia Pacific |
|---|---|---|---|
| | ■ | ■ | ■ |



Dimensions are shown for reference purposes only. Specifications subject to change.

Dimensions are in millimeters unless otherwise specified.

USA: +1 800 522 6752
Asia Pacific: +86 0 400 820 6015
UK: +44 800 267 666

For additional support numbers please visit www.te.com

## Code 18 MIL-C-5015 (MS3100)

### Braided Adapters

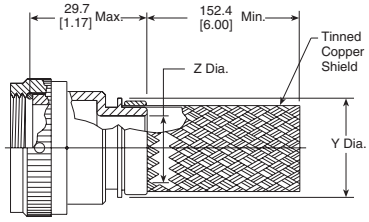


218M7XX-XXXXX

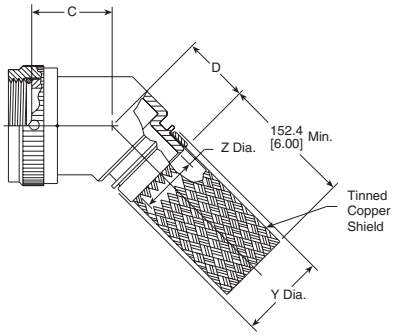


218M8XX-XXXXX

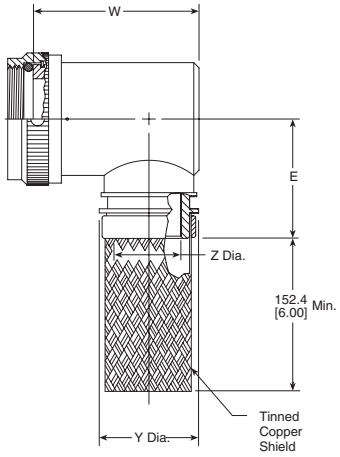


218M9XX-XXXXX

| Manufacturer Code | Connector Manufacturer MS3100/3101/3106 |
|---|---|
| A | Amphenol-Class A |
| B | Bendix-Class A/E/R |
| C | Cannon-Class A/E/R |
| D* | Unknown-Class A/E/R |
| R | Amphenol-Class R |
| — | Manufacturer code not required |

*Additional pieces supplied when manufacturer is unknown.
All thread sizes for order number apply.

| Available in: | Americas | Europe | Asia Pacific |
|---|---|---|---|
| | ■ | ■ | ■ |



Catalog 1654025
Revised 3-13

www.te.com

Dimensions are shown for reference purposes only. Specifications subject to change.

Dimensions are in millimeters unless otherwise specified.

USA: +1 800 522 6752
Asia Pacific: +86 0 400 820 6015
UK: +44 800 267 666

For additional support numbers please visit www.te.com

## Code 18 MIL-C-5015 (MS3100) (Continued)

### Braided Adapters
(continued)

### Table of Dimensions

| Order No. | Shell Size | Manufacturer Code | Max. Entry Size, Type 1** | Thread | Dimensions | | |
|---|---|---|---|---|---|---|---|
| | | | | | C Max. | D Max. | E Max. |
| 08 | 8S | B | 04 | .375-32 UNEF | 20.3 [0.80] | 23.4 [0.92] | 31.2 [1.23] |
| 08 | 8S | C | 04 | .438-28 UNEF | 20.3 [0.80] | 23.4 [0.92] | 31.2 [1.23] |
| 08 | 8S | A, R | 04 | .438-27 UNS | 20.3 [0.80] | 23.4 [0.92] | 31.2 [1.23] |
| 08 | 8S | D | 04 | See * above. | 20.3 [0.80] | 23.4 [0.92] | 31.2 [1.23] |
| 10 | 10S | — | 06 | .500-28 UNEF | 21.1 [0.83] | 24.1 [0.95] | 31.2 [1.23] |
| 11 | 10SL | C | 07 | .562-24 UNEF | 21.1 [0.83] | 24.1 [0.83] | 31.2 [1.23] |
| 11 | 10SL | A, B, R | 07 | .625-24 UNEF | 21.1 [0.83] | 24.1 [0.95] | 31.2 [1.23] |
| 11 | 10SL | D | 07 | See * above. | 21.1 [0.83] | 24.1 [0.95] | 31.2 [1.23] |
| 12 | 12 & 12S | B, C | 08 | .625-24 UNEF | 21.1 [0.83] | 24.1 [0.95] | 31.2 [1.23] |
| 12 | 12 & 12S | A, R | 08 | .688-24 UNEF | 21.8 [0.86] | 24.9 [0.98] | 33.0 [1.30] |
| 12 | 12 & 12S | D | 08 | See * above. | 21.8 [0.86] | 24.9 [0.98] | 33.0 [1.30] |
| 14 | 14 & 14S | — | 10 | .750-20 UNEF | 21.8 [0.86] | 24.9 [0.98] | 33.0 [1.30] |
| 16 | 16 & 16S | — | 12 | .875-20 UNEF | 22.6 [0.89] | 25.9 [1.02] | 36.1 [1.42] |
| 18 | 18 | — | 12 | 1.000-20 UNEF | 23.4 [0.92] | 26.7 [1.05] | 37.6 [1.48] |
| 20 | 20 | A, B, C | 16 | 1.125-18 UNEF | 24.1 [0.95] | 27.4 [1.08] | 39.4 [1.55] |
| 20 | 20 | R | 16 | 1.125-24 UNS | 24.1 [0.95] | 27.4 [1.08] | 39.4 [1.55] |
| 20 | 20 | D | 16 | See * above. | 24.1 [0.95] | 27.4 [1.08] | 39.4 [1.55] |
| 22 | 22 | — | 18 | 1.250-18 UNEF | 24.9 [0.98] | 28.2 [1.11] | 40.9 [1.61] |
| 24 | 24 | — | 20 | 1.375-18 UNEF | 24.9 [0.98] | 28.2 [1.11] | 42.4 [1.67] |
| 28 | 28 | — | 24 | 1.625-18 UNEF | 27.4 [1.08] | 29.7 [1.17] | 47.2 [1.86] |
| 32 | 32 | B, C | 24 | 1.875-16 UN | 28.2 [1.11] | 31.2 [1.23] | 48.8 [1.92] |
| 32 | 32 | A, R | 24 | 1.906-18 UN | 28.2 [1.11] | 31.2 [1.23] | 48.8 [1.92] |
| 32 | 32 | D | 24 | See * above. | 28.2 [1.11] | 31.2 [1.23] | 48.8 [1.92] |
| 36 | 36 | B | 24 | 2.062-16 UNS | 31.2 [1.23] | 32.3 [1.27] | 52.1 [2.05] |
| 36 | 36 | R | 24 | 2.062-20 UNS | 31.2 [1.23] | 32.3 [1.27] | 52.1 [2.05] |
| 36 | 36 | C | 24 | 2.125-16 UN | 31.2 [1.23] | 32.3 [1.27] | 52.1 [2.05] |
| 36 | 36 | A | 24 | 2.125-18 UNS | 31.2 [1.23] | 32.3 [1.27] | 52.1 [2.05] |
| 36 | 36 | D | 24 | See * above. | 31.2 [1.23] | 32.3 [1.27] | 52.1 [2.05] |
| 40 | 40 | B | 24 | 2.312-16 UNS | 32.3 [1.27] | 33.0 [1.30] | 55.1 [2.17] |
| 40 | 40 | A, C, R | 24 | 2.375-16 UN | 32.3 [1.27] | 33.0 [1.30] | 55.1 [2.17] |
| 40 | 40 | D | 24 | See * above. | 32.3 [1.27] | 33.0 [1.30] | 55.1 [2.17] |
| 44 | 44 | – | 24 | 2.625-16 UN | 34.0 [1.34] | 34.5 [1.36] | 61.5 [2.42] |
| 48 | 48 | C | 24 | 2.812-18 UNS | 34.0 [1.34] | 34.5 [1.36] | 61.5 [2.42] |
| 48 | 48 | A, R | 24 | 2.875-16 UN | 34.0 [1.34] | 34.5 [1.36] | 61.5 [2.42] |
| 48 | 48 | D | 24 | See * above. | 34.0 [1.34] | 34.5 [1.36] | 61.5 [2.42] |

**For larger than maximum type 1 entry sizes, a two-piece adapter will be supplied. Contact TE for information.

### Entry Size Dimensions

| Entry Size | Dimensions | | |
|---|---|---|---|
| | Z Dia. +0.25–0.5 | Y Dia. ±0.38 | W Max. |
| 04 | 6.35 [0.250] | 11.58 [0.456] | 31.2 [1.23] |
| 05 | 7.92 [0.312] | 13.08 [0.515] | 32.8 [1.29] |
| 06 | 9.53 [0.375] | 14.76 [0.581] | 34.3 [1.35] |
| 07 | 11.13 [0.438] | 16.33 [0.643] | 36.1 [1.42] |
| 08 | 12.70 [0.500] | 17.91 [0.705] | 37.6 [1.48] |
| 10 | 15.88 [0.625] | 21.11 [0.831] | 40.6 [1.60] |
| 12 | 19.05 [0.750] | 24.21 [0.953] | 43.9 [1.73] |
| 14 | 22.23 [0.875] | 27.46 [1.081] | 47.0 [1.85] |
| 16 | 25.40 [1.000] | 30.61 [1.205] | 50.8 [2.00] |
| 18 | 28.58 [1.125] | 35.08 [1.381] | 54.1 [2.13] |
| 20 | 31.75 [1.250] | 38.25 [1.506] | 57.2 [2.25] |
| 22 | 34.93 [1.375] | 41.43 [1.631] | — |
| 24 | 38.10 [1.500] | 44.60 [1.756] | — |







Dimensions are shown for reference purposes only. Specifications subject to change.

Dimensions are in millimeters unless otherwise specified.

USA: +1 800 522 6752
Asia Pacific: +86 0 400 820 6015
UK: +44 800 267 666

For additional support numbers please visit www.te.com

## Code 18 MIL-C-5015 (MS3100) (Continued)

### Solid Adapters

| Manufacturer Code | Connector Manufacturer MS3100/3101/3106 |
|---|---|
| A | Amphenol-Class A |
| B | Bendix-Class A/E/R |
| C | Cannon-Class A/E/R |
| D* | Unknown-Class A/E/R |
| R | Amphenol-Class R |
| — | Manufacturer code not required |

*Additional pieces supplied when manufacturer is unknown.
All thread sizes for order number apply.

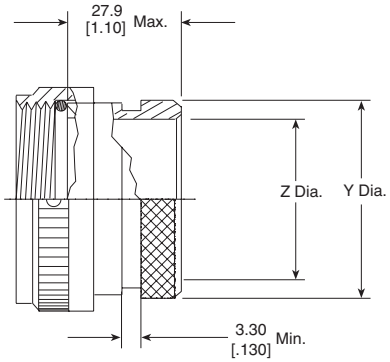


218M6XX-XXX

### Table of Dimensions

| Order No. | Shell Size | Manufacturer Code | Thread | Dimensions | |
|---|---|---|---|---|---|
| | | | | Y ±0.5 | Z Min. |
| 08 | 8S | B | .375–32 UNEF | 13.2 [0.52] | 6.22 [0.24] |
| 08 | 8S | C | .438–28 UNEF | 13.2 [0.52] | 7.80 [0.31] |
| 08 | 8S | A, R | .438–27 UNS | 13.2 [0.52] | 7.80 [0.31] |
| 08 | 8S | D | See * above. | 13.2 [0.52] | 7.80 [0.31] |
| 10 | 10S | — | .500–28 UNEF | 15.0 [0.59] | 9.40 [0.37] |
| 11 | 10SL | C | .562–24 UNEF | 15.0 [0.59] | 11.00 [0.43] |
| 11 | 10SL | A, B, R | .625–24 UNEF | 19.3 [0.76] | 12.57 [0.49] |
| 11 | 10SL | D | See * above. | 19.3 [0.76] | 11.00 [0.43] |
| 12 | 12 & 12S | B, C | .625–24 UNEF | 19.3 [0.76] | 12.57 [0.49] |
| 12 | 12 & 12S | A, R | .688–24 UNEF | 19.3 [0.76] | 14.15 [0.56] |
| 12 | 12 & 12S | D | See * above. | 19.3 [0.76] | 12.57 [0.49] |
| 14 | 14 & 14S | — | .750–20 UNEF | 20.9 [0.82] | 15.75 [0.62] |
| 16 | 16 & 16S | — | .875–20 UNEF | 24.1 [0.95] | 18.92 [0.74] |
| 18 | 18 | — | 1.000 - 20 UNEF | 26.1 [1.03] | 20.50 [0.81] |
| 20 | 20 | A, B, C | 1.125–18 UNEF | 34.0 [1.34] | 25.27 [0.99] |
| 20 | 20 | R | 1.125–24 UNS | 34.0 [1.34] | 25.27 [0.99] |
| 20 | 20 | D | See * above. | 34.0 [1.34] | 25.27 [0.99] |
| 22 | 22 | — | 1.250–18 UNEF | 36.3 [1.43] | 28.45 [1.12] |
| 24 | 24 | — | 1.375–18 UNEF | 40.5 [1.59] | 31.62 [1.24] |
| 28 | 28 | — | 1.625–18 UNEF | 43.0 [1.69] | 34.80 [1.37] |
| 32 | 32 | B, C | 1.875–16 UN | 48.4 [1.91] | 41.15 [1.62] |
| 32 | 32 | A, R | 1.906–18 UN | 48.4 [1.91] | 41.15 [1.62] |
| 32 | 32 | D | See * above. | 48.4 [1.91] | 41.15 [1.62] |
| 36 | 36 | B | 2.062–16 UNS | 54.7 [2.15] | 47.50 [1.87] |
| 36 | 36 | R | 2.062–20 UNS | 54.7 [2.15] | 47.50 [1.87] |
| 36 | 36 | C | 2.125–16 UN | 54.7 [2.15] | 47.50 [1.87] |
| 36 | 36 | A | 2.125–18 UNS | 54.7 [2.15] | 47.50 [1.87] |
| 36 | 36 | D | See * above. | 54.7 [2.15] | 47.50 [1.87] |
| 40 | 40 | B | 2.312–16 UNS | 60.6 [2.39] | 53.85 [2.12] |
| 40 | 40 | A, C, R | 2.375–16 UN | 60.6 [2.39] | 53.85 [2.12] |
| 40 | 40 | D | See * above. | 60.6 [2.39] | 53.85 [2.12] |
| 44 | 44 | – | 2.625–16 UN | 67.1 [2.64] | 60.20 [2.37] |
| 48 | 48 | C | 2.812–18 UNS | 73.5 [2.89] | 66.55 [2.62] |
| 48 | 48 | A, R | 2.875–16 UN | 73.5 [2.89] | 66.55 [2.62] |
| 48 | 48 | D | See * above. | 73.5 [2.89] | 66.55 [2.62] |

| Available in: | Americas | Europe | Asia Pacific |
|---|---|---|---|
| | ■ | ■ | ■ |



Catalog 1654025
Revised 3-13

www.te.com

Dimensions are shown for reference purposes only. Specifications subject to change.

Dimensions are in millimeters unless otherwise specified.

USA: +1 800 522 6752
Asia Pacific: +86 0 400 820 6015
UK: +44 800 267 666

For additional support numbers please visit www.te.com

## Code 18 MIL-C-5015 (MS3100) (Continued)

### Solid Adapters
(continued)

### Molded Part Selection Guide (Solid)

| Y Diameter | Standard K Parts | | | Low-Profile D Parts | | |
|---|---|---|---|---|---|---|
| | Straight Part No. | 90° Part No. | Cable OD (min.) | Straight Part No. | 90° Part No. | Cable OD (Min.) |
| 13.2 [0.52] | 202W232 | — | 4.3 [0.19] | — | — | — |
| 13.2 [0.52] | 202K121 | 222K121 | 5.6 [0.22] | 202D211 | 222D211 | 6.4 [0.25] |
| 15.0 [0.59] | 202K132 | 222K132 | 5.9 [0.23] | 202D221 | 222D221 | 7.4 [0.29] |
| 19.2 [0.76] | 202K142 | 222K142 | 7.1 [0.28] | 202D232 | 222D232 | 8.4 [0.33] |
| 20.9 [0.82] | 202K142 | 222K142 | 7.1 [0.28] | 202D232 | 222D232 | 8.4 [0.33] |
| 24.1 [0.95] | 202K153 | 222K152 | 8.4 [0.33] | 202D242 | 222D242 | 9.7 [0.38] |
| 26.1 [1.03] | 202K153 | 222K152 | 8.4 [0.33] | 202D242 | 222D242 | 9.7 [0.38] |
| 34.0 [1.34] | 202K163 | 222K163 | 9.9 [0.33] | 202D253 | 222D253 | 10.4 [0.41] |
| 36.2 [1.43] | 202K174 | 222K174 | 15.7 [0.62] | 202D263 | 222D263 | 12.2 [0.48] |
| 40.5 [1.59] | 202K174 | 222K174 | 15.7 [0.62] | 202D263 | 222D263 | 12.2 [0.48] |
| 43.0 [1.69] | 202K174 | 222K174 | 15.7 [0.62] | 202D263 | 222D263 | 12.2 [0.48] |
| 48.4 [1.91] | 202K185 | 222K185 | 16.8 [0.66] | 202D274 | 222D274 | 14.3 [0.56] |
| 54.7 [2.15] | 202K185 | 222K185 | 16.8 [0.66] | 202D274 | 222D274 | 14.3 [0.56] |
| 60.6 [2.39] | — | — | — | 202D285 | 222D285 | 17.5 [0.68] |
| 67.1 [2.64] | — | — | — | 202D296 | 222D296 | 19.6 [0.76] |
| 73.5 [2.89] | — | — | — | 202D299 | 222D299 | 22.9 [0.89] |

### Uniboot Parts

| Y Diameter | Part No. | Cable OD (Min.) |
|---|---|---|
| 13.2 [0.52] | 202C611 | 4.8 [0.19] |
| 15.0 [0.59] | 202C621 | 8.1 [0.32] |
| 19.3 [0.76] | 202C621 | 8.1 [0.32] |
| 20.9 [0.82] | 202C632 | 12.7 [0.50] |
| 24.1 [0.95] | 202C632 | 12.7 [0.50] |
| 26.1 [1.03] | 202C642 | 17.5 [0.69] |
| 34.0 [1.34] | 202C653 | 22.4 [0.88] |
| 36.3 [1.43] | 202C653 | 22.4 [0.88] |
| 40.5 [1.59] | 202C653 | 22.4 [0.88] |
| 43.0 [1.69] | 202C663 | 22.9 [0.90] |
| 48.4 [1.91] | 202C663 | 22.9 [0.90] |
| 54.7 [2.15] | 202C663 | 22.9 [0.90] |
| 60.6 [2.39] | 202C663 | 22.9 [0.90] |
| 67.1 [2.64] | 202C663 | 22.9 [0.90] |
| 73.5 [2.89] | 202C663 | 22.9 [0.90] |





Catalog 1654025
Revised 3-13

www.te.com

Dimensions are shown for reference purposes only. Specifications subject to change.

Dimensions are in millimeters unless otherwise specified.

USA: +1 800 522 6752
Asia Pacific: +86 0 400 820 6015
UK: +44 800 267 666

For additional support numbers please visit www.te.com

## Code 18 MIL-C-5015 (MS3100) (Continued)

### Spin-Coupling Adapters

| Manufacturer Code | Connector Manufacturer MS3100/3101/3106 |
|---|---|
| A | Amphenol-Class A |
| B | Bendix-Class A/E/R |
| C | Cannon-Class A/E/R |
| D* | Unknown-Class A/E/R |
| R | Amphenol-Class R |
| — | Manufacturer code not required |

*Additional pieces supplied when manufacturer is unknown.
All thread sizes for order number apply.

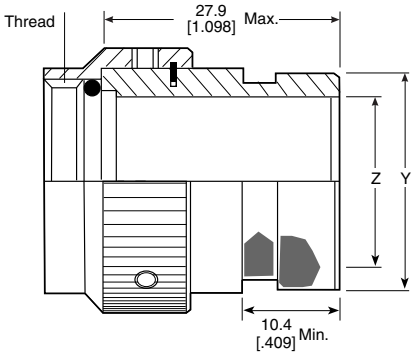


218M6XX-XXX

### Table of Dimensions

| Order No. | Shell Size | Manufacturer Code | Thread | Dimensions Y ±0.5 | Dimensions Z Min. |
|---|---|---|---|---|---|
| 08 | 8S | B | .375–32 UNEF | 13.2 [0.52] | 6.22 [0.24] |
| 08 | 8S | C | .438–28 UNEF | 13.2 [0.52] | 7.80 [0.31] |
| 08 | 8S | A, R | .438–27 UNS | 13.2 [0.52] | 7.80 [0.31] |
| 08 | 8S | D | See * above. | 13.2 [0.52] | 7.80 [0.31] |
| 10 | 10S | — | .500–28 UNEF | 15.0 [0.59] | 9.40 [0.37] |
| 11 | 10SL | C | .562–24 UNEF | 15.0 [0.59] | 11.00 [0.43] |
| 11 | 10SL | A, B, R | .625–24 UNEF | 19.3 [0.76] | 12.57 [0.49] |
| 11 | 10SL | D | See * above. | 19.3 [0.76] | 11.00 [0.43] |
| 12 | 12 & 12S | B, C | .625–24 UNEF | 19.3 [0.76] | 12.57 [0.49] |
| 12 | 12 & 12S | A, R | .688–24 UNEF | 19.3 [0.76] | 14.15 [0.56] |
| 12 | 12 & 12S | D | See * above. | 19.3 [0.76] | 12.57 [0.49] |
| 14 | 14 & 14S | — | .750–20 UNEF | 20.9 [0.82] | 15.75 [0.62] |
| 16 | 16 & 16S | — | .875–20 UNEF | 24.1 [0.95] | 18.92 [0.74] |
| 18 | 18 | — | 1.000 - 20 UNEF | 26.1 [1.03] | 20.50 [0.81] |
| 20 | 20 | A, B, C | 1.125–18 UNEF | 34.0 [1.34] | 25.27 [0.99] |
| 20 | 20 | R | 1.125–24 UNS | 34.0 [1.34] | 25.27 [0.99] |
| 20 | 20 | D | See * above. | 34.0 [1.34] | 25.27 [0.99] |
| 22 | 22 | — | 1.250–18 UNEF | 36.3 [1.43] | 28.45 [1.12] |
| 24 | 24 | — | 1.375–18 UNEF | 40.5 [1.59] | 31.62 [1.24] |
| 28 | 28 | — | 1.625–18 UNEF | 43.0 [1.69] | 34.80 [1.37] |
| 32 | 32 | B, C | 1.875–16 UN | 48.4 [1.91] | 41.15 [1.62] |
| 32 | 32 | A, R | 1.906–18 UN | 48.4 [1.91] | 41.15 [1.62] |
| 32 | 32 | D | See * above. | 48.4 [1.91] | 41.15 [1.62] |
| 36 | 36 | B | 2.062–16 UNS | 54.7 [2.15] | 47.50 [1.87] |
| 36 | 36 | R | 2.062–20 UNS | 54.7 [2.15] | 47.50 [1.87] |
| 36 | 36 | C | 2.125–16 UN | 54.7 [2.15] | 47.50 [1.87] |
| 36 | 36 | A | 2.125–18 UNS | 54.7 [2.15] | 47.50 [1.87] |
| 36 | 36 | D | See * above. | 54.7 [2.15] | 47.50 [1.87] |
| 40 | 40 | B | 2.312–16 UNS | 60.6 [2.39] | 53.85 [2.12] |
| 40 | 40 | A, C, R | 2.375–16 UN | 60.6 [2.39] | 53.85 [2.12] |
| 40 | 40 | D | See * above | 60.6 [2.39] | 53.85 [2.12] |
| 44 | 44 | – | 2.625–16 UN | 67.1 [2.64] | 60.20 [2.37] |
| 48 | 48 | C | 2.812–18 UNS | 73.5 [2.89] | 66.55 [2.62] |
| 48 | 48 | A, R | 2.875–16 UN | 73.5 [2.89] | 66.55 [2.62] |
| 48 | 48 | D | See * above | 73.5 [2.89] | 66.55 [2.62] |

| Available in: | Americas | Europe | Asia Pacific |
|---|---|---|---|
| | ■ | ■ | ■ |



Catalog 1654025
Revised 3-13

www.te.com

Dimensions are shown for reference purposes only. Specifications subject to change.

Dimensions are in millimeters unless otherwise specified.

USA: +1 800 522 6752
Asia Pacific: +86 0 400 820 6015
UK: +44 800 267 666

For additional support numbers please visit www.te.com

## Code 18 MIL-C-5015 (MS3100) (Continued)

### Molded Part Selection Guide (Spin-Coupling)

| Y Diameter | Standard K Parts | | | Low-Profile D Parts | | |
|---|---|---|---|---|---|---|
| | Straight Part No. | 90° Part No. | Cable OD (Min.) | Straight Part No. | 90° Part No. | Cable OD (Min.) |
| 13.2 [0.52] | | 202W232 | 4.3 [0.19] | | | |
| 13.2 [0.52] | 202K121 | 222K121 | 5.6 [0.22] | 202D211 | 222D211 | 6.4 [0.25] |
| 15.0 [0.59] | 202K132 | 222K132 | 5.9 [0.23] | 202D221 | 222D221 | 7.4 [0.29] |
| 19.2 [0.76] | 202K142 | 222K142 | 7.1 [0.28] | 202D232 | 222D232 | 8.4 [0.33] |
| 20.9 [0.82] | 202K142 | 222K142 | 7.1 [0.28] | 202D232 | 222D232 | 8.4 [0.33] |
| 24.1 [0.95] | 202K153 | 222K152 | 8.4 [0.33] | 202D242 | 222D242 | 9.7 [0.38] |
| 26.1 [1.03] | 202K153 | 222K152 | 8.4 [0.33] | 202D242 | 222D242 | 9.7 [0.38] |
| 34.0 [1.34] | 202K163 | 222K163 | 9.9 [0.33] | 202D253 | 222D253 | 10.4 [0.41] |
| 36.2 [1.43] | 202K174 | 222K174 | 15.7 [0.62] | 202D263 | 222D263 | 12.2 [0.48] |
| 40.5 [1.59] | 202K174 | 222K174 | 15.7 [0.62] | 202D263 | 222D263 | 12.2 [0.48] |
| 43.0 [1.69] | 202K174 | 222K174 | 15.7 [0.62] | 202D263 | 222D263 | 12.2 [0.48] |
| 48.4 [1.91] | 202K185 | 222K185 | 16.8 [0.66] | 202D274 | 222D274 | 14.3 [0.56] |
| 54.7 [2.15] | 202K185 | 222K185 | 16.8 [0.66] | 202D274 | 222D274 | 14.3 [0.56] |

### Uniboot Parts

| Y Diameter | Part No. | Cable OD (Min.) |
|---|---|---|
| 13.2 [0.52] | 202C611 | 4.8 [0.19] |
| 15.0 [0.59] | 202C621 | 8.1 [0.32] |
| 19.3 [0.76] | 202C621 | 8.1 [0.32] |
| 20.9 [0.82] | 202C632 | 12.7 [0.50] |
| 24.1 [0.95] | 202C632 | 12.7 [0.50] |
| 26.1 [1.03] | 202C642 | 17.5 [0.69] |
| 34.0 [1.34] | 202C653 | 22.4 [0.88] |
| 36.3 [1.43] | 202C653 | 22.4 [0.88] |
| 40.5 [1.59] | 202C653 | 22.4 [0.88] |
| 43.0 [1.69] | 202C663 | 22.9 [0.90] |
| 48.4 [1.91] | 202C663 | 22.9 [0.90] |
| 54.7 [2.15] | 202C663 | 22.9 [0.90] |





Catalog 1654025
Revised 3-13

www.te.com

Dimensions are shown for reference purposes only. Specifications subject to change.

Dimensions are in millimeters unless otherwise specified.

USA: +1 800 522 6752
Asia Pacific: +86 0 400 820 6015
UK: +44 800 267 666

For additional support numbers please visit www.te.com

## Code 18 MIL-C-5015 (MS3100) (Continued)

### Tinel-Lock Adapters

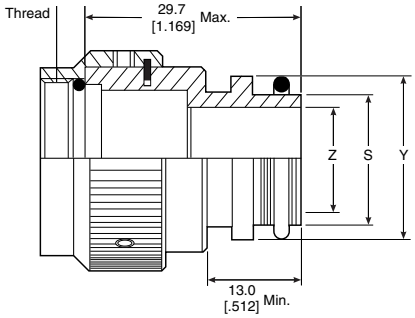


**TXR18XX00-XXXXXX**

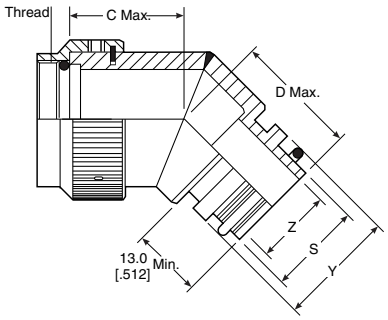


**TXR18XX45-XXXXXX**

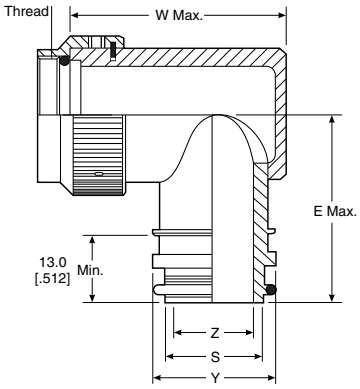


**TXR18XX90-XXXXXX**

| Manufacturer Code | Connector Manufacturer MS3100/3101/3106 |
|---|---|
| A | Amphenol-Class A |
| B | Bendix-Class A/E/R |
| C | Cannon-Class A/E/R |
| D* | Unknown-Class A/E/R |
| R | Amphenol-Class R |
| — | Manufacturer code not required |

*Additional pieces supplied when manufacturer is unknown.
All thread sizes for order number apply.

| Available in: | Americas | Europe | Asia Pacific |
|---|---|---|---|
| | ■ | ■ | ■ |



Catalog 1654025
Revised 3-13

www.te.com

Dimensions are shown for reference purposes only. Specifications subject to change.

Dimensions are in millimeters unless otherwise specified.

USA: +1 800 522 6752
Asia Pacific: +86 0 400 820 6015
UK: +44 800 267 666

For additional support numbers please visit www.te.com

## Code 18 MIL-C-5015 (MS3100) (Continued)

### Tinel-Lock Adapters
(continued)

### Table of Dimensions

| Order No. | Shell Size | Manufacturer Code | Max. Entry Size, Type 1** | Thread | Dimensions | | |
|---|---|---|---|---|---|---|---|
| | | | | | C Max. | D Max. | E Max. |
| 08 | 8S | B | 04 | .375-32 UNEF | 20.3 [0.80] | 23.4 [0.92] | 31.2 [1.23] |
| 08 | 8S | C | 04 | .438-28 UNEF | 20.3 [0.80] | 23.4 [0.92] | 31.2 [1.23] |
| 08 | 8S | A, R | 04 | .438-27 UNS | 20.3 [0.80] | 23.4 [0.92] | 31.2 [1.23] |
| 08 | 8S | D | 04 | * | 20.3 [0.80] | 23.4 [0.92] | 31.2 [1.23] |
| 10 | 10S | — | 06 | .500-28 UNEF | 21.1 [0.83] | 24.1 [0.95] | 31.2 [1.23] |
| 11 | 10SL | C | 07 | .562-24 UNEF | 21.1 [0.83] | 24.1 [0.83] | 31.2 [1.23] |
| 11 | 10SL | A, B, R | 07 | .625-24 UNEF | 21.1 [0.83] | 24.1 [0.95] | 31.2 [1.23] |
| 11 | 10SL | D | 07 | * | 21.1 [0.83] | 24.1 [0.95] | 31.2 [1.23] |
| 12 | 12 & 12S | B, C | 08 | .625-24 UNEF | 21.1 [0.83] | 24.1 [0.95] | 31.2 [1.23] |
| 12 | 12 & 12S | A, R | 08 | .688-24 UNEF | 21.8 [0.86] | 24.9 [0.98] | 33.0 [1.30] |
| 12 | 12 & 12S | D | 08 | * | 21.8 [0.86] | 24.9 [0.98] | 33.0 [1.30] |
| 14 | 14 & 14S | — | 10 | .750-20 UNEF | 21.8 [0.86] | 24.9 [0.98] | 33.0 [1.30] |
| 16 | 16 & 16S | — | 12 | .875-20 UNEF | 22.6 [0.89] | 25.9 [1.02] | 36.1 [1.42] |
| 18 | 18 | — | 12 | 1.000-20 UNEF | 23.4 [0.92] | 26.7 [1.05] | 37.6 [1.48] |
| 20 | 20 | A, B, C | 16 | 1.125-18 UNEF | 24.1 [0.95] | 27.4 [1.08] | 39.4 [1.55] |
| 20 | 20 | R | 16 | 1.125-24 UNS | 24.1 [0.95] | 27.4 [1.08] | 39.4 [1.55] |
| 20 | 20 | D | 16 | * | 24.1 [0.95] | 27.4 [1.08] | 39.4 [1.55] |
| 22 | 22 | — | 18 | 1.250-18 UNEF | 24.9 [0.98] | 28.2 [1.11] | 40.9 [1.61] |
| 24 | 24 | — | 20 | 1.375-18 UNEF | 24.9 [0.98] | 28.2 [1.11] | 42.4 [1.67] |
| 28 | 28 | — | 22 | 1.625-18 UNEF | 27.4 [1.08] | 29.7 [1.17] | 47.2 [1.86] |
| 32 | 32 | B, C | 24 | 1.875-16 UN | 28.2 [1.11] | 31.2 [1.23] | 48.8 [1.92] |
| 32 | 32 | A, R | 24 | 1.906-18 UN | 28.2 [1.11] | 31.2 [1.23] | 48.8 [1.92] |
| 32 | 32 | D | 24 | * | 28.2 [1.11] | 31.2 [1.23] | 48.8 [1.92] |
| 36 | 36 | B | 24 | 2.062-16 UNS | 31.2 [1.23] | 32.3 [1.27] | 52.1 [2.05] |
| 36 | 36 | R | 24 | 2.062-20 UNS | 31.2 [1.23] | 32.3 [1.27] | 52.1 [2.05] |
| 36 | 36 | C | 24 | 2.125-16 UN | 31.2 [1.23] | 32.3 [1.27] | 52.1 [2.05] |
| 36 | 36 | A | 24 | 2.125-18 UNS | 31.2 [1.23] | 32.3 [1.27] | 52.1 [2.05] |
| 36 | 36 | D | 24 | * | 31.2 [1.23] | 32.3 [1.27] | 52.1 [2.05] |
| 40 | 40 | B | 24 | 2.312-16 UNS | 32.3 [1.27] | 33.0 [1.30] | 55.1 [2.17] |
| 40 | 40 | A, C, R | 24 | 2.375-16 UN | 32.3 [1.27] | 33.0 [1.30] | 55.1 [2.17] |
| 40 | 40 | D | 24 | * | 32.3 [1.27] | 33.0 [1.30] | 55.1 [2.17] |
| 44 | 44 | — | 24 | 2.625-16 UN | 34.0 [1.34] | 34.5 [1.36] | 61.5 [2.42] |
| 48 | 48 | C | 24 | 2.812-18 UNS | 34.0 [1.34] | 34.5 [1.36] | 61.5 [2.42] |
| 48 | 48 | A, R | 24 | 2.875-16 UN | 34.0 [1.34] | 34.5 [1.36] | 61.5 [2.42] |
| 48 | 48 | D | 24 | * | 34.0 [1.34] | 34.5 [1.36] | 61.5 [2.42] |

* Additional pieces, etc. (from page 6-36)
**For larger than maximum type 1 entry sizes, a two-piece adapter will be supplied. Contact TE for information.







Dimensions are shown for reference purposes only. Specifications subject to change.

Dimensions are in millimeters unless otherwise specified.

USA: +1 800 522 6752
Asia Pacific: +86 0 400 820 6015
UK: +44 800 267 666

For additional support numbers please visit www.te.com

## Code 18 MIL-C-5015 (MS3100) (Continued)

### Tinel-Lock Adapters
(continued)

### Entry Size Dimensions

| Entry Size | Dimensions | | | |
|---|---|---|---|---|
| | Z Dia. +0.25–0.5 | S Diameter (min.–max.) | Y Dia. ±0.38 | W Max. |
| 04 | 6.35 [0.25] | 9.39–9.56 [0.37–0.38] | 13.97 [0.55] | 31.50 [1.24] |
| 05 | 7.92 [0.31] | 10.97–11.13 [0.43–0.44] | 15.54 [0.61] | 34.30 [1.35] |
| 06 | 9.52 [0.37] | 12.57–12.73 [0.49–0.50] | 17.14 [0.67] | 35.80 [1.41] |
| 07 | 11.09 [0.44] | 14.12–14.31 [0.55–0.56] | 18.71 [0.74] | 37.30 [1.47] |
| 08 | 12.70 [0.50] | 15.72–15.91 [0.62–0.63] | 20.32 [0.80] | 39.10 [1.54] |
| 10 | 15.87 [0.62] | 18.84–19.11 [0.74–0.75] | 23.49 [0.92] | 41.40 [1.63] |
| 12 | 19.05 [0.75] | 22.02–22.28 [0.87–0.88] | 26.67 [1.05] | 45.50 [1.79] |
| 14 | 22.23 [0.88] | 25.17–25.46 [0.99–1.00] | 29.84 [1.17] | 48.80 [1.92] |
| 16 | 25.40 [1.00] | 28.34–28.63 [1.12–1.13] | 33.02 [1.30] | 51.80 [2.04] |
| 18 | 28.57 [1.12] | 31.52–31.81 [1.24–1.25] | 36.19 [1.42] | 54.90 [2.16] |
| 20 | 31.75 [1.25] | 34.69–34.98 [1.37–1.38] | 39.37 [1.55] | 58.20 [2.29] |
| 22 | 34.93 [1.38] | 37.79–38.15 [1.49–1.50] | 42.55 [1.68] | 66.80 [2.63] |
| 24 | 38.10 [1.50] | 40.97–41.33 [1.61–1.63] | 45.72 [1.80] | 70.10 [2.76] |

### Molded Part Selection Guide (Tinel)

| Tinel-Lock Entry Size | Standard K Parts | | | Low-Profile D Parts | | |
|---|---|---|---|---|---|---|
| | Straight Part No. | 90° Part No. | Cable OD (min.) | Straight Part No. | 90° Part No. | Cable OD (Min.) |
| 04 | 202K232 | — | 3.30 [0.13] | — | — | — |
| 04 | 202W232 | — | 4.30 [0.19] | — | — | — |
| 04 | 202K121 | 222K121 | 5.60 [0.22] | 202D211 | 222D211 | 6.40 [0.25] |
| 05, 06 | 202K132 | 222K132 | 5.90 [0.23] | 202D221 | 222D221 | 7.40 [0.29] |
| 07, 08 | 202K142 | 222K142 | 7.10 [0.28] | 202D232 | 222D232 | 8.40 [0.33] |
| 10, 12 | 202K153 | 222K152 | 8.40 [0.33] | 202D242 | 222D242 | 9.70 [0.38] |
| 14, 16 | 202K163 | 222K163 | 9.90 [0.39] | 202D253 | 222D253 | 10.50 [0.41] |
| 18, 20, 22 | 202K174 | 222K174 | 15.70 [0.62] | 202D263 | 222D263 | 12.20 [0.48] |
| 24 | 202K185 | 222K185 | 16.80 [0.66] | — | — | — |

### Uniboot Parts

| Tinel-Lock Entry Size | Part No. | Cable OD (min.) |
|---|---|---|
| 04 | 202C611 | 4.8 [0.19] |
| 05, 06, 07 | 202C621 | 8.1 [0.32] |
| 08, 10, 12 | 202C632 | 12.7 [0.50] |
| 12, 14, 16 | 202C642 | 17.5 [0.69] |
| 16, 18, 20, 22 | 202C653 | 22.4 [0.88] |



Dimensions are shown for reference purposes only. Specifications subject to change.

Dimensions are in millimeters unless otherwise specified.

USA: +1 800 522 6752
Asia Pacific: +86 0 400 820 6015
UK: +44 800 267 666

For additional support numbers please visit www.te.com

## Code 21 MIL-C-26482 Series 1

### Braided Adapters

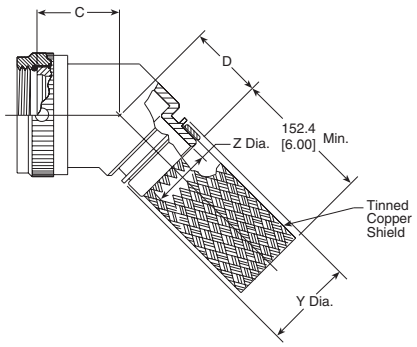


206M1XX-XXXXX

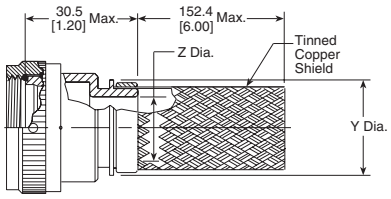


206M0XX-XXXXX

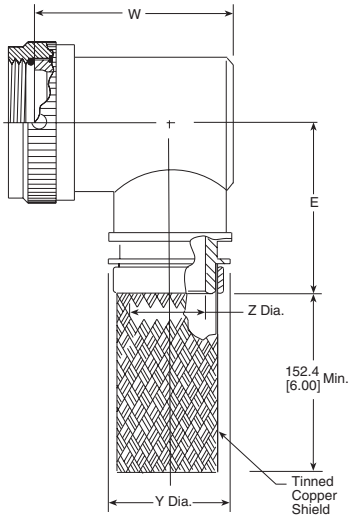


206M2XX-XXXXX

### Table of Dimensions

| Order No. | Shell Size | Max. Entry Size, Type 1* | Thread | Dimensions | | |
|---|---|---|---|---|---|---|
| | | | | C Max. | D Max. | E Max. |
| 08 | 8 | 04 | .438-28 UNEF | 21.6 [0.85] | 23.1 [0.91] | 29.0 [1.14] |
| 10 | 10 | 06 | .562-24 UNEF | 22.4 [0.88] | 23.9 [0.94] | 30.5 [1.20] |
| 12 | 12 | 08 | .688-24 UNEF | 23.1 [0.91] | 24.6 [0.97] | 32.3 [1.27] |
| 14 | 14 | 10 | .812-20 UNEF | 23.4 [0.92] | 24.9 [0.98] | 33.5 [1.32] |
| 16 | 16 | 12 | .938-20 UNEF | 24.1 [0.95] | 25.7 [1.01] | 34.8 [1.37] |
| 18 | 18 | 12 | 1.062-18 UNEF | 24.4 [0.96] | 25.9 [1.02] | 36.3 [1.43] |
| 20 | 20 | 14 | 1.188-18 UNEF | 25.1 [0.99] | 26.7 [1.05] | 38.1 [1.50] |
| 22 | 22 | 16 | 1.312-18 UNEF | 25.7 [1.01] | 27.4 [1.08] | 39.6 [1.56] |
| 24 | 24 | 18 | 1.438-18 UNEF | 26.2 [1.03] | 27.7 [1.09] | 40.9 [1.61] |

*For larger than maximum type 1 entry sizes, a two-piece adapter will be supplied. Contact TE for information.

### Entry Size Dimensions

| Entry Size | Dimensions | | |
|---|---|---|---|
| | Z +0.25–0.5 | Y Dia. | W Max. |
| 04 | 6.35 [0.25] | 13.97 [0.55] | 31.0 [1.22] |
| 05 | 7.92 [0.31] | 15.54 [0.61] | 32.8 [1.29] |
| 06 | 9.52 [0.37] | 17.14 [0.67] | 34.3 [1.35] |
| 07 | 11.09 [0.44] | 18.71 [0.74] | 35.8 [1.41] |
| 08 | 12.70 [0.50] | 20.32 [0.80] | 37.3 [1.47] |
| 10 | 15.87 [0.62] | 23.49 [0.92] | 40.6 [1.60] |
| 12 | 19.05 [0.75] | 26.67 [1.05] | 43.7 [1.72] |
| 14 | 22.23 [0.88] | 29.84 [1.17] | 47.0 [1.85] |
| 16 | 25.40 [1.00] | 33.02 [1.30] | 50.0 [1.97] |
| 18 | 28.57 [1.12] | 36.19 [1.42] | 53.3 [2.10] |

| Available in: | Americas | Europe | Asia Pacific |
|---|---|---|---|
| | ■ | ■ | ■ |





Catalog 1654025
Revised 3-13

www.te.com

Dimensions are shown for reference purposes only. Specifications subject to change.

Dimensions are in millimeters unless otherwise specified.

USA: +1 800 522 6752
Asia Pacific: +86 0 400 820 6015
UK: +44 800 267 666

For additional support numbers please visit www.te.com

## Code 21 MIL-C-26482 Series 1 (Continued)

### Solid Adapters

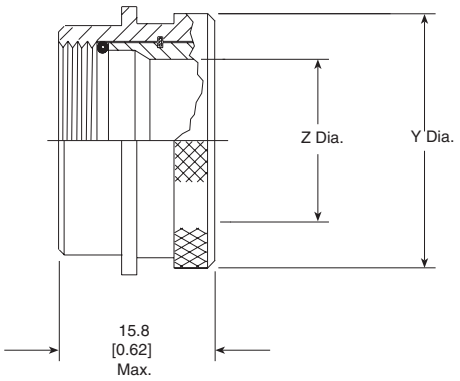


**203M6XX-XXX**

### Table of Dimensions

| Order Number | Shell Size | Thread | Dimensions | |
|---|---|---|---|---|
| | | | Y +0.000-0.030 (+0.00) (-0.76) Dia. | Z Min. |
| 08 | 8 | .438-28 UNEF | 17.88 [0.704] | 6.63 [0.26] |
| 10 | 10 | .562-24 UNEF | 21.06 [0.829] | 9.27 [0.36] |
| 12 | 12 | .688-24 UNEF | 24.23 [0.954] | 12.98 [0.51] |
| 14 | 14 | .812-20 UNEF | 27.41 [1.079] | 15.37 [0.61] |
| 16 | 16 | .938-20 UNEF | 31.85 [1.254] | 18.54 [0.73] |
| 18 | 18 | 1.062-18 UNEF | 33.03 [1.316] | 20.90 [0.82] |
| 20 | 20 | 1.188-18 UNEF | 36.63 [1.442] | 24.10 [0.95] |
| 22 | 22 | 1.312-18 UNEF | 39.78 [1.566] | 27.28 [1.07] |
| 24 | 24 | 1.438-18 UNEF | 42.98 [1.692] | 29.67 [1.17] |

### Molded Part Selection Guide (Solid)

| Order No. | Standard K Parts | | | Low-Profile D Parts | | |
|---|---|---|---|---|---|---|
| | Straight Part No. | 90° Part No. | Cable OD (Min.) | Straight Part No. | 90° Part No. | Cable OD (Min.) |
| 08 | 202K132 | 222K132 | 5.9 [0.23] | 202D221 | 222D221 | 7.4 [0.29] |
| 10 | 202K142 | 222K142 | 7.1 [0.28] | 202D232 | 222D232 | 8.4 [0.33] |
| 12, 14 | 202K153 | 222K152 | 8.4 [0.33] | 202D242 | 222D242 | 9.7 [0.38] |
| 16, 18 | 202K163 | 222K163 | 9.9 [0.39] | 202D253 | 222D253 | 10.5 [0.41] |
| 20, 22, 24 | 202K174 | 222K174 | 15.7 [0.62] | 202D263 | 222D263 | 12.2 [0.48] |

### Uniboot Parts

| Order No. | Part No. | Cable OD (Min.) |
|---|---|---|
| 08 | 202C621 | 8.1 [0.32] |
| 10 | 202C632 | 12.7 [0.50] |
| 12, 14 | 202C642 | 17.5 [0.69] |
| 16, 18, 20, 22, 24 | 202C653 | 22.4 [0.88] |

| Available in: | Americas | Europe | Asia Pacific |
|---|---|---|---|
| | ■ | ■ | ■ |



Catalog 1654025
Revised 3-13

www.te.com

Dimensions are shown for reference purposes only. Specifications subject to change.

Dimensions are in millimeters unless otherwise specified.

USA: +1 800 522 6752
Asia Pacific: +86 0 400 820 6015
UK: +44 800 267 666

For additional support numbers please visit www.te.com

## Code 21 MIL-C-26482 Series 1 (Continued)

### Spin-Coupling Adapters

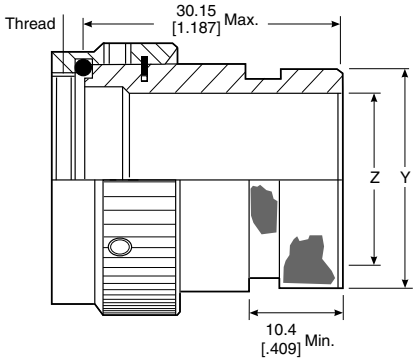


**203M9XX-XXX**

### Table of Dimensions

| Order No. | Shell Size | Thread | Dimensions | |
|---|---|---|---|---|
| | | | Y +0.00–0.76 Dia. | Z Min. |
| 08 | 8 | .438-28 UNEF | 13.54 [0.53] | 6.63 [0.26] |
| 10 | 10 | .562-24 UNEF | 15.37 [0.61] | 9.27 [0.36] |
| 12 | 12 | .688-24 UNEF | 19.66 [0.77] | 12.98 [0.51] |
| 14 | 14 | .812-20 UNEF | 21.29 [0.84] | 15.37 [0.61] |
| 16 | 16 | .938-20 UNEF | 24.46 [0.96] | 18.54 [0.73] |
| 18 | 18 | 1.062-18 UNEF | 26.47 [1.04] | 20.90 [0.82] |
| 20 | 20 | 1.188-18 UNEF | 30.91 [1.22] | 24.10 [0.95] |
| 22 | 22 | 1.312-18 UNEF | 34.42 [1.36] | 27.28 [1.07] |
| 24 | 24 | 1.438-18 UNEF | 36.65 [1.44] | 29.67 [1.17] |

### Molded Part Selection Guide (Spin-Coupling)

| Order No. | Standard K Parts | | | Low-profile D Parts | | |
|---|---|---|---|---|---|---|
| | Straight Part No. | 90° Part No. | Cable OD (Min.) | Straight Part No. | 90° Part No. | Cable OD (Min.) |
| 08 | 202W232 | — | 4.3 [0.19] | — | — | — |
| 08 | 202K121 | 222K121 | 5.6 [0.22] | 202D211 | 222D211 | 6.4 [0.25] |
| 10 | 202K132 | 222K132 | 5.9 [0.23] | 202D221 | 222D221 | 7.4 [0.29] |
| 12, 14 | 202K142 | 222K142 | 7.1 [0.28] | 202D232 | 222D232 | 8.4 [0.33] |
| 16, 18 | 202K153 | 222K152 | 8.4 [0.33] | 202D242 | 222D242 | 9.7 [0.38] |
| 20, 22 | 202K163 | 222K163 | 9.9 [0.39] | 202D253 | 222D253 | 10.5 [0.41] |
| 24 | 202K174 | 222K174 | 15.7 [0.62] | 202D263 | 222D263 | 12.2 [0.48] |

### Uniboot Parts

| Order No. | Part No. | Cable OD (Min.) |
|---|---|---|
| 08 | 202C611 | 4.8 [0.19] |
| 10, 12 | 202C621 | 8.1 [0.32] |
| 14, 16 | 202C632 | 12.7 [0.50] |
| 18, 20 | 202C642 | 17.5 [0.69] |
| 22, 24 | 202C653 | 22.4 [0.88] |

| Available in: | Americas | Europe | Asia Pacific |
|---|---|---|---|
| | ■ | ■ | ■ |







Dimensions are shown for reference purposes only. Specifications subject to change.

Dimensions are in millimeters unless otherwise specified.

USA: +1 800 522 6752
Asia Pacific: +86 0 400 820 6015
UK: +44 800 267 666

For additional support numbers please visit www.te.com

## Code 21 MIL-C-26482 Series 1 (Continued)

### Tinel-Lock Adapters

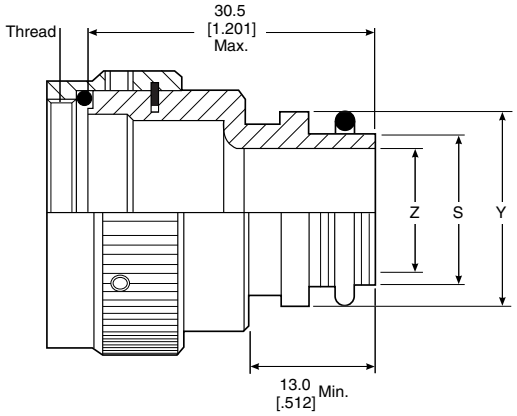


**TXR21XX00-XXXX XX**

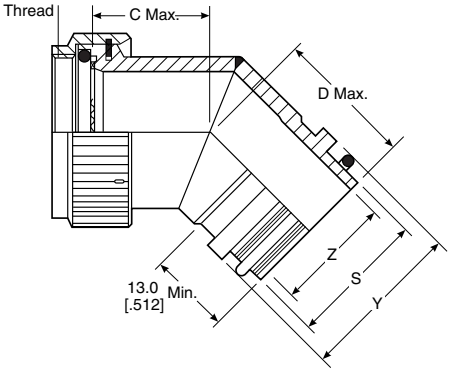


**TXR21XX45-XXXXXX**

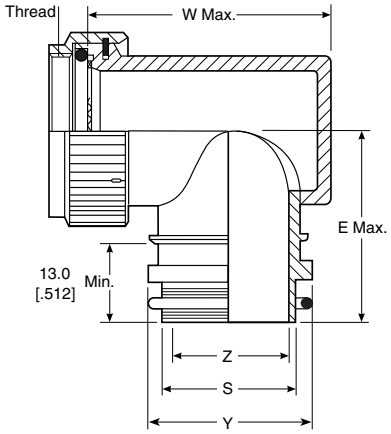


**TXR21XX90-XXXXXX**

| Available in: | Americas | Europe | Asia Pacific |
|---|---|---|---|
| | ■ | ■ | ■ |



Catalog 1654025
Revised 3-13

www.te.com

Dimensions are shown for reference purposes only. Specifications subject to change.

Dimensions are in millimeters unless otherwise specified.

USA: +1 800 522 6752
Asia Pacific: +86 0 400 820 6015
UK: +44 800 267 666

For additional support numbers please visit www.te.com

## Code 21 MIL-C-26482 Series 1 (Continued)

### Tinel-Lock Adapters
(continued)

### Table of Dimensions

| Order No. | Shell Size | Max. Entry Size, Type 1* | Thread | Dimensions | | |
|---|---|---|---|---|---|---|
| | | | | C Max. | D Max. | E Max. |
| 08 | 8 | 04 | .438-28 UNEF | 21.6 [0.85] | 23.1 [0.91] | 29.0 [1.14] |
| 10 | 10 | 06 | .562-24 UNEF | 22.4 [0.88] | 23.9 [0.94] | 30.5 [1.20] |
| 12 | 12 | 08 | .688-24 UNEF | 23.1 [0.91] | 24.6 [0.97] | 32.3 [1.27] |
| 14 | 14 | 10 | .812-20 UNEF | 23.4 [0.92] | 24.9 [0.98] | 33.5 [1.32] |
| 16 | 16 | 12 | .938-20 UNEF | 24.1 [0.95] | 25.7 [1.01] | 34.8 [1.37] |
| 18 | 18 | 12 | 1.062-18 UNEF | 24.4 [0.96] | 25.9 [1.02] | 36.3 [1.43] |
| 20 | 20 | 14 | 1.188-18 UNEF | 25.1 [0.99] | 26.7 [1.05] | 38.1 [1.50] |
| 22 | 22 | 16 | 1.312-18 UNEF | 25.7 [1.01] | 27.4 [1.08] | 39.6 [1.56] |
| 24 | 24 | 18 | 1.438-18 UNEF | 26.2 [1.03] | 27.7 [1.09] | 40.9 [1.61] |

*For larger than maximum type 1 entry sizes, a two-piece adapter will be supplied. Contact TE for information.

### Entry Size Dimensions

| Entry Size | Dimensions | | | |
|---|---|---|---|---|
| | Z +0.25–0.5 | S Diameter(Min.–Max.) | Y Dia. | W Max. |
| 04 | 6.35 [0.25] | 9.39–9.56 [0.37–0.38] | 13.97 [0.55] | 31.0 [1.22] |
| 05 | 7.92 [0.31] | 10.97–11.13 [0.43–0.44] | 15.54 [0.61] | 32.8 [1.29] |
| 06 | 9.52 [0.37] | 12.57–12.73 [0.49–0.50] | 17.14 [0.67] | 34.3 [1.35] |
| 07 | 11.09 [0.44] | 14.12–14.31 [0.55–0.56] | 18.71 [0.74] | 35.8 [1.41] |
| 08 | 12.7 [0.50] | 15.72–15.91 [0.62–0.63] | 20.32 [0.80] | 37.3 [1.47] |
| 10 | 15.87 [0.62] | 18.84–19.11 [0.74–0.75] | 23.49 [0.92] | 40.6 [1.60] |
| 12 | 19.05 [0.75] | 22.02–22.28 [0.87–0.88] | 26.67 [1.05] | 43.7 [1.72] |
| 14 | 22.23 [0.88] | 25.17–25.46 [0.99–1.00] | 29.84 [1.17] | 47.0 [1.85] |
| 16 | 25.4 [1.00] | 28.34–28.63 [1.12–1.13] | 33.02 [1.30] | 50.0 [1.97] |
| 18 | 28.57 [1.12] | 31.52–31.81 [1.24–1.25] | 36.19 [1.42] | 53.3 [2.10] |

### Molded Part Selection Guide (Tinel)

| Tinel-Lock Entry Size | Standard K Parts | | | Low-profile D Parts | | |
|---|---|---|---|---|---|---|
| | Straight Part No. | 90° Part No. | Cable OD (Min.) | Straight Part No. | 90° Part No. | Cable OD (Min.) |
| 04 | 202K232 | — | 3.3 [0.1] | — | — | — |
| 04 | 202W232 | — | 4.3 [0.2] | — | — | — |
| 04 | 202K121 | 222K121 | 5.6 [0.2] | 202D211 | 222D211 | 6.4 [0.3] |
| 05, 06 | 202K132 | 222K132 | 5.9 [0.2] | 202D221 | 222D221 | 7.4 [0.3] |
| 07, 08 | 202K142 | 222K142 | 7.1 [0.3] | 202D232 | 222D232 | 8.4 [0.3] |
| 10, 12 | 202K153 | 222K152 | 8.4 [0.3] | 202D242 | 222D242 | 9.7 [0.4] |
| 14, 16 | 202K163 | 222K163 | 9.9 [0.4] | 202D253 | 222D253 | 10.5 [0.4] |
| 18, 20, 22 | 202K174 | 222K174 | 15.7 [0.6] | 202D263 | 222D263 | 12.2 [0.5] |
| 24 | 202K185 | 222K185 | 16.8 [0.7] | — | — | — |

### Uniboot Parts

| Tinel-Lock Entry Size | Part No. | Cable OD (Min.) |
|---|---|---|
| 04 | 202C611 | 4.8 [0.19] |
| 05, 06, 07 | 202C621 | 8.1 [0.32] |
| 08, 10, 12 | 202C632 | 12.7 [0.50] |
| 12, 14, 16 | 202C642 | 17.5 [0.69] |
| 16, 18, 20, 22 | 202C653 | 22.4 [0.88] |
| 24 | 202C663 | 22.9 [0.90] |





Catalog 1654025
Revised 3-13

www.te.com

Dimensions are shown for reference purposes only. Specifications subject to change.

Dimensions are in millimeters unless otherwise specified.

USA: +1 800 522 6752
Asia Pacific: +86 0 400 820 6015
UK: +44 800 267 666

For additional support numbers please visit www.te.com

## Code 21 MIL-C-26482 Series 1 (Continued)

### CRES-Lock Adapters (USA)
### BND Adapters (Europe)

### Code 21 Band Strap Adapter

**Notes:**
1. This product is designed to terminate a braided cable shield by means of a band strap and a heat shrinkable lipped boot to a connector.
2. See CH00-0250-016 for ordering information, modifications and additional dimensions.
3. See drawing BND-XX25S for band strap dimensions and information.
4. Adapter to be permanently marked with code identification number and full part number (e.g. 06090-BND21AB00-1812). Band strap shall bear no part marking.
5. All entry sizes are shown in Table II. Maximum entry sizes are as shown in Table I. For larger entry sizes than the maximum, a Type II adapter may be supplied. See CH00-0250-016 for further details.
6. Adapter mates to: MIL-C-26482 Series I, MS3110, MS3116, MS3120 and MS3126 Class E and F Connectors.
7. Anti-rotational set screw, 3 threaded holes 120° ± 5° apart, single mating set screw supplied: AN565DC4H2. Not required for Type II adapters.

**For additional codes available, contact TE.**

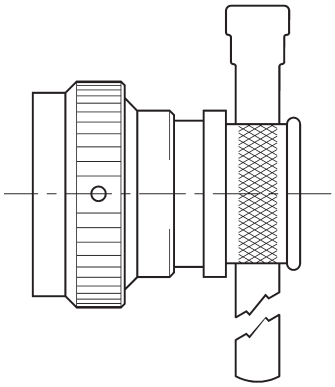

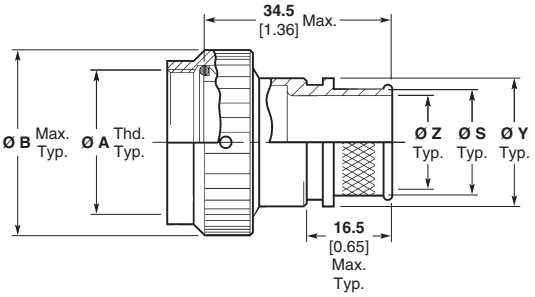


**Straight Adapter**
**Code 00**

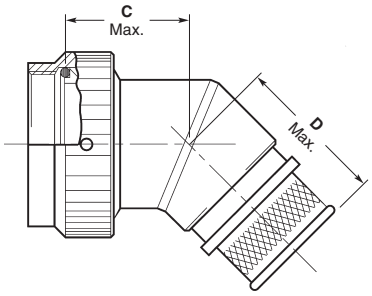


**45° Adapter**
**Code 45**

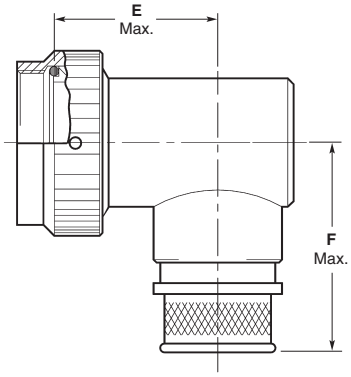


**90° Adapter**
**Code 90**

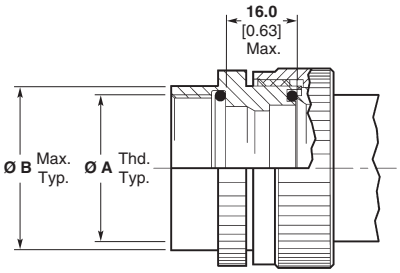


**Type II Modification**
**(See Note 5)**

| Available in: | Americas | Europe | Asia Pacific |
|---|---|---|---|
| | ■ | ■ | ■ |



Catalog 1654025
Revised 3-13

www.te.com

Dimensions are shown for reference purposes only. Specifications subject to change.

Dimensions are in millimeters unless otherwise specified.

USA: +1 800 522 6752
Asia Pacific: +86 0 400 820 6015
UK: +44 800 267 666

For additional support numbers please visit www.te.com

## Code 21 MIL-C-26482 Series 1 (Continued)

### CRES-Lock Adapters (USA) BND Adapters (Europe) (continued)

### Code 21 Band Strap Adapter (Continued)

**Table I**

| Order Number | Shell Size[2] | Entry Size Max. Type I[1] | Ø A Unified Thread UNEF Class 2B | Ø B Max. | C Max. | D Max. | F Max. |
|---|---|---|---|---|---|---|---|
| 08 | 08 | 04 | 0.4375–28 | **18.3** 0.72 | **21.6** 0.85 | **27.2** 1.07 | **33.0** 1.30 |
| 10 | 10 | 06 | 0.5625–24 | **21.6** 0.85 | **22.4** 0.88 | **27.9** 1.10 | **34.5** 1.36 |
| 12 | 12 | 08 | 0.6875–24 | **24.9** 0.98 | **23.1** 0.91 | **28.7** 1.13 | **36.3** 1.43 |
| 14 | 14 | 10 | 0.8125–20 | **28.2** 1.11 | **23.4** 0.92 | **29.0** 1.14 | **37.6** 1.48 |
| 16 | 16 | 12 | 0.9375–20 | **31.2** 1.23 | **24.1** 0.95 | **29.7** 1.17 | **38.9** 1.53 |
| 18 | 18 | 13 | 1.0625–18 | **34.5** 1.36 | **24.4** 0.96 | **30.0** 1.18 | **40.4** 1.59 |
| 20 | 20 | 15 | 1.1875–18 | **37.6** 1.48 | **25.1** 0.99 | **30.7** 1.21 | **42.2** 1.66 |
| 22 | 22 | 16 | 1.3125–18 | **40.6** 1.60 | **25.7** 1.01 | **31.5** 1.24 | **43.7** 1.72 |
| 24 | 24 | 18 | 1.4375–18 | **43.2** 1.70 | **26.2** 1.03 | **31.8** 1.25 | **45.0** 1.77 |

1. All entry sizes are shown in Table II. Maximum entry sizes are as shown in Table I. For larger entry sizes than the maximum, a Type II adapter may be supplied. See CH00-0250-016 for further details.
2. Adapter mates to: MIL-C-26482 Series I, MS3110, MS3116, MS3120 and MS3126 Class E and F Connectors.

**Table II**

| Entry Size | Ø Z +0.25/-0.50 [+0.010/-0.020] | Ø S ±0.51 [±0.020] | Ø Y ±0.38 [±0.015] | E Max. |
|---|---|---|---|---|
| 03 | **4.75** 0.188 | **7.92** 0.312 | **11.10** 0.438 | **19.0** 0.75 |
| 04 | **6.35** 0.250 | **9.52** 0.375 | **12.70** 0.500 | **19.8** 0.78 |
| 05 | **7.92** 0.312 | **11.12** 0.438 | **14.30** 0.563 | **20.1** 0.79 |
| 06 | **9.52** 0.375 | **12.70** 0.500 | **15.88** 0.625 | **21.1** 0.83 |
| 07 | **11.12** 0.438 | **14.30** 0.562 | **17.50** 0.689 | **21.6** 0.85 |
| 08 | **12.70** 0.500 | **15.88** 0.625 | **19.05** 0.750 | **22.6** 0.89 |
| 09 | **14.30** 0.562 | **17.50** 0.688 | **20.65** 0.813 | **23.6** 0.93 |
| 10 | **15.88** 0.625 | **19.05** 0.750 | **22.23** 0.875 | **24.4** 0.96 |
| 11 | **17.50** 0.688 | **20.65** 0.812 | **23.80** 0.938 | **24.9** 0.98 |
| 12 | **19.05** 0.750 | **22.23** 0.875 | **25.40** 1.000 | **25.9** 1.02 |
| 13 | **20.65** 0.812 | **23.83** 0.938 | **27.00** 1.063 | **26.7** 1.05 |
| 14 | **22.23** 0.875 | **25.40** 1.000 | **30.16** 1.189 | **27.4** 1.08 |

**Table II** (Continued)

| Entry Size | Ø Z +0.25/-0.50 [+0.010/-0.020] | Ø S ±0.51 [±0.020] | Ø Y ±0.38 [±0.015] | E Max. |
|---|---|---|---|---|
| 15 | **23.83** .0938 | **27.00** 1.062 | **31.75** 1.250 | **28.2** 1.11 |
| 16 | **25.40** 1.000 | **28.58** 1.125 | **33.34** 1.313 | **29.0** 1.14 |
| 18 | **28.58** 1.125 | **31.75** 1.250 | **36.51** 1.438 | **30.5** 1.20 |
| 20 | **31.75** 1.250 | **34.90** 1.375 | **39.69** 1.563 | N/A |
| 22 | **34.90** 1.375 | **38.10** 1.500 | **42.86** 1.688 | N/A |
| 24 | **38.10** 1.500 | **41.28** 1.625 | **46.83** 1.844 | N/A |
| 26 | **41.28** 1.625 | **44.45** 1.750 | **49.61** 1.953 | N/A |
| 28 | **44.45** 1.750 | **47.63** 1.875 | **52.78** 2.078 | N/A |
| 30 | **47.65** 1.875 | **50.80** 2.000 | **56.36** 2.219 | N/A |
| 32 | **50.80** 2.000 | **54.00** 2.125 | **59.53** 2.344 | N/A |
| 34 | **54.00** 2.125 | **57.15** 2.250 | **62.71** 2.469 | N/A |

## Code 32 MIL-C-22992

### Braided Adapters

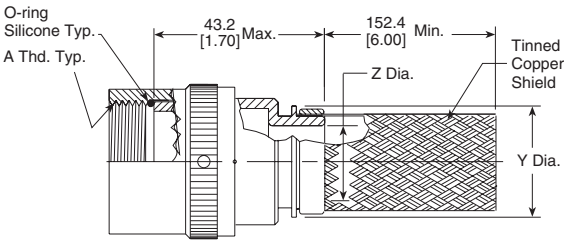


**207M3XX-XXXXX**

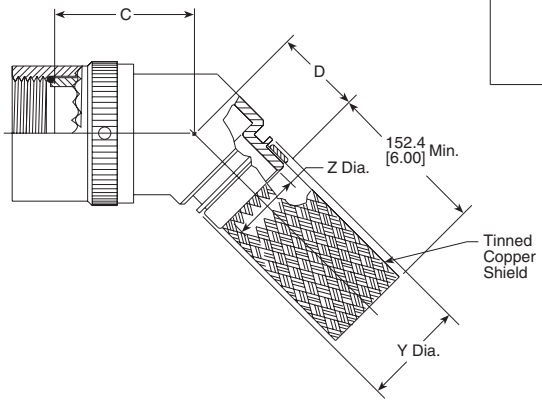


**212M4XX-XXXXX**

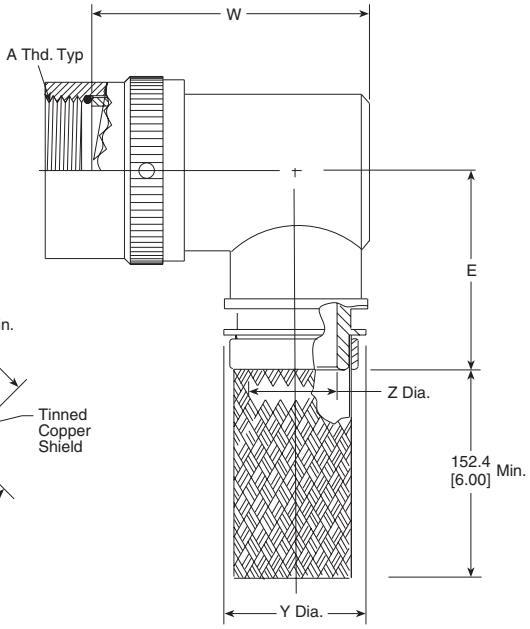


**212M5XX-XXXXX**

| Available in: | Americas | Europe | Asia Pacific |
|---|---|---|---|
| | ■ | ■ | ■ |



Catalog 1654025
Revised 3-13

www.te.com

Dimensions are shown for reference purposes only. Specifications subject to change.

Dimensions are in millimeters unless otherwise specified.

USA: +1 800 522 6752
Asia Pacific: +86 0 400 820 6015
UK: +44 800 267 666

For additional support numbers please visit www.te.com

## Code 32 MIL-C-22992 (Continued)

### Braided Adapters
(continued)

### Table of Dimensions

| Order No. | Shell Size | Max. Entry Size, Type 1* | A Left Hand Thd. Class 2B | Dimensions | | |
|---|---|---|---|---|---|---|
| | | | | C Max. | D Max. | E Max |
| 12 | 12 | 08 | .750-20 UNEF | 29.0 [1.14] | 25.4 [1.00] | 33.5 [1.32] |
| 14 | 14 | 10 | .875-20 UNEF | 29.7 [1.17] | 25.9 [1.02] | 35.3 [1.39] |
| 16 | 16 | 12 | 1.000-20 UNEF | 30.0 [1.18] | 26.2 [1.03] | 37.1 [1.46] |
| 18 | 18 | 14 | 1.125-18 UNEF | 30.7 [1.21] | 26.9 [1.06] | 38.6 [1.52] |
| 20 | 20 | 16 | 1.250-18 UNEF | 31.2 [1.23] | 27.7 [1.09] | 40.1 [1.58] |
| 22 | 22 | 18 | 1.375-18 UNEF | 32.0 [1.26] | 28.2 [1.11] | 41.7 [1.64] |
| 24 | 24 | 22 | 1.625-18 UNEF | 33.5 [1.32] | 30.0 [1.18] | 46.5 [1.83] |
| 28 | 28 | 24 | 1.875-16 UN | 34.8 [1.37] | 31.2 [1.23] | 49.8 [1.96] |
| 32 | 32 | 28 | 2.062-16 UNS | 36.3 [1.43] | 32.5 [1.28] | 52.8 [2.08] |
| 36 | 36 | 28 | 2.312-16 UNS | 37.6 [1.48] | 33.8 [1.33] | 56.1 [2.21] |
| 40 | 40 | 28 | 2.625-16 UN | 38.9 [1.53] | 35.3 [1.39] | 58.9 [2.32] |

*For larger than maximum type 1 entry sizes, a two-piece adapter will be supplied.
Contact TE for information.

### Entry Size Dimensions

| Entry Size | Dimensions | | |
|---|---|---|---|
| | Z ± 0.20 (± 0.51) | Y Dia. Min. | W Max. |
| 03 | 4.75 [.187] | 9.98 [.393] | 39.6 [1.56] |
| 04 | 6.35 [.250] | 11.58 [.456] | 39.6 [1.56] |
| 05 | 7.92 [.312] | 13.08 [.515] | 42.9 [1.69] |
| 06 | 9.53 [.375] | 14.76 [.581] | 42.9 [1.69] |
| 07 | 11.13 [.438] | 16.33 [.643] | 46.0 [1.81] |
| 08 | 12.70 [.500] | 17.91 [.705] | — |
| 09 | 14.27 [.562] | 17.91 [.705] | 49.3 [1.94] |
| 10 | 15.88 [.625] | 21.11 [.831] | 49.3 [1.94] |
| 11 | 17.48 [.688] | 22.68 [.893] | 52.3 [2.06] |
| 12 | 19.05 [.750] | 24.21 [.953] | 52.3 [2.06] |
| 13 | 20.62 [.812] | 24.21 [.953] | 55.6 [2.19] |
| 14 | 22.23 [.875] | 27.46 [1.081] | 55.6 [2.19] |
| 15 | 23.83 [.938] | 29.03 [1.143] | 59.9 [2.36] |
| 16 | 25.40 [1.000] | 30.61 [1.205] | 59.9 [2.36] |
| 18 | 28.58 [1.125] | 35.08 [1.381] | 69.6 [2.74] |
| 20 | 31.75 [1.250] | 38.25 [1.506] | 72.6 [2.86] |
| 22 | 34.93 [1.375] | 41.43 [1.631] | 75.9 [2.99] |
| 24 | 38.10 [1.500] | 44.60 [1.756] | 79.0 [3.11] |
| 28 | 44.45 [1.750] | 50.90 [2.004] | 85.3 [3.36] |





Catalog 1654025
Revised 3-13

www.te.com

Dimensions are shown for reference purposes only. Specifications subject to change.

Dimensions are in millimeters unless otherwise specified.

USA: +1 800 522 6752
Asia Pacific: +86 0 400 820 6015
UK: +44 800 267 666

For additional support numbers please visit www.te.com

## Code 32 MIL-C-22992 (Continued)

### Spin-Coupling Adapters

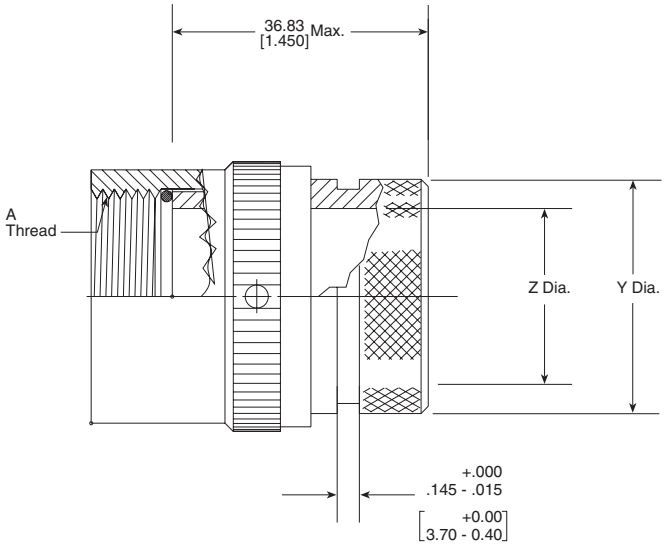


**204M3XX-XXX**

### Table of Dimensions

| Base Part Number | Shell Size | A L.H. Thread Class 2B | Dimensions Y ± .020 (±0.51) | Dimensions Z Min. |
|---|---|---|---|---|
| 12 | 12 | .750-20 UNEF | 20.24 [.797] | 12.47 [.491] |
| 14 | 14 | .875-20 UNEF | 23.44 [.923] | 14.35 [.565] |
| 16 | 16 | 1.000-20 UNEF | 26.42 [1.040] | 17.53 [.690] |
| 18 | 18 | 1.125-18 UNEF | 31.17 [1.227] | 18.19 [.716] |
| 20 | 20 | 1.250-18 UNEF | 34.49 [1.358] | 21.72 [.855] |
| 22 | 22 | 1.375-18 UNEF | 37.21 [1.465] | 25.02 [.985] |
| 24 | 24 | 1.625-18 UNEF | 42.82 [1.686] | 30.48 [1.200] |
| 28 | 28 | 1.875-16 UN | 50.06 [1.971] | 36.58 [1.440] |
| 32 | 32 | 2.062-16 UNS | 55.35 [2.179] | 40.77 [1.605] |
| 36 | 36 | 2.312-16 UNEF | 61.01 [2.402] | 52.96 [2.085] |
| 40 | 40 | 2.625-16 UNS | 67.46 [2.656] | 57.15 [2.250] |
| 44 | 44 | 2.875-16 UNS | 70.66 [2.782] | 62.46 [2.549] |

*For larger than maximum type 1 entry sizes, a two-piece adapter will be supplied.
Contact TE for information.

### Molded Part Size Selection Guide (Spin-Coupling)

| Order No. | Standard K Parts Straight Part No. | Standard K Parts 90° Part No. | Standard K Parts Cable OD (Min.) | Low-profile D Parts Straight Part No. | Low-profile D Parts 90° Part No. | Low-profile D Parts Cable OD (Min.) |
|---|---|---|---|---|---|---|
| 12 | 202K142 | 222K142 | 7.1 [0.28] | 202D232 | 222D232 | 8.4 [0.33] |
| 14, 16 | 202K153 | 222K152 | 8.4 [0.33] | 202D242 | 222D242 | 9.7 [0.38] |
| 18, 20 | 202K163 | 222K163 | 9.9 [0.39] | 202D253 | 222D253 | 10.5 [0.41] |
| 22, 24 | 202K174 | 222K174 | 15.7 [0.62] | 202D263 | 222D263 | 12.2 [0.48] |
| 26, 32, 36 | 202K185 | 222K185 | 16.8 [0.66] | — | — | — |

### Uniboot Parts

| Order No. | Part No. | Cable OD (Min.) |
|---|---|---|
| 12 | 202C632 | 12.7 [0.50] |
| 14, 16 | 202C642 | 17.5 [0.69] |
| 18, 20, 22, 24 | 202C653 | 22.4 [0.88] |

| Available in: | Americas | Europe | Asia Pacific |
|---|---|---|---|
| | ■ | ■ | ■ |



Catalog 1654025
Revised 3-13

www.te.com

Dimensions are shown for reference purposes only. Specifications subject to change.

Dimensions are in millimeters unless otherwise specified.

USA: +1 800 522 6752
Asia Pacific: +86 0 400 820 6015
UK: +44 800 267 666

For additional support numbers please visit www.te.com

## Code 32 MIL-C-22992 (Continued)

### Tinel-Lock Adapters

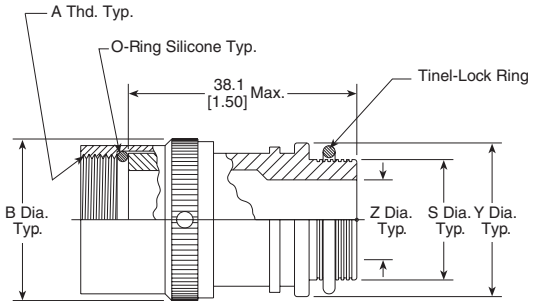


TXR32XX00-XXXXXX

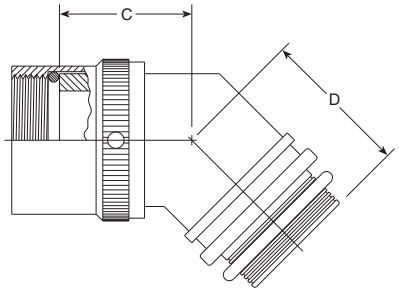


TXR32XX45-XXXXXX

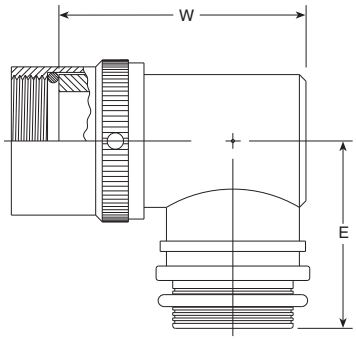


TXR32XX90-XXXXXX

| Order No. | Shell Size | Max. Entry Size Type I | Dimensions | | | | | | | |
|---|---|---|---|---|---|---|---|---|---|---|
| | | | A Left Hand Thd Class 2B | C Max. | D Max. | E Max. | Z + .010 - .020 | S Dia. | Y ± .015 (± 0.38) | W Max. |
| 12 | 12 | 08 | .750-20 UNEF | 29.0 [1.14] | 25.4 [1.00] | 33.5 [1.32] | 19.05 [.750] | 22.28 [.877] / 22.02 [.867] | 26.67 [1.050] | 52.3 [2.06] |
| 14 | 14 | 10 | .875-20 UNEF | 29.7 [1.17] | 25.9 [1.02] | 35.3 [1.39] | 22.23 [.875] | 25.46 [1.002] / 25.17 [.991] | 29.84 [1.175] | 55.6 [2.19] |
| 16 | 16 | 12 | 1.000-20 UNEF | 30.0 [1.18] | 26.2 [1.03] | 37.1 [1.46] | 25.40 [1.000] | 28.63 [1.127] / 28.34 [1.116] | 33.02 [1.300] | 59.01 [2.36] |
| 18 | 18 | 14 | 1.125-18 UNEF | 30.7 [1.21] | 26.9 [1.06] | 38.6 [1.52] | 28.57 [1.125] | 31.81 [1.252] / 31.52 [1.241] | 36.19 [1.425] | 69.6 [2.74] |
| 20 | 20 | 16 | 1.250-18 UNEF | 31.2 [1.23] | 27.7 [1.09] | 40.1 [1.58] | 31.75 [1.250] | 34.98 [1.377] / 34.69 [1.366] | 39..37 [1.550] | 72.6 [2.86] |
| 22 | 22 | 18 | 1.375-18 UNEF | 32.0 [1.26] | 28.2 [1.11] | 41.7 [1.64] | 34.93 [1.375] | 38.15 [1.502] / 37.79 [1.488] | 42.55 [1.675] | 75.9 [2.99] |
| 24 | 24 | 22 | 1.625-18 UNEF | 33.5 [1.32] | 30.0 [1.18] | 46.5 [1.83] | 38.10 [1.500] | 41.33 [1.627] / 40.97 [1.613] | 45.72 [1.800] | 79.0 [3.11] |
| 28 | 28 | 24 | 1.875-16 UN | 34.8 [1.37] | 31.2 [1.23] | 49.8 [1.96] | — | — | — | — |
| 32 | 32 | 24 | 2.062-16 UNS | 36.3 [1.43] | 32.5 [1.28] | 52.8 [2.08] | — | — | — | — |
| 36 | 36 | 24 | 2.312-16 UNS | 37.6 [1.48] | 33.8 [1.33] | 56.1 [2.21] | — | — | — | — |
| 40 | 40 | 24 | 2.625-16 UN | 38.9 [1.53] | 35.3 [1.39] | 58.9 [2.32] | — | — | — | — |

**For larger than maximum type 1 entry sizes, a two-piece adapter will be supplied. Contact TE for information.

| Available in: | Americas | Europe | Asia Pacific |
|---|---|---|---|
| | ■ | ■ | ■ |







Dimensions are shown for reference purposes only. Specifications subject to change.

Dimensions are in millimeters unless otherwise specified.

USA: +1 800 522 6752
Asia Pacific: +86 0 400 820 6015
UK: +44 800 267 666

For additional support numbers please visit www.te.com

## Code 32 MIL-C-22992 (Continued)

### CRES-Lock Adapters (USA)
### BND Adapters (Europe)

### Code 32 Band Strap Adapter

**Notes:**
1. This product is designed to terminate a braided cable shield by means of a band strap and a heat shrinkable lipped boot to a connector.
2. See CH00-0250-016 for ordering information, modifications and additional dimensions.
3. See drawing BND-XX25S for band strap dimensions and information.
4. Adapter to be permanently marked with code identification number and full part number (e.g. 06090-BND32AB00-1812). Band strap shall bear no part marking.
5. All entry sizes are shown in Table II. Maximum entry sizes are as shown in Table I. For larger entry sizes than the maximum, a Type II adapter may be supplied. See CH00-0250-016 for further details.
6. Adapter mates to: MIL-C-22992, Class C and R, MS17343, 44, 45 and 47 Connectors.
7. Anti-rotational set screw, 3 threaded holes 120° ± 5° apart, single mating set screw supplied: AN565DC4H2. Not required for Type II adapters.

**For additional codes available, contact TE.**

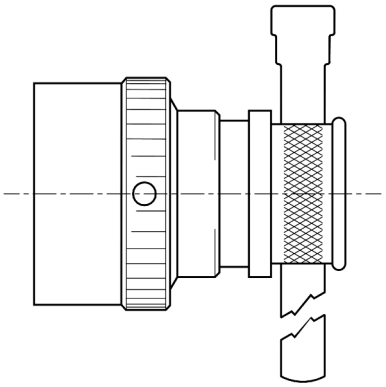

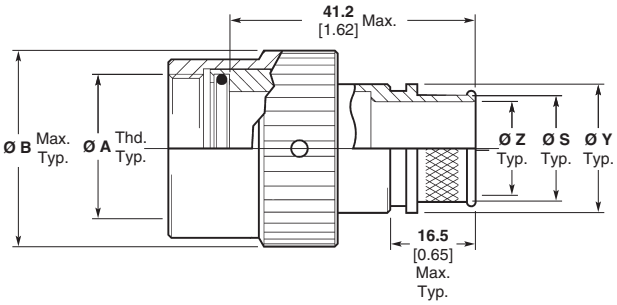


**Straight Adapter**
**Code 00**

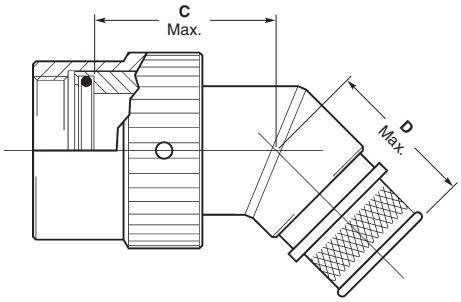


**45° Adapter**
**Code 45**

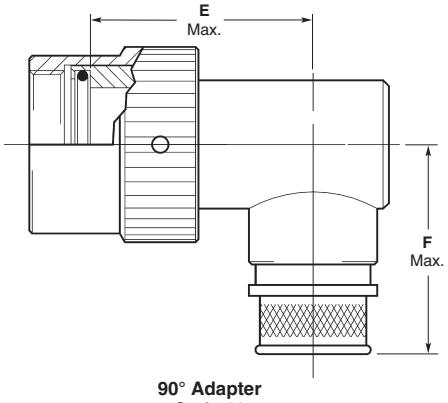


**90° Adapter**
**Code 90**

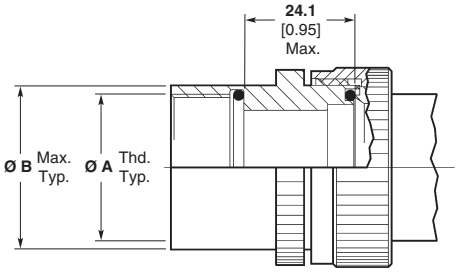


**Type II Modification**
**(See Note 5)**

| Available in: | Americas | Europe | Asia Pacific |
|---|---|---|---|
| | ■ | ■ | ■ |



Catalog 1654025
Revised 3-13

www.te.com

Dimensions are shown for reference purposes only. Specifications subject to change.

Dimensions are in millimeters unless otherwise specified.

USA: +1 800 522 6752
Asia Pacific: +86 0 400 820 6015
UK: +44 800 267 666

For additional support numbers please visit www.te.com

## Code 32 MIL-C-22992 (Continued)

### CRES-Lock Adapters (USA) BND Adapters (Europe) (continued)

### Code 32 Band Strap Adapter (Continued)

**Table I**

| Order Number | Shell Size[2] | Entry Size Max. Type I[1] | Ø A Unified Thread Class 2B | Ø B Max. | C Max. | D Max. | F Max. |
|---|---|---|---|---|---|---|---|
| 12 | 12 | 08 | 0.7500–20 UNEF | **27.2** 1.07 | **29.0** 1.14 | **28.4** 1.12 | **36.6** 1.44 |
| 14 | 14 | 10 | 0.8750–20 UNEF | **30.2** 1.19 | **29.7** 1.17 | **28.9** 1.14 | **38.4** 1.51 |
| 16 | 16 | 12 | 1.0000–20 UNEF | **33.5** 1.32 | **30.0** 1.18 | **29.2** 1.15 | **40.1** 1.58 |
| 18 | 18 | 14 | 1.1250–18 UNEF | **36.6** 1.44 | **30.7** 1.21 | **30.0** 1.18 | **41.7** 1.64 |
| 20 | 20 | 16 | 1.2500–18 UNEF | **39.9** 1.57 | **31.2** 1.23 | **30.7** 1.21 | **43.2** 1.70 |
| 22 | 22 | 18 | 1.3750–18 UNEF | **42.9** 1.69 | **32.0** 1.26 | **31.2** 1.23 | **44.7** 1.76 |
| 24 | 24 | 22 | 1.6250–18 UNEF | **52.6** 2.07 | **33.5** 1.32 | **33.0** 1.30 | **49.5** 1.95 |
| 28 | 28 | 26 | 1.8750–16 UN | **58.9** 2.32 | **34.8** 1.37 | **34.3** 1.35 | **52.8** 2.08 |
| 32 | 32 | 30 | 2.0625–16 UNS | **65.3** 2.57 | **36.3** 1.43 | **35.6** 1.40 | **55.9** 2.20 |
| 36 | 36 | 34 | 2.3125–16 UNS | **71.6** 2.82 | **37.6** 1.48 | **36.8** 1.45 | **59.2** 2.33 |
| 40 | 40 | 34 | 2.6250–16 UN | **78.0** 3.07 | **38.9** 1.53 | **38.4** 1.51 | **62.0** 2.44 |

1. All entry sizes are shown in Table II. Maximum entry sizes are as shown in Table I. For larger entry sizes than the maximum, a Type II adapter may be supplied. See CH00-0250-016 for further details.
2. Adapter mates to: MIL-C-22992, Class C and R, MS17343, 44, 45 and 47 Connectors.

**Table II**

| Entry Size | Ø Z +0.25/-0.50 [+0.010/-0.020] | Ø S ±0.51 [±0.020] | Ø Y ±0.38 [±0.015] | E Max. |
|---|---|---|---|---|
| 03 | **4.75** 0.188 | **7.92** 0.312 | **11.10** 0.438 | **28.3** 1.12 |
| 04 | **6.35** 0.250 | **9.52** 0.375 | **12.70** 0.500 | **29.3** 1.15 |
| 05 | **7.92** 0.312 | **11.12** 0.438 | **14.30** 0.563 | **30.0** 1.18 |
| 06 | **9.52** 0.375 | **12.70** 0.500 | **15.88** 0.625 | **30.8** 1.21 |
| 07 | **11.12** 0.438 | **14.30** 0.562 | **17.50** 0.689 | **31.5** 1.24 |
| 08 | **12.70** 0.500 | **15.88** 0.625 | **19.05** 0.750 | **32.3** 1.27 |
| 09 | **14.30** 0.562 | **17.50** 0.688 | **20.65** 0.813 | **33.3** 1.31 |
| 10 | **15.88** 0.625 | **19.05** 0.750 | **22.23** 0.875 | **34.0** 1.34 |
| 11 | **17.50** 0.688 | **20.65** 0.812 | **23.80** 0.938 | **35.0** 1.38 |
| 12 | **19.05** 0.750 | **22.23** 0.875 | **25.40** 1.000 | **35.8** 1.41 |
| 13 | **20.65** 0.812 | **23.83** 0.938 | **27.00** 1.063 | **36.0** 1.42 |
| 14 | **22.23** 0.875 | **25.40** 1.000 | **30.16** 1.189 | **37.5** 1.48 |

**Table II** (Continued)

| Entry Size | Ø Z +0.25/-0.50 [+0.010/-0.020] | Ø S ±0.51 [±0.020] | Ø Y ±0.38 [±0.015] | E Max. |
|---|---|---|---|---|
| 15 | **23.83** .0938 | **27.00** 1.062 | **31.75** 1.250 | **37.8** 1.49 |
| 16 | **25.40** 1.000 | **28.58** 1.125 | **33.34** 1.313 | **38.3** 1.51 |
| 18 | **28.58** 1.125 | **31.75** 1.250 | **36.51** 1.438 | **39.8** 1.57 |
| 20 | **31.75** 1.250 | **34.90** 1.375 | **39.69** 1.563 | **41.3** 1.63 |
| 22 | **34.90** 1.375 | **38.10** 1.500 | **42.86** 1.688 | **43.0** 1.69 |
| 24 | **38.10** 1.500 | **41.28** 1.625 | **46.83** 1.844 | **44.5** 1.75 |
| 26 | **41.28** 1.625 | **44.45** 1.750 | **49.61** 1.953 | **46.3** 1.82 |
| 28 | **44.45** 1.750 | **47.63** 1.875 | **52.78** 2.078 | **48.3** 1.90 |
| 30 | **47.65** 1.875 | **50.80** 2.000 | **56.36** 2.219 | **50.0** 1.97 |
| 32 | **50.80** 2.000 | **54.00** 2.125 | **59.53** 2.344 | **51.5** 2.03 |
| 34 | **54.00** 2.125 | **57.15** 2.250 | **62.71** 2.469 | **53.3** 2.10 |





Catalog 1654025
Revised 3-13

www.te.com

Dimensions are shown for reference purposes only. Specifications subject to change.

Dimensions are in millimeters unless otherwise specified.

USA: +1 800 522 6752
Asia Pacific: +86 0 400 820 6015
UK: +44 800 267 666

For additional support numbers please visit www.te.com

## Code 40 MIL-C-38999 Series III and IV

### Braided Adapters

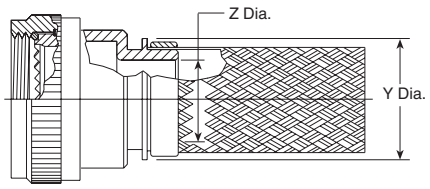


208M7XX-XXXXX

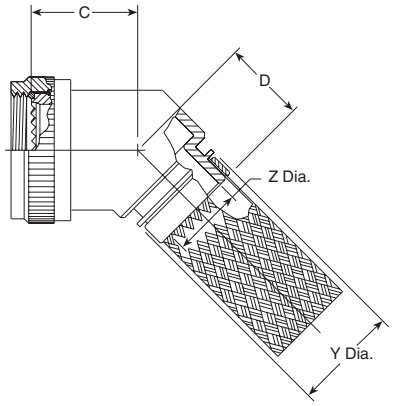


208M8XX-XXXXX

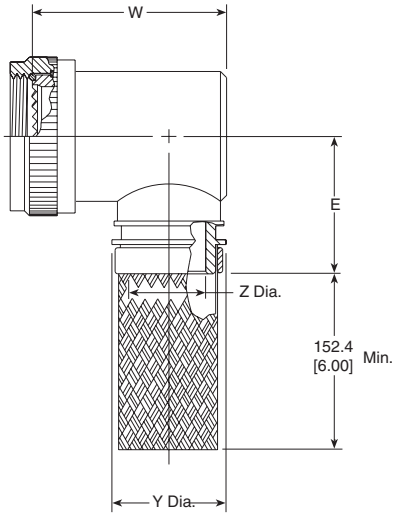


208M9XX-XXXXX

### Table of Dimensions

| Order No. | Shell Size Commercial | Military | Max. Entry* Size Type 1 | Thread | Dimensions | | |
|---|---|---|---|---|---|---|---|
| | | | | | C Max. | D Max. | E Max. |
| 08 | 9 | A | 04 | M12 x 1.0 | 20.8 [0.82] | 22.6 [0.89] | 29.2 [1.15] |
| 10 | 11 | B | 07 | M15 x 1.0 | 21.3 [0.84] | 23.4 [0.92] | 30.7 [1.21] |
| 12 | 13 | C | 09 | M18 x 1.0 | 22.1 [0.87] | 24.1 [0.95] | 32.5 [1.28] |
| 14 | 15 | D | 10 | M2 x 1.0 | 22.6 [0.89] | 24.1 [0.95] | 34.0 [1.34] |
| 16 | 17 | E | 12 | M25 x 1.0 | 23.4 [0.92] | 24.9 [0.98] | 35.6 [1.40] |
| 18 | 19 | F | 14 | M28 x 1.0 | 24.1 [0.95] | 25.7 [1.01] | 37.1 [1.46] |
| 20 | 21 | G | 16 | M31 x 1.0 | 24.6 [0.97] | 26.4 [1.04] | 38.9 [1.53] |
| 22 | 23 | H | 18 | M34 x 1.0 | 25.4 [1.00] | 27.2 [1.07] | 40.4 [1.59] |
| 24 | 25 | J | 20 | M37 x 1.0 | 25.9 [1.02] | 27.2 [1.07] | 42.4 [1.67] |

*For larger than maximum type 1 entry sizes, a two-piece adapter will be supplied. Contact TE for information.

| Available in: | Americas | Europe | Asia Pacific |
|---|---|---|---|
| | ■ | ■ | ■ |



Catalog 1654025
Revised 3-13

www.te.com

Dimensions are shown for reference purposes only. Specifications subject to change.

Dimensions are in millimeters unless otherwise specified.

USA: +1 800 522 6752
Asia Pacific: +86 0 400 820 6015
UK: +44 800 267 666

For additional support numbers please visit www.te.com

## Code 40 MIL-C-38999 Series III and IV (Continued)

### Braided Adapters
(continued)

### Entry Size Dimensions

| Entry Size | Dimensions | | |
|---|---|---|---|
| | Z +0.25–0.5 | Y Dia. | W Max. |
| 04 | 6.35 [0.25] | 13.97 [0.55] | 31.2 [1.23] |
| 05 | 7.92 [0.31] | 15.54 [0.61] | 32.8 [1.29] |
| 06 | 9.52 [0.37] | 17.14 [0.67] | 34.3 [1.35] |
| 07 | 11.09 [0.44] | 18.71 [0.74] | 36.1 [1.42] |
| 08 | 12.7 [0.50] | 20.32 [0.80] | 37.6 [1.48] |
| 10 | 15.87 [0.62] | 23.49 [0.92] | 40.6 [1.60] |
| 12 | 19.05 [0.75] | 26.67 [1.05] | 43.9 [1.73] |
| 14 | 22.23 [0.88] | 29.84 [1.17] | 47.0 [1.85] |
| 16 | 25.4 [1.00] | 33.02 [1.30] | 50.8 [2.00] |
| 18 | 28.57 [1.12] | 36.19 [1.42] | 54.1 [2.13] |
| 20 | 31.75 [1.25] | 39.37 [1.55] | 57.21 [2.25] |

### Molded Part Selection Guide (Braided)

| Tinel-Lock Entry Size | Standard K Parts | | | Low-Profile D Parts | | |
|---|---|---|---|---|---|---|
| | Straight Part No. | 90° Part No. | Cable OD (Min.) | Straight Part No. | 90° Part No. | Cable OD (Min.) |
| 04 | 202K232 | — | 3.3 [0.1] | — | — | — |
| 04 | 202W232 | — | 4.3 [0.2] | — | — | — |
| 04 | 202K121 | 222K121 | 5.6 [0.2] | 202D211 | 222D211 | 6.4 [0.3] |
| 05, 06 | 202K132 | 222K132 | 5.9 [0.2] | 202D221 | 222D221 | 7.4 [0.3] |
| 07, 08 | 202K142 | 222K142 | 7.1 [0.3] | 202D232 | 222D232 | 8.4 [0.3] |
| 10, 12 | 202K153 | 222K152 | 8.4 [0.3] | 202D242 | 222D242 | 9.7 [0.4] |
| 14, 16 | 202K163 | 222K163 | 9.9 [0.4] | 202D253 | 222D253 | 10.5 [0.4] |
| 18, 20, 22 | 202K174 | 222K174 | 15.7 [0.6] | 202D263 | 222D263 | 12.2 [0.5] |
| 24 | 202K185 | 222K185 | 16.8 [0.7] | — | — | — |

### Uniboot Parts

| Tinel- Lock Entry Size | Part No. | Cable OD (Min.) |
|---|---|---|
| 04 | 202C611 | 4.8 [0.19] |
| 05, 06, 07 | 202C621 | 8.1 [0.32] |
| 08, 10, 12 | 202C632 | 12.7 [0.50] |
| 12, 14, 16 | 202C642 | 17.5 [0.69] |
| 16, 18, 20, 22 | 202C653 | 22.4 [0.88] |
| 24 | 202C663 | 22.9 [0.90] |





Catalog 1654025
Revised 3-13

www.te.com

Dimensions are shown for reference purposes only. Specifications subject to change.

Dimensions are in millimeters unless otherwise specified.

USA: +1 800 522 6752
Asia Pacific: +86 0 400 820 6015
UK: +44 800 267 666

For additional support numbers please visit www.te.com

## Code 40 MIL-C-38999 Series III and IV (Continued)

### Solid Adapters

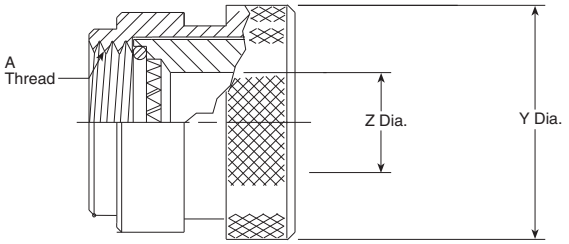


209M3XX-XXX

### Table of Dimensions

| Order No. | Shell Size Commercial | Military | A Thread | Dimensions Y +.000- .030 (+0.00) (–0.76) | Dimensions Z Dia. Min. |
|---|---|---|---|---|---|
| 08 | 9 | A | M12 x 1.0 | 18.26 [.719] | 6.35 [.250] |
| 10 | 11 | B | M15 x 1.0 | 21.44 [.844] | 9.52 [.375] |
| 12 | 13 | C | M18 x 1.0 | 24.61 [.969] | 12.70 [.500] |
| 14 | 15 | D | M22 x 1.0 | 30.91 [1.217] | 15.88 [.625] |
| 16 | 17 | E | M25 x 1.0 | 34.40 [1.354] | 19.05 [.750] |
| 18 | 19 | F | M28 x 1.0 | 37.50 [1.476] | 20.62 [.812] |
| 20 | 21 | G | M31 x 1.0 | 38.89 [1.531] | 23.80 [.937] |
| 22 | 23 | H | M34 x 1.0 | 42.06 [1.656] | 26.97 [1.062] |
| 24 | 25 | J | M37 x 1.0 | 45.24 [1.781] | 30.18 [1.188] |

### Molded Part Selection Guide (Solid)

| Order No. | Standard K Parts Straight Part No. | Standard K Parts 90° Part No. | Standard K Parts Cable OD (Min.) | Low-Profile D Parts Straight Part No. | Low-Profile D Parts 90° Part No. | Low-Profile D Parts Cable OD (Min.) |
|---|---|---|---|---|---|---|
| 08 | 202K132 | 222K132 | 5.9 [0.23] | 202D221 | 222D221 | 7.4 [0.29] |
| 10 | 202K142 | 222K142 | 7.1 [0.28] | 202D232 | 222D232 | 8.4 [0.33] |
| 12, 14 | 202K153 | 222K152 | 8.4 [0.33] | 202D242 | 222D242 | 9.7 [0.38] |
| 16, 18 | 202K163 | 222K163 | 9.9 [0.39] | 202D253 | 222D253 | 10.5 [0.41] |
| 20, 22, 24 | 202K174 | 222K174 | 15.7 [0.62] | 202D263 | 222D263 | 12.2 [0.48] |

### Uniboot Parts

| Order No. | Part No. | Cable OD (Min.) |
|---|---|---|
| 08 | 202C621 | 8.1 [0.32] |
| 10 | 202C632 | 12.7 [0.50] |
| 12, 14 | 202C642 | 17.5 [0.69] |
| 16, 18, 20, 22 | 202C653 | 22.4 [0.88] |

| Available in: | Americas | Europe | Asia Pacific |
|---|---|---|---|
| | ■ | ■ | ■ |



Catalog 1654025
Revised 3-13

www.te.com

Dimensions are shown for reference purposes only. Specifications subject to change.

Dimensions are in millimeters unless otherwise specified.

USA: +1 800 522 6752
Asia Pacific: +86 0 400 820 6015
UK: +44 800 267 666

For additional support numbers please visit www.te.com

## Code 40 MIL-C-38999 Series III and IV (Continued)

### Spin-Coupling Adapters

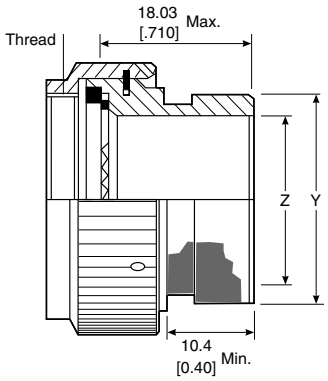


209M4XX-XXX

### Table of Dimensions

| Order No. | Shell Size Commercial | Military | Thread | Dimensions | |
|---|---|---|---|---|---|
| | | | | Y Dia. Max. | Z Dia. Max. |
| 08 | 9 | A | M12 x 1.0 | 13.54 [0.53] | 6.35 [0.25] |
| 10 | 11 | B | M15 x 1.0 | 15.37 [0.61] | 9.52 [0.37] |
| 12 | 13 | C | M18 x 1.0 | 19.66 [0.77] | 12.7 [0.50] |
| 14 | 15 | D | M22 x 1.0 | 21.29 [0.84] | 15.75 [0.62] |
| 16 | 17 | E | M25 x 1.0 | 24.46 [0.96] | 18.92 [0.74] |
| 18 | 19 | F | M28 x 1.0 | 26.47 [1.04] | 20.62 [0.81] |
| 20 | 21 | G | M31 x 1.0 | 30.91 [1.22] | 23.8 [0.94] |
| 22 | 23 | H | M34 x 1.0 | 34.42 [1.36] | 26.97 [1.06] |
| 24 | 25 | J | M37 x 1.0 | 36.65 [1.44] | 29.85 [1.18] |

### Molded Part Selection Guide (Spin-Coupling)

| Order No. | Standard K Parts | | | Low-Profile D Parts | | |
|---|---|---|---|---|---|---|
| | Straight Part No. | 90° Part No. | Cable OD (Min.) | Straight Part No. | 90° Part No. | Cable OD (Min.) |
| 03, 08 | 202W232 | — | 4.3 [0.19] | — | — | — |
| 03, 08 | 202K121 | 222K121 | 5.6 [0.22] | 202D211 | 222D211 | 6.4 [0.25] |
| 10, 11 | 202K132 | 222K132 | 5.9 [0.23] | 202D221 | 222D221 | 7.4 [0.29] |
| 12, 14 | 202K142 | 222K142 | 7.1 [0.28] | 202D232 | 222D232 | 8.4 [0.33] |
| 16, 18 | 202K153 | 222K152 | 8.4 [0.33] | 202D242 | 222D242 | 9.7 [0.38] |
| 20, 22 | 202K163 | 222K163 | 9.9 [0.39] | 202D253 | 222D253 | 10.5 [0.41] |
| 24, 28 | 202K174 | 222K174 | 15.7 [0.62] | 202D263 | 222D263 | 12.2 [0.48] |
| 32, 36 | 202K185 | 222K185 | 16.8 [0.66] | — | — | — |

### Uniboot Parts

| Order No. | Part No. | Cable OD (Min.) |
|---|---|---|
| 03, 08 | 202C611 | 4.8 [0.19] |
| 10, 11, 12 | 202C621 | 8.1 [0.32] |
| 14, 16 | 202C632 | 12.7 [0.50] |
| 18, 20 | 202C642 | 17.5 [0.69] |
| 22, 24 | 202C653 | 22.4 [0.88] |

| Available in: | Americas | Europe | Asia Pacific |
|---|---|---|---|
| | ■ | ■ | ■ |





Catalog 1654025
Revised 3-13

www.te.com

Dimensions are shown for reference purposes only. Specifications subject to change.

Dimensions are in millimeters unless otherwise specified.

USA: +1 800 522 6752
Asia Pacific: +86 0 400 820 6015
UK: +44 800 267 666

For additional support numbers please visit www.te.com

## Code 40 MIL-C-38999 Series III and IV (Continued)

### Tinel-Lock Adapters

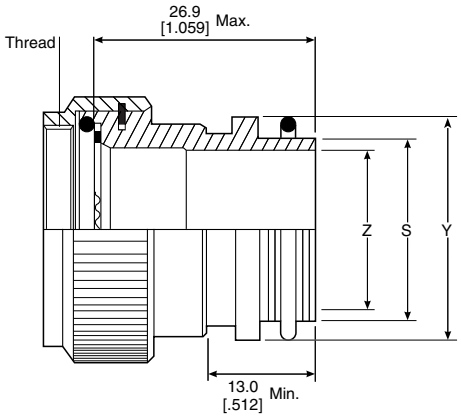


TXR40XX00-XXXXXX

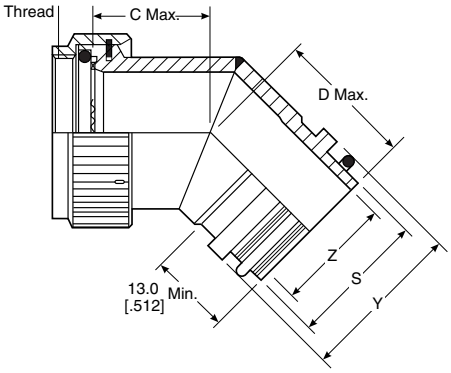


TXR40XX45-XXXXXX

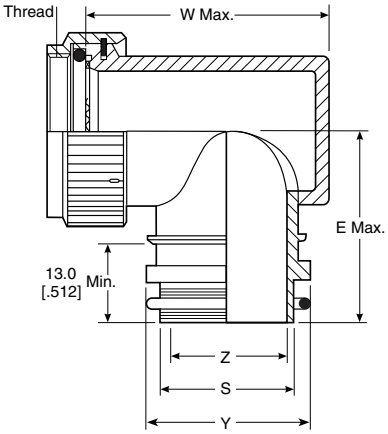


TXR40XX90-XXXXXX

### Table of Dimensions

| Order No. | Shell Size Commercial | Military | Max. Entry* Size Type 1 | Thread | Dimensions | | |
|---|---|---|---|---|---|---|---|
| | | | | | C Max. | D Max. | E Max. |
| 08 | 9 | A | 04 | M12 x 1.0 | 20.8 [0.82] | 22.6 [0.89] | 27.9 [1.10] |
| 10 | 11 | B | 07 | M15 x 1.0 | 21.3 [0.84] | 23.4 [0.92] | 30.5 [1.20] |
| 12 | 13 | C | 08 | M18 x 1.0 | 22.1 [0.87] | 24.1 [0.95] | 32.0 [1.26] |
| 14 | 15 | D | 10 | M2 x 1.0 | 22.6 [0.89] | 24.1 [0.95] | 34.0 [1.34] |
| 16 | 17 | E | 12 | M25 x 1.0 | 23.4 [0.92] | 24.9 [0.98] | 35.6 [1.40] |
| 18 | 19 | F | 14 | M28 x 1.0 | 24.1 [0.95] | 25.7 [1.01] | 36.8 [1.45] |
| 20 | 21 | G | 16 | M31 x 1.0 | 24.6 [0.97] | 26.4 [1.04] | 38.4 [1.51] |
| 22 | 23 | H | 18 | M34 x 1.0 | 25.4 [1.00] | 27.2 [1.07] | 39.9 [1.57] |
| 24 | 25 | J | 20 | M37 x 1.0 | 25.9 [1.02] | 27.2 [1.07] | 42.4 [1.67] |

*For larger than maximum type 1 entry sizes, a two-piece adapter will be supplied. Contact TE for information.

| Available in: | Americas | Europe | Asia Pacific |
|---|---|---|---|
| | ■ | ■ | ■ |



Catalog 1654025
Revised 3-13

www.te.com

Dimensions are shown for reference purposes only. Specifications subject to change.

Dimensions are in millimeters unless otherwise specified.

USA: +1 800 522 6752
Asia Pacific: +86 0 400 820 6015
UK: +44 800 267 666

For additional support numbers please visit www.te.com

## Code 40 MIL-C-38999 Series III and IV (Continued)

### Tinel-Lock Adapters
(continued)

### Entry Size Dimensions

| Entry Size | Dimensions | | | |
|---|---|---|---|---|
| | Z +0.25–0.5 | S Diameter (Min.–Max.) | Y Dia. | W Max. |
| 04 | 6.35 [0.25] | 9.39–9.56 [0.37–0.38] | 13.97 [0.55] | 31.2 [1.23] |
| 05 | 7.92 [0.31] | 10.97–11.13 [0.43–0.44] | 15.54 [0.61] | 32.8 [1.29] |
| 06 | 9.52 [0.37] | 12.57–12.73 [0.49–0.50] | 17.14 [0.67] | 34.3 [1.35] |
| 07 | 11.09 [0.44] | 14.12–14.31 [0.55–0.56] | 18.71 [0.74] | 36.1 [1.42] |
| 08 | 12.7 [0.50] | 15.72–15.91 [0.62–0.63] | 20.32 [0.80] | 37.6 [1.48] |
| 10 | 15.87 [0.62] | 18.84–19.11 [0.74–0.75] | 23.49 [0.92] | 40.6 [1.60] |
| 12 | 19.05 [0.75] | 22.02–22.28 [0.87–0.88] | 26.67 [1.05] | 43.9 [1.73] |
| 14 | 22.23 [0.88] | 25.17–25.46 [0.99–1.00] | 29.84 [1.17] | 47.0 [1.85] |
| 16 | 25.4 [1.00] | 28.34–28.63 [1.12–1.13] | 33.02 [1.30] | 50.8 [2.00] |
| 18 | 28.57 [1.12] | 31.52–31.81 [1.24–1.25] | 36.19 [1.42] | 54.1 [2.13] |
| 20 | 31.75 [1.25] | 34.69–34.98 [1.37–1.38] | 39.37 [1.55] | 57.21 [2.25] |

### Molded Part Selection Guide (Tinel)

| Tinel-Lock Entry Size | Standard K Parts | | | Low-Profile D Parts | | |
|---|---|---|---|---|---|---|
| | Straight Part No. | 90° Part No. | Cable OD (Min.) | Straight Part No. | 90° Part No. | Cable OD (Min.) |
| 04 | 202K232 | — | 3.3 [0.1] | — | — | — |
| 04 | 202W232 | — | 4.3 [0.2] | — | — | — |
| 04 | 202K121 | 222K121 | 5.6 [0.2] | 202D211 | 222D211 | 6.4 [0.3] |
| 05, 06 | 202K132 | 222K132 | 5.9 [0.2] | 202D221 | 222D221 | 7.4 [0.3] |
| 07, 08 | 202K142 | 222K142 | 7.1 [0.3] | 202D232 | 222D232 | 8.4 [0.3] |
| 10, 12 | 202K153 | 222K152 | 8.4 [0.3] | 202D242 | 222D242 | 9.7 [0.4] |
| 14, 16 | 202K163 | 222K163 | 9.9 [0.4] | 202D253 | 222D253 | 10.5 [0.4] |
| 18, 20, 22 | 202K174 | 222K174 | 15.7 [0.6] | 202D263 | 222D263 | 12.2 [0.5] |
| 24 | 202K185 | 222K185 | 16.8 [0.7] | — | — | — |

### Uniboot Parts

| Tinel-Lock Entry Size | Part No. | Cable OD (Min.) |
|---|---|---|
| 04 | 202C611 | 4.8 [0.19] |
| 05, 06, 07 | 202C621 | 8.1 [0.32] |
| 08, 10, 12 | 202C632 | 12.7 [0.50] |
| 12, 14, 16 | 202C642 | 17.5 [0.69] |
| 16, 18, 20, 22 | 202C653 | 22.4 [0.88] |
| 24 | 202C663 | 22.9 [0.90] |





Catalog 1654025
Revised 3-13

www.te.com

Dimensions are shown for reference purposes only. Specifications subject to change.

Dimensions are in millimeters unless otherwise specified.

USA: +1 800 522 6752
Asia Pacific: +86 0 400 820 6015
UK: +44 800 267 666

For additional support numbers please visit www.te.com

## Code 40 MIL-C-38999 Series III and IV (Continued)

### CRES-Lock Adapters (USA)
### BND Adapters (Europe)

### Code 40 Band Strap Adapter

**Notes:**
1. This product is designed to terminate a braided cable shield by means of a band strap and a heat shrinkable lipped boot to a connector.
2. See CH00-0250-016 for ordering information, modifications and additional dimensions.
3. See drawing BND-XX25S for band strap dimensions and information.
4. Adapter to be permanently marked with code identification number and full part number (e.g. 06090-BND40AB00-1814). Band strap shall bear no part marking.
5. All entry sizes are shown in Table II. Maximum entry sizes are as shown in Table I. For larger entry sizes than the maximum, a Type II adapter may be supplied. See CH00-0250-016 for further details.
6. Adapter mates to: MIL-C-38999 Series III and IV, Class C, F, K and W, D38999/20, /24, /26, /40, /46 and /47 Connectors. When so mated it shall provide a water-tight seal meeting the requirements of MIL-C-85049, paragraph 3.5.7.
7. Coupling nut shall have 3 lock wire holes 120° apart.

**For additional codes available, contact TE.**

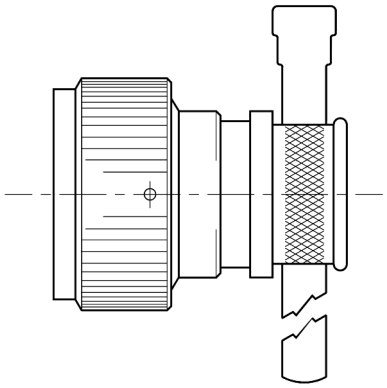

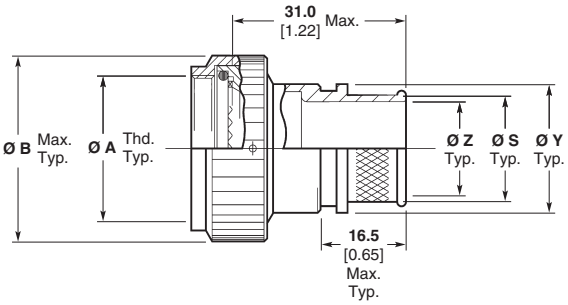


**Straight Adapter**
**Code 00**

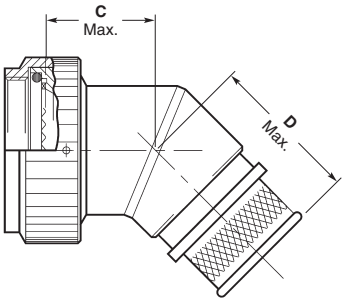


**45° Adapter**
**Code 45**

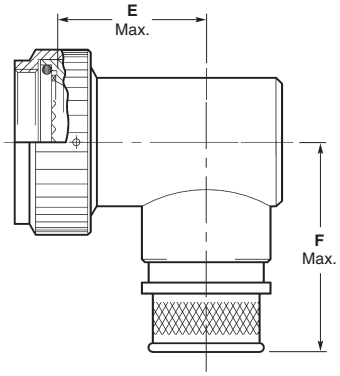


**90° Adapter**
**Code 90**

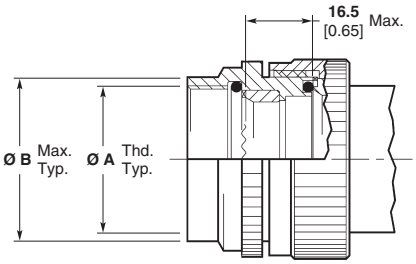


**Type II Modification**
**(See Note 5)**

| Available in: | Americas | Europe | Asia Pacific |
|---|---|---|---|
| | ■ | ■ | ■ |



Catalog 1654025
Revised 3-13

www.te.com

Dimensions are shown for reference purposes only. Specifications subject to change.

Dimensions are in millimeters unless otherwise specified.

USA: +1 800 522 6752
Asia Pacific: +86 0 400 820 6015
UK: +44 800 267 666

For additional support numbers please visit www.te.com

## Code 40 MIL-C-38999 Series III and IV (Continued)

### CRES-Lock Adapters (USA) BND Adapters (Europe) (continued)

### Code 40 Band Strap Adapter (Continued)

**Table I**

| Order Number | Shell Size[2] Com. | Shell Size[2] MIL | Entry Size Max. Type I[1] | Ø A Metric Thread Class 2B | Ø B Max. | Ø B Max.[3] | C Max. | D Max. | F Max. |
|---|---|---|---|---|---|---|---|---|---|
| 8 | 9 | A | 04 | M12 x 1.0 | **19.1** 0.75 | **24.6** 0.97 | **20.8** 0.82 | **26.7** 1.05 | **32.0** 1.26 |
| 10 | 11 | B | 07 | M15 x 1.0 | **21.6** 0.85 | **27.0** 1.06 | **21.3** 0.84 | **27.4** 1.08 | **34.5** 1.36 |
| 12 | 13 | C | 09 | M18 x 1.0 | **25.4** 1.00 | **31.0** 1.22 | **22.1** 0.87 | **28.2** 1.11 | **36.1** 1.42 |
| 14 | 15 | D | 10 | M22 x 1.0 | **29.2** 1.15 | **35.8** 1.41 | **22.6** 0.89 | **28.2** 1.11 | **38.1** 1.50 |
| 16 | 17 | E | 12 | M25 x 1.0 | **31.8** 1.25 | **37.3** 1.47 | **23.4** 0.92 | **29.0** 1.14 | **39.6** 1.56 |
| 18 | 19 | F | 14 | M28 x 1.0 | **35.6** 1.40 | **40.6** 1.60 | **24.1** 0.95 | **29.7** 1.17 | **40.9** 1.61 |
| 20 | 21 | G | 16 | M31 x 1.0 | **38.1** 1.50 | **44.5** 1.75 | **24.6** 0.97 | **30.5** 1.20 | **42.4** 1.67 |
| 22 | 23 | H | 18 | M34 x 1.0 | **41.9** 1.65 | **47.0** 1.85 | **25.4** 1.00 | **31.3** 1.23 | **43.9** 1.73 |
| 24 | 25 | J | 20 | M37 x 1.0 | **44.5** 1.75 | **51.6** 2.03 | **25.9** 1.02 | **31.3** 1.23 | **46.5** 1.83 |

1. All entry sizes are shown in Table II. Maximum entry sizes are as shown in Table I. For larger entry sizes than the maximum, a Type II adapter may be supplied. See CH00-0250-016 for further details.
2. Adapter mates to: MIL-C-38999 Series III and IV, Class C, F, K and W, D38999/20, /24, /26, /40, /46 and /47 Connectors. When so mated it shall provide a water-tight seal meeting the requirements of MIL-C-85049, paragraph 3.5.7.
3. These dimensions apply if a self-locking coupling nut is used, modification code “S”.

**Table II**

| Entry Size | Ø Z +0.25/-0.50 [+0.010/-0.020] | Ø S ±0.51 [±0.020] | Ø Y ±0.38 [±0.015] | E Max. |
|---|---|---|---|---|
| 03 | **4.75** 0.188 | **7.92** 0.312 | **11.10** 0.438 | **15.8** 0.62 |
| 04 | **6.35** 0.250 | **9.52** 0.375 | **12.70** 0.500 | **16.3** 0.64 |
| 05 | **7.92** 0.312 | **11.12** 0.438 | **14.30** 0.563 | **16.8** 0.66 |
| 06 | **9.52** 0.375 | **12.70** 0.500 | **15.88** 0.625 | **17.8** 0.70 |
| 07 | **11.12** 0.438 | **14.30** 0.562 | **17.50** 0.689 | **18.3** 0.72 |
| 08 | **12.70** 0.500 | **15.88** 0.625 | **19.05** 0.750 | **19.8** 0.78 |
| 09 | **14.30** 0.562 | **17.50** 0.688 | **20.65** 0.813 | **21.3** 0.84 |
| 10 | **15.88** 0.625 | **19.05** 0.750 | **22.23** 0.875 | **22.4** 0.88 |
| 11 | **17.50** 0.688 | **20.65** 0.812 | **23.80** 0.938 | **22.9** 0.90 |
| 12 | **19.05** 0.750 | **22.23** 0.875 | **25.40** 1.000 | **23.4** 0.92 |
| 13 | **20.65** 0.812 | **23.83** 0.938 | **27.00** 1.063 | **24.4** 0.96 |
| 14 | **22.23** 0.875 | **25.40** 1.000 | **30.16** 1.189 | **25.4** 1.00 |

**Table II** (Continued)

| Entry Size | Ø Z +0.25/-0.50 [+0.010/-0.020] | Ø S ±0.51 [±0.020] | Ø Y ±0.38 [±0.015] | E Max. |
|---|---|---|---|---|
| 15 | **23.83** .0938 | **27.00** 1.062 | **31.75** 1.250 | **25.4** 1.00 |
| 16 | **25.40** 1.000 | **28.58** 1.125 | **33.34** 1.313 | **26.4** 1.04 |
| 18 | **28.58** 1.125 | **31.75** 1.250 | **36.51** 1.438 | **27.7** 1.09 |
| 20 | **31.75** 1.250 | **34.90** 1.375 | **39.69** 1.563 | **29.2** 1.15 |
| 22 | **34.90** 1.375 | **38.10** 1.500 | **42.86** 1.688 | N/A |
| 24 | **38.10** 1.500 | **41.28** 1.625 | **46.83** 1.844 | N/A |
| 26 | **41.28** 1.625 | **44.45** 1.750 | **49.61** 1.953 | N/A |
| 28 | **44.45** 1.750 | **47.63** 1.875 | **52.78** 2.078 | N/A |
| 30 | **47.65** 1.875 | **50.80** 2.000 | **56.36** 2.219 | N/A |
| 32 | **50.80** 2.000 | **54.00** 2.125 | **59.53** 2.344 | N/A |
| 34 | **54.00** 2.125 | **57.15** 2.250 | **62.71** 2.469 | N/A |







Dimensions are shown for reference purposes only. Specifications subject to change.

Dimensions are in millimeters unless otherwise specified.

USA: +1 800 522 6752
Asia Pacific: +86 0 400 820 6015
UK: +44 800 267 666

For additional support numbers please visit www.te.com

## Code 41 MIL-C-38999 Series I and II

### Braided Adapters

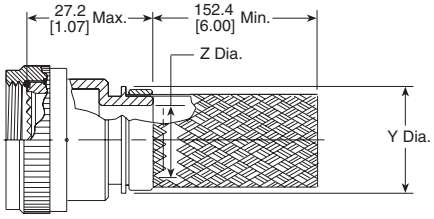


204M0XX-XXXXX

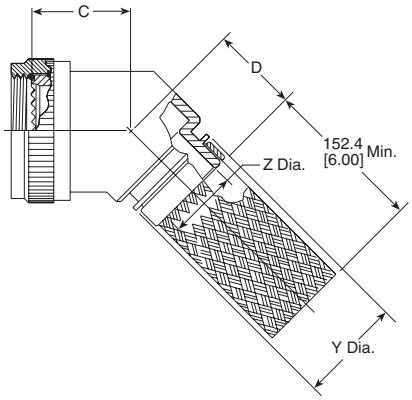


204M1XX-XXXXX

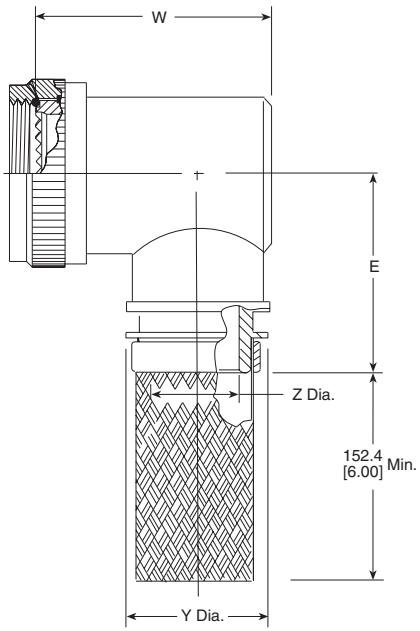


204M2XX-XXXXX

### Table of Dimensions

| Order No. | Shell Size | | Max. Entry* Size Type 1 | A Unified Thread Class 2B | Dimensions | | |
|---|---|---|---|---|---|---|---|
| | Series I | Series II | | | C Max. | D Max. | E Max. |
| 08 | 9 | 8 | 04 | .438-28 UNEF | 19.8 [0.78] | 23.1 [0.91] | 29.2 [1.15] |
| 10 | 11 | 10 | 06 | .562-24 UNEF | 20.3 [0.80] | 23.6 [0.93] | 30.7 [1.21] |
| 12 | 13 | 12 | 08 | .688-24 UNEF | 21.1 [0.83] | 24.4 [0.96] | 32.5 [1.28] |
| 14 | 15 | 14 | 10 | .812-20 UNEF | 21.6 [0.85] | 24.9 [0.98] | 34.0 [1.34] |
| 16 | 17 | 16 | 12 | .938-20 UNEF | 22.4 [0.88] | 25.4 [1.00] | 35.6 [1.40] |
| 18 | 19 | 18 | 13 | 1.062-18 UNEF | 22.9 [0.90] | 26.2 [1.03] | 37.1 [1.46] |
| 20 | 21 | 20 | 15 | 1.188-18 UNEF | 23.6 [0.93] | 26.9 [1.06] | 38.9 [1.53] |
| 22 | 23 | 22 | 16 | 1.312-18 UNEF | 24.4 [0.96] | 27.4 [1.08] | 40.4 [1.59] |
| 24 | 25 | 24 | 18 | 1.438-18 UNEF | 24.9 [0.98] | 28.2 [1.11] | 41.9 [1.65] |

*For larger than maximum type 1 entry sizes, a two-piece adapter will be supplied.
Contact TE for information.

| Available in: | Americas | Europe | Asia Pacific |
|---|---|---|---|
| | ■ | ■ | ■ |



Catalog 1654025
Revised 3-13

www.te.com

Dimensions are shown for reference purposes only. Specifications subject to change.

Dimensions are in millimeters unless otherwise specified.

USA: +1 800 522 6752
Asia Pacific: +86 0 400 820 6015
UK: +44 800 267 666

For additional support numbers please visit www.te.com

## Code 41 MIL-C-38999 Series I and II (Continued)

### Braided Adapters
(continued)

### Entry Size Dimensions

| Entry Size | Dimensions | | |
|---|---|---|---|
| | Z ±0.020 (±0.51) | Y Dia. Min. | W Max. |
| 03 | 4.75 [.187] | 9.98 [.393] | 27.2 [1.07] |
| 04 | 6.35 [.250] | 11.58 [.456] | 27.2 [1.07] |
| 05 | 7.92 [.312] | 13.08 [.515] | 28.7 [1.13] |
| 06 | 9.53 [.375] | 14.76 [.581] | 30.2 [1.19] |
| 07 | 11.13 [.438] | 16.33 [.643] | 31.8 [1.25] |
| 08 | 12.70 [.500] | 17.91 [.705] | 33.5 [1.32] |
| 09 | 14.27 [.562] | 17.91 [.705] | 36.6 [1.44] |
| 10 | 15.88 [.625] | 21.11 [.831] | 36.6 [1.44] |
| 11 | 17.48 [.688] | 22.68 [.893] | 39.9 [1.57] |
| 12 | 19.05 [.750] | 24.21 [.953] | 39.9 [1.57] |
| 13 | 20.62 [.812] | 24.21 [.953] | 42.9 [1.69] |
| 14 | 22.23 [.875] | 27.46 [1.081] | 42.9 [1.69] |
| 15 | 23.83 [.938] | 29.03 [1.143] | 46.2 [1.82] |
| 16 | 25.40 [1.000] | 30.61 [1.205] | 46.2 [1.82] |
| 18 | 28.58 [1.125] | 35.08 [1.381] | 49.3 [1.94] |
| 20 | 31.75 [1.250] | 38.25 [1.506] | — |
| 22 | 34.93 [1.375] | 41.43 [1.631] | — |
| 24 | 38.10 [1.500] | 44.60 [1.756] | — |
| 28 | 44.45 [1.750] | 50.90 [2.004] | — |

### Molded Part Selection Guide (Braided)

| Tinel-Lock Entry Size | Standard K Parts | | | Low-Profile D Parts | | |
|---|---|---|---|---|---|---|
| | Straight Part No. | 90° Part No. | Cable OD (Min.) | Straight Part No. | 90° Part No. | Cable OD (Min.) |
| 04 | 202K232 | — | 3.3 [0.1] | — | — | — |
| 04 | 202W232 | — | 4.3 [0.2] | — | — | — |
| 04 | 202K121 | 222K121 | 5.6 [0.2] | 202D211 | 222D211 | 6.4 [0.3] |
| 05, 06 | 202K132 | 222K132 | 5.9 [0.2] | 202D221 | 222D221 | 7.4 [0.3] |
| 07, 08 | 202K142 | 222K142 | 7.1 [0.3] | 202D232 | 222D232 | 8.4 [0.3] |
| 10, 12 | 202K153 | 222K152 | 8.4 [0.3] | 202D242 | 222D242 | 9.7 [0.4] |
| 14, 16 | 202K163 | 222K163 | 9.9 [0.4] | 202D253 | 222D253 | 10.5 [0.4] |
| 18, 20, 22 | 202K174 | 222K174 | 15.7 [0.6] | 202D263 | 222D263 | 12.2 [0.5] |
| 24 | 202K185 | 222K185 | 16.8 [0.7] | — | — | — |

### Uniboot Parts

| Order No. | Part No. | Cable OD (Min.) |
|---|---|---|
| 04 | 202C611 | 4.8 [0.19] |
| 05, 06, 07 | 202C621 | 8.1 [0.32] |
| 08, 10, 12 | 202C632 | 12.7 [0.50] |
| 12, 14, 16 | 202C642 | 17.5 [0.69] |
| 16, 18, 20, 22 | 202C653 | 22.4 [0.88] |
| 24 | 202C663 | 22.9 [0.90] |





Catalog 1654025
Revised 3-13

www.te.com

Dimensions are shown for reference purposes only. Specifications subject to change.

Dimensions are in millimeters unless otherwise specified.

USA: +1 800 522 6752
Asia Pacific: +86 0 400 820 6015
UK: +44 800 267 666

For additional support numbers please visit www.te.com

## Code 41 MIL-C-38999 Series I and II (Continued)

### Solid Adapters

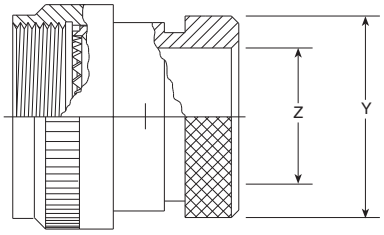


202M1XX-XXX

### Table of Dimensions

| Order No. | Shell Size Series I | Series II | Thread | Dimensions | |
|---|---|---|---|---|---|
| | | | | Y +0.00-0.30 (+0.00) (-0.76) dia. | Z min. |
| 08 | 9 | 8 | .438-28 UNEF | 18.26 [.719] | 6.71 [.264] |
| 10 | 11 | 10 | .562-24 UNEF | 21.44 [.844] | 9.96 [.392] |
| 12 | 13 | 12 | .688-24 UNEF | 24.61 [.969] | 12.85 [.506] |
| 14 | 15 | 14 | .812-20 UNEF | 27.79 [1.094] | 16.03 [.631] |
| 16 | 17 | 16 | .938-20 UNEF | 32.54 [1.281] | 19.20 [.756] |
| 18 | 19 | 18 | 1.062-18 UNEF | 35.71 [1.406] | 21.44 [.844] |
| 20 | 21 | 20 | 1.188-18 UNEF | 38.89 [1.531] | 24.64 [.970] |
| 22 | 23 | 22 | 1.312-18 UNEF | 42.06 [1.656] | 27.79 [1.094] |
| 24 | 25 | 24 | 1.438-18 UNEF | 45.24 [1.781] | 30.71 [1.209] |

### Molded Part Selection Guide (Solid)

| Order No. | Standard K Parts | | | Low-Profile D Parts | | |
|---|---|---|---|---|---|---|
| | Straight Part No. | 90° Part No. | Cable OD (Min.) | Straight Part No. | 90° Part No. | Cable OD (Min.) |
| 08 | 202K132 | 222K132 | 5.9 [0.23] | 202D221 | 222D221 | 7.4 [0.29] |
| 10 | 202K142 | 222K142 | 7.1 [0.28] | 202D232 | 222D232 | 8.4 [0.33] |
| 12, 14 | 202K153 | 222K152 | 8.4 [0.33] | 202D242 | 222D242 | 9.7 [0.38] |
| 16, 18 | 202K163 | 222K163 | 9.9 [0.39] | 202D253 | 222D253 | 10.5 [0.41] |
| 20, 22, 24 | 202K174 | 222K174 | 15.7 [0.62] | 202D263 | 222D263 | 12.2 [0.48] |

### Uniboot Parts

| Order No. | Part No. | Cable OD (Min.) |
|---|---|---|
| 08 | 202C621 | 8.1 [0.32] |
| 10 | 202C632 | 12.7 [0.50] |
| 12, 14 | 202C642 | 17.5 [0.69] |
| 16, 18, 20, 22 | 202C653 | 22.4 [0.88] |

| Available in: | Americas | Europe | Asia Pacific |
|---|---|---|---|
| | ■ | ■ | ■ |



Catalog 1654025
Revised 3-13

www.te.com

Dimensions are shown for reference purposes only. Specifications subject to change.

Dimensions are in millimeters unless otherwise specified.

USA: +1 800 522 6752
Asia Pacific: +86 0 400 820 6015
UK: +44 800 267 666

For additional support numbers please visit www.te.com

## Code 41 MIL-C-38999 Series I and II (Continued)

### Spin-Coupling Adapters

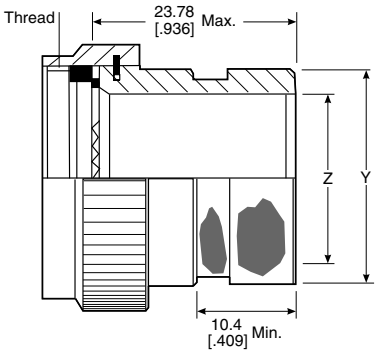


**202M2XX-XXX**

### Table of Dimensions

| Order No. | Shell Size Series I | Series II | Thread | Dimensions | |
|---|---|---|---|---|---|
| | | | | Y +0.00-0.76 Dia. | Z Min. |
| 08 | 9 | 8 | .438-28 UNEF | 13.54 [0.53] | 6.35 [0.25] |
| 10 | 11 | 10 | .562-24 UNEF | 15.37 [0.61] | 9.53 [0.38] |
| 12 | 13 | 12 | .688-24 UNEF | 19.66 [0.77] | 12.70 [0.50] |
| 14 | 15 | 14 | .812-20 UNEF | 21.29 [0.84] | 15.88 [0.63] |
| 16 | 17 | 16 | .938-20 UNEF | 24.46 [0.96] | 19.05 [0.75] |
| 18 | 19 | 18 | 1.062-18 UNEF | 26.47 [1.04] | 20.62 [0.81] |
| 20 | 21 | 20 | 1.188-18 UNEF | 30.91 [1.22] | 23.80 [0.94] |
| 22 | 23 | 22 | 1.312-18 UNEF | 34.42 [1.36] | 26.97 [1.06] |
| 24 | 25 | 24 | 1.438-18 UNEF | 36.65 [1.44] | 30.18 [1.19] |

### Molded Part Selection Guide (Spin-Coupling)

| Order No. | Standard K Parts | | | Low-Profile D Parts | | |
|---|---|---|---|---|---|---|
| | Straight Part No. | 90° Part No. | Cable OD (Min.) | Straight Part No. | 90° Part No. | Cable OD (Min.) |
| 08 | 202W232 | — | 4.3 [0.19] | — | — | — |
| 08 | 202K121 | 222K121 | 5.6 [0.22] | 202D211 | 222D211 | 6.4 [0.25] |
| 10 | 202K132 | 222K132 | 5.9 [0.23] | 202D221 | 222D221 | 7.4 [0.29] |
| 12, 14 | 202K142 | 222K142 | 7.1 [0.28] | 202D232 | 222D232 | 8.4 [0.33] |
| 16, 18 | 202K153 | 222K152 | 8.4 [0.33] | 202D242 | 222D242 | 9.7 [0.38] |
| 20, 22 | 202K163 | 222K163 | 9.9 [0.39] | 202D253 | 222D253 | 10.5 [0.41] |
| 24, 28 | 202K174 | 222K174 | 15.7 [0.62] | 202D263 | 222D263 | 12.2 [0.48] |

### Uniboot Parts

| Order No. | Part No. | Cable OD (Min.) |
|---|---|---|
| 08 | 202C611 | 4.8 [0.19] |
| 10, 12 | 202C621 | 8.1 [0.32] |
| 14, 16 | 202C632 | 12.7 [0.50] |
| 18, 20 | 202C642 | 17.5 [0.69] |
| 22, 24 | 202C653 | 22.4 [0.88] |

| Available in: | Americas | Europe | Asia Pacific |
|---|---|---|---|
| | ■ | ■ | ■ |





Catalog 1654025
Revised 3-13

www.te.com

Dimensions are shown for reference purposes only. Specifications subject to change.

Dimensions are in millimeters unless otherwise specified.

USA: +1 800 522 6752
Asia Pacific: +86 0 400 820 6015
UK: +44 800 267 666

For additional support numbers please visit www.te.com

## Code 41 MIL-C-38999 Series I and II (Continued)

### Tinel-Lock Adapters

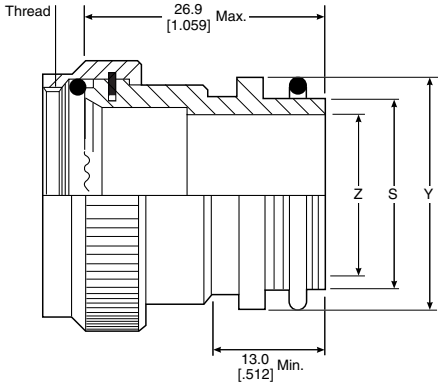


TXR41XX00-XXXXXX

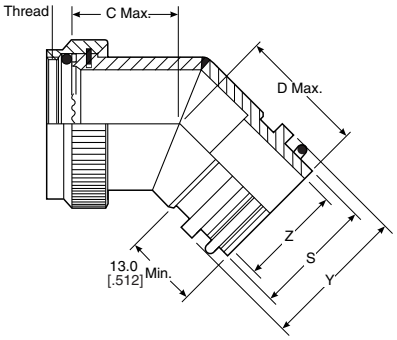


TXR41XX45-XXXXXX

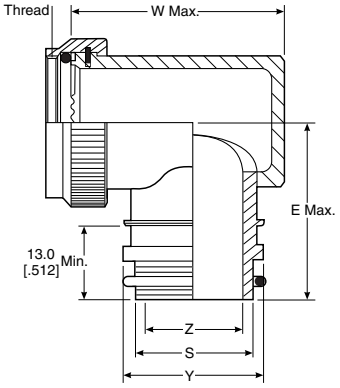


TXR41XX90-XXXXXX

### Table of Dimensions

| Order No. | Shell Size Series I | Series II | Max. Entry* Size Type 1 | A Unified Thread Class 2B | Dimensions | | |
|---|---|---|---|---|---|---|---|
| | | | | | C Max. | D Max. | E Max. |
| 08 | 9 | 8 | — | .438-28 UNEF | 17.5 [0.69] | 23.1 [0.91] | 29.2 [1.15] |
| 10 | 11 | 10 | — | .562-24 UNEF | 18.3 [0.72] | 23.6 [0.93] | 30.7 [1.21] |
| 12 | 13 | 12 | 08 | .688-24 UNEF | 18.8 [0.74] | 24.4 [0.96] | 32.5 [1.28] |
| 14 | 15 | 14 | 10 | .812-20 UNEF | 19.3 [0.76] | 24.9 [0.98] | 34.0 [1.34] |
| 16 | 17 | 16 | 12 | .938-20 UNEF | 20.1 [0.79] | 25.4 [1.00] | 35.6 [1.40] |
| 18 | 19 | 18 | 13 | 1.062-18 UNEF | 20.6 [0.81] | 26.2 [1.03] | 37.1 [1.46] |
| 20 | 21 | 20 | 15 | 1.188-18 UNEF | 21.3 [0.84] | 26.9 [1.06] | 38.9 [1.53] |
| 22 | 23 | 22 | 16 | 1.312-18 UNEF | 22.1 [0.87] | 27.4 [1.08] | 40.4 [1.59] |
| 24 | 25 | 24 | 18 | 1.438-18 UNEF | 22.6 [0.89] | 28.2 [1.11] | 41.9 [1.65] |

*For larger than maximum type 1 entry sizes, a two-piece adapter will be supplied. Contact TE for information.

| Available in: | Americas | Europe | Asia Pacific |
|---|---|---|---|
| | ■ | ■ | ■ |



Catalog 1654025
Revised 3-13

www.te.com

Dimensions are shown for reference purposes only. Specifications subject to change.

Dimensions are in millimeters unless otherwise specified.

USA: +1 800 522 6752
Asia Pacific: +86 0 400 820 6015
UK: +44 800 267 666

For additional support numbers please visit www.te.com

## Code 41 MIL-C-38999 Series I and II (Continued)

### Tinel-Lock Adapters
(continued)

### Entry Size Dimensions

| Entry Size | Dimensions | | | |
|---|---|---|---|---|
| | Z +0.25–0.5 | S Diameter (Min.–Max.) | Y ±0.38 | W Max. |
| 04 | 6.35 [0.25] | 9.39–9.56 [0.37–0.38] | 13.97 [0.55] | 27.2 [1.07] |
| 05 | 7.92 [0.31] | 10.97–11.13 [0.43–0.44] | 15.54 [0.61] | 28.7 [1.13] |
| 06 | 9.52 [0.37] | 12.57–12.73 [0.49–0.50] | 17.14 [0.67] | 30.2 [1.19] |
| 07 | 11.09 [0.44] | 14.12–14.31 [0.55–0.56] | 18.71 [0.74] | 31.8 [1.25] |
| 08 | 12.70 [0.50] | 15.72–15.91 [0.62–0.63] | 20.32 [0.80] | 33.5 [1.32] |
| 10 | 15.87 [0.62] | 18.84–19.11 [0.74–0.75] | 23.49 [0.92] | 36.6 [1.44] |
| 12 | 19.05 [0.75] | 22.02–22.28 [0.87–0.88] | 26.67 [1.05] | 39.9 [1.57] |
| 14 | 22.23 [0.88] | 25.17–25.46 [0.99–1.00] | 29.84 [1.17] | 42.9 [1.69] |
| 16 | 25.4 [1.00] | 28.34–28.63 [1.12–1.13] | 33.02 [1.30] | 46.2 [1.82] |
| 18 | 28.57 [1.12] | 31.52–31.81 [1.24–1.25] | 36.19 [1.42] | 49.3 [1.94] |

### Molded Part Selection Guide (Tinel)

| Order No. | Standard K Parts | | | Low-Profile D Parts | | |
|---|---|---|---|---|---|---|
| | Straight Part No. | 90° Part No. | Cable OD (Min.) | Straight Part No. | 90° Part No. | Cable OD (Min.) |
| 04 | 202K232 | — | 3.3 [0.1] | — | — | — |
| 04 | 202W232 | — | 4.3 [0.2] | — | — | — |
| 04 | 202K121 | 222K121 | 5.6 [0.2] | 202D211 | 222D211 | 6.4 [0.3] |
| 05, 06 | 202K132 | 222K132 | 5.9 [0.2] | 202D221 | 222D221 | 7.4 [0.3] |
| 07, 08 | 202K142 | 222K142 | 7.1 [0.3] | 202D232 | 222D232 | 8.4 [0.3] |
| 10, 12 | 202K153 | 222K152 | 8.4 [0.3] | 202D242 | 222D242 | 9.7 [0.4] |
| 14, 16 | 202K163 | 222K163 | 9.9 [0.4] | 202D253 | 222D253 | 10.5 [0.4] |
| 18, 20, 22 | 202K174 | 222K174 | 15.7 [0.6] | 202D263 | 222D263 | 12.2 [0.5] |
| 24 | 202K185 | 222K185 | 16.8 [0.7] | — | — | — |

### Uniboot Parts

| Order No. | Part No. | Cable OD (Min.) |
|---|---|---|
| 04 | 202C611 | 4.8 [0.19] |
| 05, 06, 07 | 202C621 | 8.1 [0.32] |
| 08, 10, 12 | 202C632 | 12.7 [0.50] |
| 12, 14, 16 | 202C642 | 17.5 [0.69] |
| 16, 18, 20, 22 | 202C653 | 22.4 [0.88] |
| 24 | 202C663 | 22.9 [0.90] |





Catalog 1654025
Revised 3-13

www.te.com

Dimensions are shown for reference purposes only. Specifications subject to change.

Dimensions are in millimeters unless otherwise specified.

USA: +1 800 522 6752
Asia Pacific: +86 0 400 820 6015
UK: +44 800 267 666

For additional support numbers please visit www.te.com

## Code 41 MIL-C-38999 Series I and II (Continued)

### CRES-Lock Adapters (USA)
### BND Adapters (Europe)

### Code 41 Band Strap Adapter

**Notes:**
1. This product is designed to terminate a braided cable shield by means of a band strap and a heat shrinkable lipped boot to a connector.
2. See CH00-0250-016 for ordering information, modifications and additional dimensions.
3. See drawing BND-XX25S for band strap dimensions and information.
4. Adapter to be permanently marked with code identification number and full part number (e.g. 06090-BND41AB00-1812). Band strap shall bear no part marking.
5. All entry sizes are shown in Table II. Maximum entry sizes are as shown in Table I. For larger entry sizes than the maximum, a Type II adapter may be supplied. See CH00-0250-016 for further details.
6. Adapter mates to: MIL-C-38999 Series I and II, Class E and T, MS27466, MS27467, MS27468, MS27472, MS27473, MS27474, MS27479, MS27480, MS27481, MS27484, MS27497, MS27652, MS27653 and MS27656 Connectors.

**For additional codes available, contact TE.**

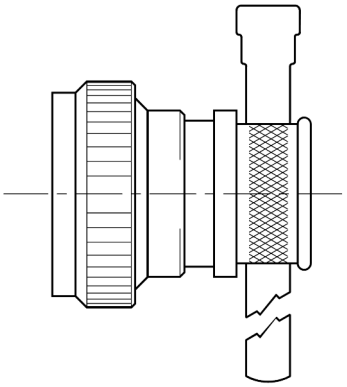

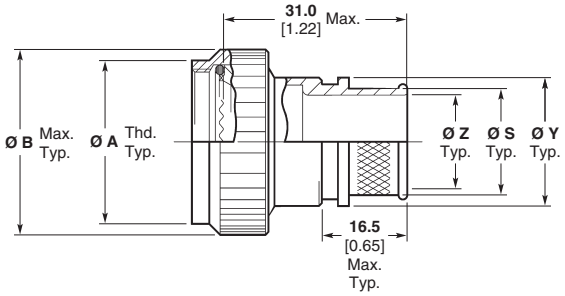


**Straight Adapter**
**Code 00**

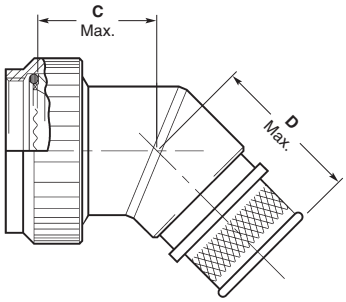


**45° Adapter**
**Code 45**

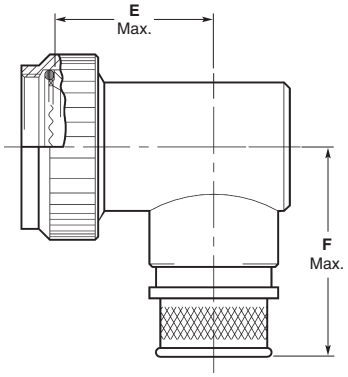


**90° Adapter**
**Code 90**

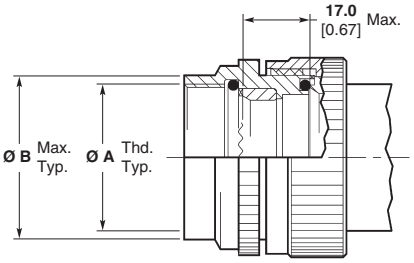


**Type II Modification**
**(See Note 5)**

| Available in: | Americas | Europe | Asia Pacific |
|---|---|---|---|
| | ■ | ■ | ■ |



Catalog 1654025
Revised 3-13

www.te.com

Dimensions are shown for reference purposes only. Specifications subject to change.

Dimensions are in millimeters unless otherwise specified.

USA: +1 800 522 6752
Asia Pacific: +86 0 400 820 6015
UK: +44 800 267 666

For additional support numbers please visit www.te.com

## Code 41 MIL-C-38999 Series I and II (Continued)

### CRES-Lock Adapters (USA) BND Adapters (Europe) (continued)

### Code 41 Band Strap Adapter (Continued)

**Table I**

| Order Number | Shell Size[2] Series I | Shell Size[2] Series II | Entry Size Max. Type I[1] | Ø A Unified Thread UNEF Class 2B | Ø B Max. | Ø B Max.[3] | C Max. | D Max. | F Max. |
|---|---|---|---|---|---|---|---|---|---|
| 08 | 9 | 08 | 04 | 0.4375–28 | **19.1** 0.75 | **24.6** 0.97 | **17.5** 0.69 | **27.2** 1.07 | **33.3** 1.31 |
| 10 | 11 | 10 | 06 | 0.5625–24 | **20.8** 0.85 | **27.0** 1.06 | **18.3** 0.72 | **27.7** 1.09 | **34.8** 1.37 |
| 12 | 13 | 12 | 08 | 0.6875–24 | **25.4** 1.00 | **31.0** 1.22 | **18.8** 0.74 | **28.4** 1.12 | **36.6** 1.44 |
| 14 | 15 | 14 | 10 | 0.8125–20 | **27.2** 1.10 | **35.8** 1.41 | **19.3** 0.76 | **29.0** 1.14 | **38.1** 1.50 |
| 16 | 17 | 16 | 12 | 0.9375–20 | **31.8** 1.25 | **37.3** 1.47 | **20.1** 0.79 | **29.5** 1.16 | **39.6** 1.56 |
| 18 | 19 | 18 | 13 | 1.0625–18 | **35.6** 1.40 | **40.6** 1.60 | **20.6** 0.81 | **30.2** 1.19 | **41.1** 1.62 |
| 20 | 21 | 20 | 15 | 1.1875–18 | **38.1** 1.50 | **44.5** 1.75 | **21.3** 0.84 | **31.0** 1.22 | **42.9** 1.69 |
| 22 | 23 | 22 | 16 | 1.3125–18 | **41.9** 1.65 | **46.8** 1.84 | **22.1** 0.87 | **31.5** 1.24 | **44.5** 1.75 |
| 24 | 25 | 24 | 18 | 1.4375–18 | **44.5** 1.75 | **51.6** 2.03 | **22.6** 0.89 | **32.3** 1.27 | **46.0** 1.81 |

1. All entry sizes are shown in Table II. Maximum entry sizes are as shown in Table I. For larger entry sizes than the maximum, a Type II adapter may be supplied. See CH00-0250-016 for further details.
2. Adapter mates to: MIL-C-38999 Series I and II, Class E and T, MS27466, MS27467, MS27468, MS27472, MS27473, MS27474, MS27479, MS27480, MS27481, MS27484, MS27497, MS27652, MS27653 and MS27656 Connectors.
3. These dimensions apply if a self-locking coupling nut is used, modification code “S”.

**Table II**

| Entry Size | Ø Z +0.25/-0.50 [+0.010/-0.020] | Ø S ±0.51 [±0.020] | Ø Y ±0.38 [±0.015] | E Max. |
|---|---|---|---|---|
| 03 | **4.75** 0.188 | **7.92** 0.312 | **11.10** 0.438 | **15.3** 0.60 |
| 04 | **6.35** 0.250 | **9.52** 0.375 | **12.70** 0.500 | **16.3** 0.64 |
| 05 | **7.92** 0.312 | **11.12** 0.438 | **14.30** 0.563 | **16.8** 0.66 |
| 06 | **9.52** 0.375 | **12.70** 0.500 | **15.88** 0.625 | **17.8** 0.70 |
| 07 | **11.12** 0.438 | **14.30** 0.562 | **17.50** 0.689 | **18.8** 0.74 |
| 08 | **12.70** 0.500 | **15.88** 0.625 | **19.05** 0.750 | **19.3** 0.76 |
| 09 | **14.30** 0.562 | **17.50** 0.688 | **20.65** 0.813 | **20.3** 0.80 |
| 10 | **15.88** 0.625 | **19.05** 0.750 | **22.23** 0.875 | **21.3** 0.84 |
| 11 | **17.50** 0.688 | **20.65** 0.812 | **23.80** 0.938 | **21.8** 0.86 |
| 12 | **19.05** 0.750 | **22.23** 0.875 | **25.40** 1.000 | **22.9** 0.90 |
| 13 | **20.65** 0.812 | **23.83** 0.938 | **27.00** 1.063 | **23.8** 0.94 |
| 14 | **22.23** 0.875 | **25.40** 1.000 | **30.16** 1.189 | **24.4** 0.96 |

**Table II** (Continued)

| Entry Size | Ø Z +0.25/-0.50 [+0.010/-0.020] | Ø S ±0.51 [±0.020] | Ø Y ±0.38 [±0.015] | E Max. |
|---|---|---|---|---|
| 15 | **23.83** .0938 | **27.00** 1.062 | **31.75** 1.250 | **25.4** 1.00 |
| 16 | **25.40** 1.000 | **28.58** 1.125 | **33.34** 1.313 | **25.9** 1.02 |
| 18 | **28.58** 1.125 | **31.75** 1.250 | **36.51** 1.438 | **27.4** 1.08 |
| 20 | **31.75** 1.250 | **34.90** 1.375 | **39.69** 1.563 | N/A |
| 22 | **34.90** 1.375 | **38.10** 1.500 | **42.86** 1.688 | N/A |
| 24 | **38.10** 1.500 | **41.28** 1.625 | **46.83** 1.844 | N/A |
| 26 | **41.28** 1.625 | **44.45** 1.750 | **49.61** 1.953 | N/A |
| 28 | **44.45** 1.750 | **47.63** 1.875 | **52.78** 2.078 | N/A |
| 30 | **47.65** 1.875 | **50.80** 2.000 | **56.36** 2.219 | N/A |
| 32 | **50.80** 2.000 | **54.00** 2.125 | **59.53** 2.344 | N/A |
| 34 | **54.00** 2.125 | **57.15** 2.250 | **62.71** 2.469 | N/A |





Catalog 1654025
Revised 3-13

www.te.com

Dimensions are shown for reference purposes only. Specifications subject to change.

Dimensions are in millimeters unless otherwise specified.

USA: +1 800 522 6752
Asia Pacific: +86 0 400 820 6015
UK: +44 800 267 666

For additional support numbers please visit www.te.com

## Code 54 MIL-C-5015 (MS3400), MIL-C-26482 Series 2, MIL-C-83723 Series I and III, MIL-C-81703 Series III

### Braided Adapters

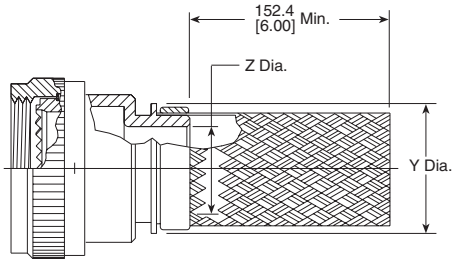


203M0XX-XXXXX

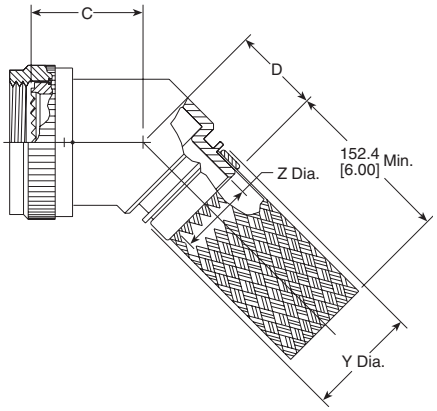


203M1XX-XXXXX

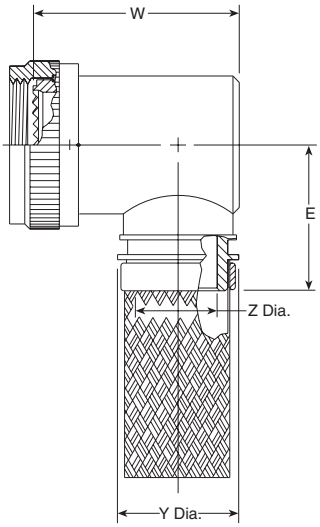


203M2XX-XXXXX

### Table of Dimensions

| Order No. | Shell Size | | Max. Entry Size Type 1* | Thread | Dimensions | | |
|---|---|---|---|---|---|---|---|
| | MIL-C-81703 | MIL-C-5015 | | | C Max. | D Max. | E Max. |
| 03 | 3 | — | 04 | .562-24 UNEF | 19.10 [0.75] | 23.10 [0.91] | 28.70 [1.13] |
| 08 | — | 8 & 8S | 04 | .500-20 UNF | 19.10 [0.75] | 23.10 [0.91] | 27.90 [1.10] |
| 10 | — | 10, 10S & 10 SL | 06 | .625-24 UNEF | 19.60 [0.77] | 23.60 [0.93] | 29.50 [1.16] |
| 12 | 7 | 12 & 12S | 08 | .750-20 UNEF | 20.30 [0.80] | 24.10 [0.95] | 31.00 [1.22] |
| 14 | 12 | 14 & 14S | 08 | .875-20 UNEF | 20.80 [0.82] | 24.60 [0.97] | 32.50 [1.28] |
| 16 | 19 | 16 & 16S | 10 | 1.000-20 UNEF | 21.30 [0.84] | 25.40 [1.00] | 34.30 [1.35] |
| 18 | 27 | 18 | 12 | 1.062-18 UNEF | 21.80 [0.86] | 25.70 [1.01] | 35.60 [1.40] |
| 20 | 37 | 20 | 14 | 1.188-18 UNEF | 22.40 [0.88] | 26.40 [1.04] | 37.10 [1.46] |
| 22 | — | 22 | 16 | 1.312-18 UNEF | 23.10 [0.91] | 26.90 [1.06] | 38.90 [1.53] |
| 24 | — | 24 | 18 | 1.438-18 UNEF | 23.60 [0.93] | 27.70 [1.09] | 40.40 [1.59] |
| 28 | — | 28 | 22 | 1.750-18 UNS | 24.90 [0.98] | 29.20 [1.15] | 45.20 [1.78] |
| 32 | — | 32 | 24 | 2.000-18 UNS | 26.20 [1.03] | 30.50 [1.20] | 48.30 [1.90] |
| 36 | — | 36 | 24 | 2.250-16 UN | 27.40 [1.08] | 31.80 [1.25] | 51.60 [2.03] |
| 40 | — | 40 | 24 | 2.500-16 UN | 29.00 [1.14] | 33.30 [1.31] | 54.60 [2.15] |
| 44 | — | 44 | 24 | 2.750-16 UN | 30.20 [1.19] | 34.50 [1.36] | 57.90 [2.28] |
| 48 | — | 48 | 24 | 3.000-16 UN | 31.50 [1.24] | 35.10 [1.38] | 61.00 [2.40] |
| 61 | 61 | — | 18 | 1.500-18 UNEF | 23.90 [0.94] | 27.90 [1.10] | 41.10 [1.62] |

*For larger than maximum type 1 entry sizes, a two-piece adapter will be supplied. Contact TE for information.

| Available in: | Americas | Europe | Asia Pacific |
|---|---|---|---|
| | ■ | ■ | ■ |



Catalog 1654025
Revised 3-13

www.te.com

Dimensions are shown for reference purposes only. Specifications subject to change.

Dimensions are in millimeters unless otherwise specified.

USA: +1 800 522 6752
Asia Pacific: +86 0 400 820 6015
UK: +44 800 267 666

For additional support numbers please visit www.te.com

## Code 54 MIL-C-5015 (MS3400), MIL-C-26482 Series 2, MIL-C-83723 Series I and III, MIL-C-81703 Series III (Continued)

### Braided Adapters
(continued)

### Entry Size Dimensions

| Entry Size | Dimensions | | | |
|---|---|---|---|---|
| | Z +0.25–0.5 | S Diameter (Min.–Max.) | Y ±0.38 | W Max. |
| 04 | 6.35 [0.25] | 9.39–9.56 [0.37–0.38] | 13.97 [0.55] | 28.4 [1.12] |
| 05 | 7.92 [0.31] | 10.97–11.13 [0.43–0.44] | 15.54 [0.61] | 30.2 [1.19] |
| 06 | 9.52 [0.37] | 12.57–12.73 [0.49–0.50] | 17.14 [0.67] | 31.8 [1.25] |
| 07 | 11.09 [0.44] | 14.12–14.31 [0.55–0.56] | 18.71 [0.74] | 33.3 [1.31] |
| 08 | 12.7 [0.50] | 15.72–15.91 [0.62–0.63] | 20.32 [0.80] | 35.1 [1.38] |
| 10 | 15.87 [0.62] | 18.84–19.11 [0.74–0.75] | 23.49 [0.92] | 38.1 [1.50] |
| 12 | 19.05 [0.75] | 22.02–22.28 [0.87–0.88] | 26.67 [1.05] | 41.1 [1.62] |
| 14 | 22.23 [0.88] | 25.17–25.46 [0.99–1.00] | 29.84 [1.17] | 44.5 [1.75] |
| 16 | 25.4 [1.00] | 28.34–28.63 [1.12–1.13] | 33.02 [1.30] | 47.8 [1.88] |
| 18 | 28.57 [1.12] | 31.52–31.81 [1.24–1.25] | 36.19 [1.42] | 50.8 [2.00] |
| 20 | 31.75 [1.25] | 34.69-34.98 [1.37-1.38] | 39.37 [1.55] | 53.8 [2.12] |
| 22 | 34.93 [1.38] | 37.79-38.15 [1.49-1.50] | 42.55 [1.68] | 57.2 [2.25] |
| 24 | 38.1 [1.50] | 40.97-41.33 [1.61-1.63] | 45.72 [1.80] | 60.5 [2.38] |

### Molded Part Selection Guide (Braided)

| Tinel-Lock Entry Size | Standard K Parts | | | Low-Profile D Parts | | |
|---|---|---|---|---|---|---|
| | Straight Part No. | 90° Part No. | Cable OD (Min.) | Straight Part No. | 90° Part No. | Cable OD (Min.) |
| 04 | 202K232 | — | 3.3 [0.1] | — | — | — |
| 04 | 202W232 | — | 4.3 [0.2] | — | — | — |
| 04 | 202K121 | 222K121 | 5.6 [0.2] | 202D211 | 222D211 | 6.4 [0.3] |
| 05, 06 | 202K132 | 222K132 | 5.9 [0.2] | 202D221 | 222D221 | 7.4 [0.3] |
| 07, 08 | 202K142 | 222K142 | 7.1 [0.3] | 202D232 | 222D232 | 8.4 [0.3] |
| 10, 12 | 202K153 | 222K152 | 8.4 [0.3] | 202D242 | 222D242 | 9.7 [0.4] |
| 14, 16 | 202K163 | 222K163 | 9.9 [0.4] | 202D253 | 222D253 | 10.5 [0.4] |
| 18, 20, 22 | 202K174 | 222K174 | 15.7 [0.6] | 202D263 | 222D263 | 12.2 [0.5] |
| 24 | 202K185 | 222K185 | 16.8 [0.7] | — | — | — |

### Uniboot Parts

| Tinel-Lock Entry Size | Part No. | Cable OD (Min.) |
|---|---|---|
| 04 | 202C611 | 4.8 [0.19] |
| 05, 06, 07 | 202C621 | 8.1 [0.32] |
| 08, 10, 12 | 202C632 | 12.7 [0.50] |
| 12, 14, 16 | 202C642 | 17.5 [0.69] |
| 16, 18, 20, 22 | 202C653 | 22.4 [0.88] |
| 24 | 202C663 | 22.9 [0.90] |





Catalog 1654025
Revised 3-13

www.te.com

Dimensions are shown for reference purposes only. Specifications subject to change.

Dimensions are in millimeters unless otherwise specified.

USA: +1 800 522 6752
Asia Pacific: +86 0 400 820 6015
UK: +44 800 267 666

For additional support numbers please visit www.te.com

## Code 54 MIL-C-5015 (MS3400), MIL-C-26482 Series 2, MIL-C-83723 Series I and III, MIL-C-81703 Series III (Continued)

### Solid Adapters

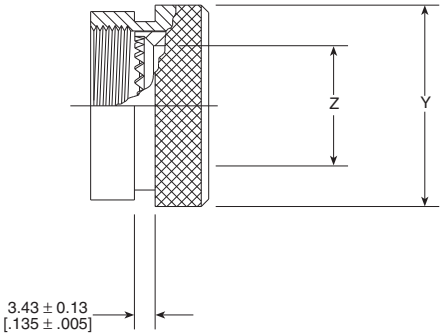


201M9XX-XXX

### Table of Dimensions

| Order No. | Shell Size | | Thread | Dimensions | |
|---|---|---|---|---|---|
| | MIL-C-81703 | MIL-C-5015 | | Y +0.00-0.51 Dia. | Z Dia. Min. |
| 03 | 3 | — | .562-24 UNEF | 13.54 [0.53] | 6.35 [0.25] |
| 08 | — | 8 & 8S | .500-20 UNF | 13.54 [0.53] | 6.35 [0.25] |
| 10 | — | 10, 10S & 10SL | .625-24 UNEF | 15.37 [0.61] | 9.02 [0.36] |
| 12 | 7 | 12 & 12S | .750-20 UNEF | 19.66 [0.77] | 12.47 [0.49] |
| 14 | 12 | 14 & 14S | .875-20 UNEF | 21.29 [0.84] | 14.35 [0.56] |
| 16 | 19 | 16 & 16S | 1.000-20 UNEF | 24.46 [0.96] | 17.53 [0.69] |
| 18 | 27 | 18 | 1.062-18 UNEF | 26.47 [1.04] | 19.53 [0.77] |
| 20 | 37 | 20 | 1.188-18 UNEF | 30.91 [1.22] | 22.71 [0.89] |
| 22 | — | 22 | 1.312-18 UNEF | 34.42 [1.36] | 25.88 [1.02] |
| 24 | — | 24 | 1.438-18 UNEF | 36.65 [1.44] | 28.80 [1.13] |
| 28 | — | 28 | 1.750-18 UNS | 43.41 [1.71] | 34.77 [1.37] |
| 32 | — | 32 | 2.000-18 UNS | 48.74 [1.92] | 41.02 [1.61] |
| 36 | — | 36 | 2.250-16 UN | 55.09 [2.17] | 46.48 [1.83] |
| 40 | — | 40 | 2.500-16 UN | 61.01 [2.40] | 51.94 [2.04] |
| 44 | — | 44 | 2.750-16 UN | 67.49 [2.66] | 58.42 [2.30] |
| 48 | — | 48 | 3.000-16 UN | 73.84 [2.91] | 64.77 [2.55] |
| 61 | 61 | — | 1.500-18 UNEF | 36.65 [1.44] | 29.82 [1.17] |

### Molded Part Selection Guide (Solid)

| Order No. | Standard K Parts | | | Low-Profile D Parts | | |
|---|---|---|---|---|---|---|
| | Straight Part No. | 90° Part No. | Cable OD (Min.) | Straight Part No. | 90° Part No. | Cable OD (Min.) |
| 03 | 202K132 | 222K132 | 5.9 [0.23] | 202D221 | 222D221 | 7.4 [0.29] |
| 10 | 202K142 | 222K142 | 7.1 [0.28] | 202D232 | 222D232 | 8.4 [0.33] |
| 12, 14 | 202K153 | 222K152 | 8.4 [0.33] | 202D242 | 222D242 | 9.7 [0.38] |
| 16, 18, 19, 27 | 202K163 | 222K163 | 9.9 [0.39] | 202D253 | 222D253 | 10.5 [0.41] |
| 20, 22, 24, 28, 37 | 202K174 | 222K174 | 15.7 [0.62] | 202D263 | 222D263 | 12.2 [0.48] |
| 28, 32 | 202K185 | 222K185 | 16.8 [0.66] | — | — | — |

### Uniboot Parts

| Order No. | Part No. | Cable OD (Min.) |
|---|---|---|
| 08 | 202C621 | 8.1 [0.32] |
| 7, 10, 12 | 202C632 | 12.7 [0.50] |
| 12, 14 | 202C642 | 17.5 [0.69] |
| 24, 27, 37, 61 | 202C653 | 22.4 [0.88] |

| Available in: | Americas | Europe | Asia Pacific |
|---|---|---|---|
| | ■ | ■ | ■ |



Catalog 1654025
Revised 3-13

www.te.com

Dimensions are shown for reference purposes only. Specifications subject to change.

Dimensions are in millimeters unless otherwise specified.

USA: +1 800 522 6752
Asia Pacific: +86 0 400 820 6015
UK: +44 800 267 666

For additional support numbers please visit www.te.com

## Code 54 MIL-C-5015 (MS3400), MIL-C-26482 Series 2, MIL-C-83723 Series I and III, MIL-C-81703 Series III (Continued)

### Spin-Coupling Adapters

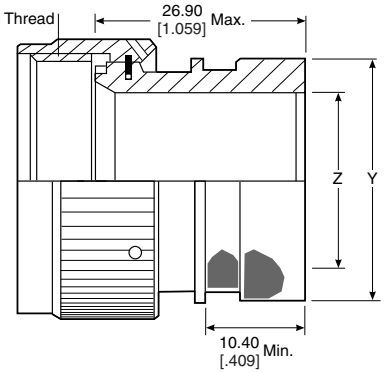


201M1XX-XXX

### Table of Dimensions

| Order No. | Shell Size | | Thread | Dimensions | |
|---|---|---|---|---|---|
| | MIL-C-81703 | MIL-C-5015 | | Y +0.00-0.51 Dia. | Z Dia. Min. |
| 03 | 3 | — | .562-24 UNEF | 13.54 [0.53] | 6.35 [0.25] |
| 08 | — | 8 & 8S | .500-20 UNF | 13.54 [0.53] | 6.35 [0.25] |
| 10 | — | 10, 10S & 10SL | .625-24 UNEF | 15.37 [0.61] | 9.02 [0.36] |
| 12 | 7 | 12 & 12S | .750-20 UNEF | 19.66 [0.77] | 12.47 [0.49] |
| 14 | 12 | 14 & 14S | .875-20 UNEF | 21.29 [0.84] | 14.35 [0.56] |
| 16 | 19 | 16 & 16S | 1.000-20 UNEF | 24.46 [0.96] | 17.53 [0.69] |
| 18 | 27 | 18 | 1.062-18 UNEF | 26.47 [1.04] | 19.53 [0.77] |
| 20 | 37 | 20 | 1.188-18 UNEF | 30.91 [1.22] | 22.71 [0.89] |
| 22 | — | 22 | 1.312-18 UNEF | 34.42 [1.36] | 25.88 [1.02] |
| 24 | — | 24 | 1.438-18 UNEF | 36.65 [1.44] | 28.80 [1.13] |
| 28 | — | 28 | 1.750-18 UNS | 43.41 [1.71] | 34.77 [1.37] |
| 32 | — | 32 | 2.000-18 UNS | 48.74 [1.92] | 41.02 [1.61] |
| 36 | — | 36 | 2.250-16 UN | 55.09 [2.17] | 46.48 [1.83] |
| 40 | — | 40 | 2.500-16 UN | 61.01 [2.40] | 51.94 [2.04] |
| 44 | — | 44 | 2.750-16 UN | 67.49 [2.66] | 58.42 [2.30] |
| 48 | — | 48 | 3.000-16 UN | 73.84 [2.91] | 64.77 [2.55] |
| 61 | 61 | — | 1.500-18 UNEF | 36.65 [1.44] | 29.82 [1.17] |

### Molded Part Selection Guide (Spin-coupling)

| Order No. | Standard K Parts | | | Low-Profile D Parts | | |
|---|---|---|---|---|---|---|
| | Straight Part No. | 90° Part No. | Cable OD (Min.) | Straight Part No. | 90° Part No. | Cable OD (Min.) |
| 03, 08 | 202W232 | — | 4.3 [0.19] | — | — | — |
| 03, 08 | 202K121 | 222K121 | 5.6 [0.22] | 202D211 | 222D211 | 6.4 [0.25] |
| 10, 11 | 202K132 | 222K132 | 5.9 [0.23] | 202D221 | 222D221 | 7.4 [0.29] |
| 12, 14 | 202K142 | 222K142 | 7.1 [0.28] | 202D232 | 222D232 | 8.4 [0.33] |
| 16, 18 | 202K153 | 222K152 | 8.4 [0.33] | 202D242 | 222D242 | 9.7 [0.38] |
| 20, 22 | 202K163 | 222K163 | 9.9 [0.39] | 202D253 | 222D253 | 10.5 [0.41] |
| 24, 28, 61 | 202K174 | 222K174 | 15.7 [0.62] | 202D263 | 222D263 | 12.2 [0.48] |
| 32, 36 | 202K185 | 222K185 | 16.8 [0.66] | — | — | — |

### Uniboot Parts

| Order No. | Part No. | Cable OD (Min.) |
|---|---|---|
| 08 | 202C621 | 8.1 [0.32] |
| 7, 10, 12 | 202C632 | 12.7 [0.50] |
| 12, 14 | 202C642 | 17.5 [0.69] |
| 24, 27, 37, 61 | 202C653 | 22.4 [0.88] |

| Available in: | Americas | Europe | Asia Pacific |
|---|---|---|---|
| | ■ | ■ | ■ |







Dimensions are shown for reference purposes only. Specifications subject to change.

Dimensions are in millimeters unless otherwise specified.

USA: +1 800 522 6752
Asia Pacific: +86 0 400 820 6015
UK: +44 800 267 666

For additional support numbers please visit www.te.com

## Code 54 MIL-C-5015 (MS3400), MIL-C-26482 Series 2, MIL-C-83723 Series I and III, MIL-C-81703 Series III (Continued)

### Tinel-Lock Adapters

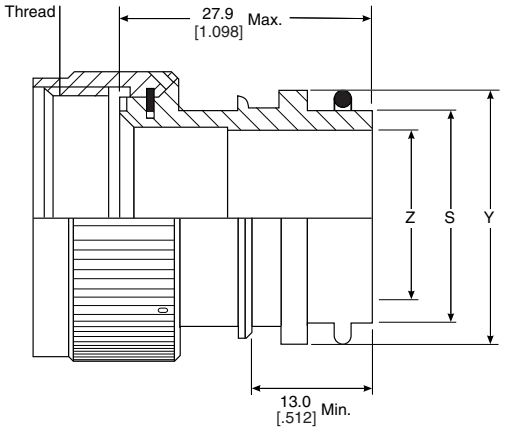


**TXR54XX00-XXXXXX**

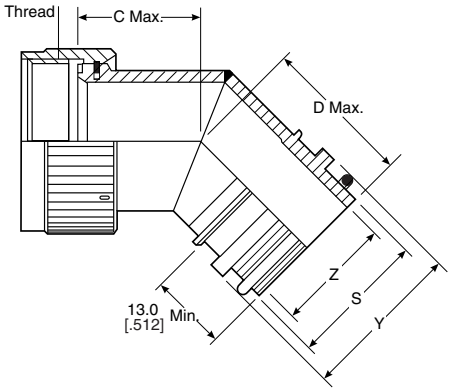


**TXR54XX45-XXXXXX**

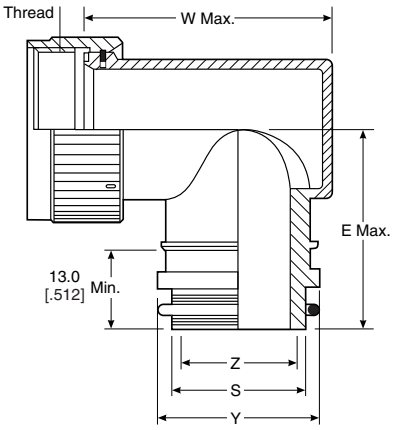


**TXR54XX90-XXXXXX**

| Available in: | Americas | Europe | Asia Pacific |
|---|---|---|---|
| | ■ | ■ | ■ |



Catalog 1654025
Revised 3-13

www.te.com

Dimensions are shown for reference purposes only. Specifications subject to change.

Dimensions are in millimeters unless otherwise specified.

USA: +1 800 522 6752
Asia Pacific: +86 0 400 820 6015
UK: +44 800 267 666

For additional support numbers please visit www.te.com

## Code 54 MIL-C-5015 (MS3400), MIL-C-26482 Series 2, MIL-C-83723 Series I and III, MIL-C-81703 Series III (Continued)

### Tinel-Lock Adapters
(continued)

### Table of Dimensions

| Order No. | Shell Size MIL-C-81703 | Shell Size MIL-C-5015 | Max. Entry Size Type 1* | Thread | Dimensions C Max. | Dimensions D Max. | Dimensions E Max. |
|---|---|---|---|---|---|---|---|
| 03 | 3 | — | 04 | .562-24 UNEF | 19.10 [0.75] | 23.10 [0.91] | 28.70 [1.13] |
| 08 | — | 8 & 8S | 04 | .500-20 UNF | 19.10 [0.75] | 23.10 [0.91] | 27.90 [1.10] |
| 10 | — | 10, 10S & 10 SL | 06 | .625-24 UNEF | 19.60 [0.77] | 23.60 [0.93] | 29.50 [1.16] |
| 12 | 7 | 12 & 12S | 08 | .750-20 UNEF | 20.30 [0.80] | 24.10 [0.95] | 31.00 [1.22] |
| 14 | 12 | 14 & 14S | 08 | .875-20 UNEF | 20.80 [0.82] | 24.60 [0.97] | 32.50 [1.28] |
| 16 | 19 | 16 & 16S | 10 | 1.000-20 UNEF | 21.30 [0.84] | 25.40 [1.00] | 34.30 [1.35] |
| 18 | 27 | 18 | 12 | 1.062-18 UNEF | 21.80 [0.86] | 25.70 [1.01] | 35.60 [1.40] |
| 20 | 37 | 20 | 14 | 1.188-18 UNEF | 22.40 [0.88] | 26.40 [1.04] | 37.10 [1.46] |
| 22 | — | 22 | 16 | 1.312-18 UNEF | 23.10 [0.91] | 26.90 [1.06] | 38.90 [1.53] |
| 24 | — | 24 | 18 | 1.438-18 UNEF | 23.60 [0.93] | 27.70 [1.09] | 40.40 [1.59] |
| 28 | — | 28 | 22 | 1.750-18 UNS | 24.90 [0.98] | 29.20 [1.15] | 45.20 [1.78] |
| 32 | — | 32 | 24 | 2.000-18 UNS | 26.20 [1.03] | 30.50 [1.20] | 48.30 [1.90] |
| 36 | — | 36 | 24 | 2.250-16 UN | 27.40 [1.08] | 31.80 [1.25] | 51.60 [2.03] |
| 40 | — | 40 | 24 | 2.500-16 UN | 29.00 [1.14] | 33.30 [1.31] | 54.60 [2.15] |
| 44 | — | 44 | 24 | 2.750-16 UN | 30.20 [1.19] | 34.50 [1.36] | 57.90 [2.28] |
| 48 | — | 48 | 24 | 3.000-16 UN | 31.50 [1.24] | 35.10 [1.38] | 61.00 [2.40] |
| 61 | 61 | — | 18 | 1.500-18 UNEF | 23.90 [0.94] | 27.90 [1.10] | 41.10 [1.62] |

*For larger than maximum type 1 entry sizes, a two-piece adapter will be supplied. Contact TE for information.

### Entry Size Dimensions

| Entry Size | Dimensions Z +0.25–0.5 | Dimensions S Diameter (Min.–Max.) | Dimensions Y ±0.38 | Dimensions W Max. |
|---|---|---|---|---|
| 04 | 6.35 [0.25] | 9.39—9.56 [0.37—0.38] | 13.97 [0.55] | 28.4 [1.12] |
| 05 | 7.92 [0.31] | 10.97—11.13 [0.43—0.44] | 15.54 [0.61] | 30.2 [1.19] |
| 06 | 9.52 [0.37] | 12.57—12.73 [0.49—0.50] | 17.14 [0.67] | 31.8 [1.25] |
| 07 | 11.09 [0.44] | 14.12—14.31 [0.55—0.56] | 18.71 [0.74] | 33.3 [1.31] |
| 08 | 12.70 [0.50] | 15.72—15.91 [0.62—0.63] | 20.32 [0.80] | 35.1 [1.38] |
| 10 | 15.87 [0.62] | 18.84—19.11 [0.74—0.75] | 23.49 [0.92] | 38.1 [1.50] |
| 12 | 19.05 [0.75] | 22.02—22.28 [0.87—0.88] | 26.67 [1.05] | 41.1 [1.62] |
| 14 | 22.23 [0.88] | 25.17—25.46 [0.99—1.00] | 29.84 [1.17] | 44.5 [1.75] |
| 16 | 25.40 [1.00] | 28.34—28.63 [1.12—1.13] | 33.02 [1.30] | 47.8 [1.88] |
| 18 | 28.57 [1.12] | 31.52—31.81 [1.24—1.25] | 36.19 [1.42] | 50.8 [2.00] |
| 20 | 31.75 [1.25] | 34.69-34.98 [1.37-1.38] | 39.37 [1.55] | 53.8 [2.12] |
| 22 | 34.93 [1.38] | 37.79-38.15 [1.49-1.50] | 42.55 [1.68] | 57.2 [2.25] |
| 24 | 38.10 [1.50] | 40.97-41.33 [1.61-1.63] | 45.72 [1.80] | 60.5 [2.38] |

### Molded Part Selection Guide (Tinel)

| Tinel-Lock Entry Size | Standard K Parts Straight Part No. | Standard K Parts 90° Part No. | Standard K Parts Cable OD (Min.) | Low-Profile D Parts Straight Part No. | Low-Profile D Parts 90° Part No. | Low-Profile D Parts Cable OD (Min.) |
|---|---|---|---|---|---|---|
| 04 | 202K232 | — | 3.3 [0.1] | — | — | — |
| 04 | 202W232 | — | 4.3 [0.2] | — | — | — |
| 04 | 202K121 | 222K121 | 5.6 [0.2] | 202D211 | 222D211 | 6.4 [0.3] |
| 05, 06 | 202K132 | 222K132 | 5.9 [0.2] | 202D221 | 222D221 | 7.4 [0.3] |
| 07, 08 | 202K142 | 222K142 | 7.1 [0.3] | 202D232 | 222D232 | 8.4 [0.3] |
| 10, 12 | 202K153 | 222K152 | 8.4 [0.3] | 202D242 | 222D242 | 9.7 [0.4] |
| 14, 16 | 202K163 | 222K163 | 9.9 [0.4] | 202D253 | 222D253 | 10.5 [0.4] |
| 18, 20, 22 | 202K174 | 222K174 | 15.7 [0.6] | 202D263 | 222D263 | 12.2 [0.5] |
| 24 | 202K185 | 222K185 | 16.8 [0.7] | — | — | — |

### Uniboot Parts

| Tinel-Lock Entry Size | Part No. | Cable OD (Min.) |
|---|---|---|
| 04 | 202C611 | 4.8 [0.19] |
| 05, 06, 07 | 202C621 | 8.1 [0.32] |
| 08, 10, 12 | 202C632 | 12.7 [0.50] |
| 12, 14, 16 | 202C642 | 17.5 [0.69] |
| 16, 18, 20, 22 | 202C653 | 22.4 [0.88] |
| 24 | 202C663 | 22.9 [0.90] |





Catalog 1654025
Revised 3-13

www.te.com

Dimensions are shown for reference purposes only. Specifications subject to change.

Dimensions are in millimeters unless otherwise specified.

USA: +1 800 522 6752
Asia Pacific: +86 0 400 820 6015
UK: +44 800 267 666

For additional support numbers please visit www.te.com

## Code 54 MIL-C-5015 (MS3400), MIL-C-26482 Series 2, MIL-C-83723 Series I and III, MIL-C-81703 Series III (Continued)

### CRES-Lock Adapters (USA)
### BND Adapters (Europe)

### Code 54 Band Strap Adapter

**Notes:**
1. This product is designed to terminate a braided cable shield by means of a band strap and a heat shrinkable lipped boot to a connector.
2. See CH00-0250-016 for ordering information, modifications and additional dimensions.
3. See drawing BND-XX25S for band strap dimensions and information.
4. Adapter to be permanently marked with code identification number and full part number (e.g. 06090-BND54AB00-1812). Band strap shall bear no part marking.
5. All entry sizes are shown in Table II. Maximum entry sizes are as shown in Table I. For larger entry sizes than the maximum, a Type II adapter may be supplied. See CH00-0250-016 for further details.

**For additional codes available, contact TE.**

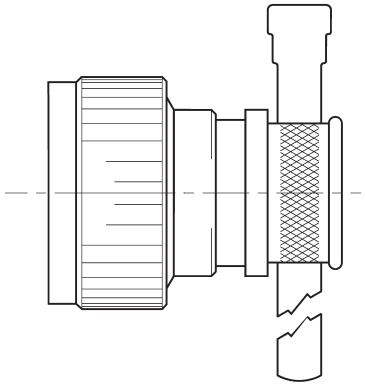

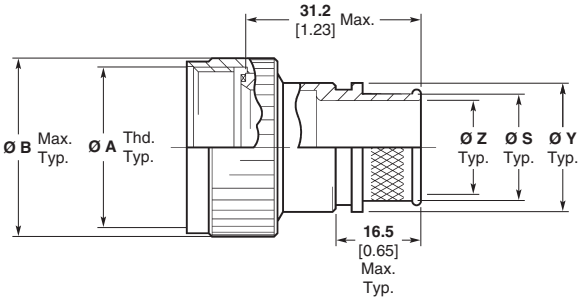


**Straight Adapter**
**Code 00**

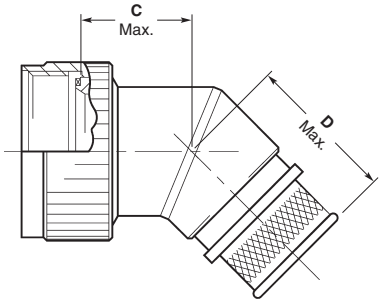


**45° Adapter**
**Code 45**

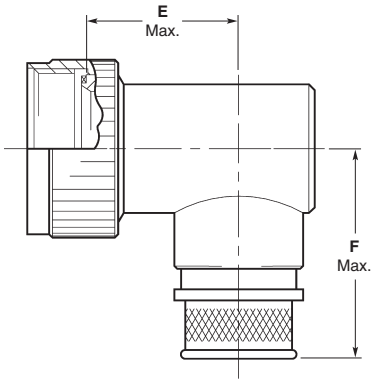


**90° Adapter**
**Code 90**

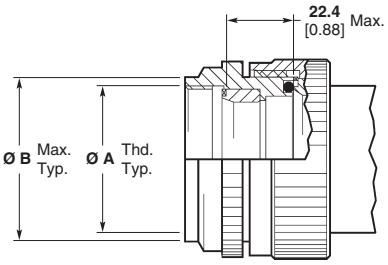


**Type II Modification**
**(See Note 5)**

| Available in: | Americas | Europe | Asia Pacific |
|---|---|---|---|
| | ■ | ■ | ■ |



Catalog 1654025
Revised 3-13

www.te.com

Dimensions are shown for reference purposes only. Specifications subject to change.

Dimensions are in millimeters unless otherwise specified.

USA: +1 800 522 6752
Asia Pacific: +86 0 400 820 6015
UK: +44 800 267 666

For additional support numbers please visit www.te.com

## Code 54 MIL-C-5015 (MS3400), MIL-C-26482 Series 2, MIL-C-83723 Series I and III, MIL-C-81703 Series III (Continued)

**CRES-Lock Adapters (USA)**
**BND Adapters (Europe)**
(continued)

**Code 54 Band Strap Adapter** (Continued)

### Table I

| Order Number | Shell Size Series[2] | Shell Size Series[3] | Entry Size Max. Type I[1] | Ø A Unified Thread Class 2B | Ø B Max. | Ø B Max.[4] | C Max. | D Max. | F Max. |
|---|---|---|---|---|---|---|---|---|---|
| 08 | — | 08 | 04 | 0.5000–20 UNF | **15.7** 0.67 | **22.6** 0.89 | **19.0** 0.75 | **26.2** 1.03 | **31.0** 1.22 |
| 10 | — | 10 | 06 | 0.6250–24 UNEF | **18.5** 0.73 | **25.7** 1.01 | **19.6** 0.77 | **26.7** 1.05 | **32.5** 1.28 |
| 12 | 7 | 12 | 08 | 0.7500–20 UNEF | **21.8** 0.86 | **29.0** 1.14 | **20.3** 0.80 | **27.2** 1.07 | **34.3** 1.35 |
| 14 | 12 | 14 | 09 | 0.8750–20 UNEF | **24.9** 0.98 | **32.0** 1.26 | **20.9** 0.82 | **27.7** 1.09 | **35.6** 1.40 |
| 16 | 19 | 16 | 11 | 0.9375–20 UNEF | **28.2** 1.11 | **35.3** 1.39 | **21.3** 0.84 | **28.4** 1.12 | **37.1** 1.46 |
| 18 | 27 | 18 | 12 | 1.0000–20 UNEF | **31.0** 1.22 | **38.4** 1.51 | **21.8** 0.86 | **28.7** 1.13 | **38.9** 1.53 |
| 20 | 37 | 20 | 14 | 1.1875–18 UNEF | **34.3** 1.35 | **41.7** 1.64 | **22.4** 0.88 | **29.5** 1.16 | **40.4** 1.59 |
| 22 | — | 22 | 16 | 1.3125–18 UNEF | **37.3** 1.47 | **44.7** 1.76 | **23.1** 0.91 | **30.0** 1.18 | **41.9** 1.65 |
| 24 | — | 24 | 18 | 1.4375–18 UNEF | **40.5** 1.59 | **48.0** 1.89 | **23.6** 0.93 | **30.7** 1.21 | **43.4** 1.71 |
| 28 | — | 28 | 22 | 1.7500–18 UNS | **50.0** 1.97 | **54.4** 2.14 | **24.9** 0.98 | **31.8** 1.25 | **48.3** 1.90 |
| 32 | — | 32 | 26 | 2.0000–18 UNS | **56.4** 2.22 | **61.0** 2.40 | **26.2** 1.03 | **33.3** 1.31 | **51.6** 2.03 |
| 36 | — | 36 | 28 | 2.2500–16 UN | **62.7** 2.47 | **67.1** 2.64 | **27.4** 1.08 | **34.3** 1.35 | **54.6** 2.15 |
| 40 | — | 40 | 32 | 2.5000–16 UN | **69.1** 2.72 | **73.4** 2.89 | **28.4** 1.12 | **35.6** 1.40 | **57.7** 2.27 |
| 44 | — | 44 | 34 | 2.75000–16 UN | **75.4** 2.97 | **79.8** 3.14 | **29.7** 1.17 | **36.8** 1.45 | **61.0** 2.40 |
| 48 | — | 48 | 34 | 3.0000–16 UN | **81.8** 3.22 | **86.1** 3.39 | **31.0** 1.22 | **38.1** 1.50 | **64.0** 2.52 |
| 61 | 61 | — | 18 | 1.5000–18 UNEF | **41.9** 1.65 | **47.8** 1.88 | **23.9** 0.94 | **30.7** 1.21 | **44.2** 1.74 |

1. All entry sizes are shown in Table II. Maximum entry sizes are as shown in Table I. For larger entry sizes than the maximum, a Type II adapter may be supplied. See CH00-0250-016 for further details.
2. Adapter mates to: MIL-C-81703 Series III, MS3424, MS3446, MS3464, MS3467, MS3468, Class E and L Connectors.
3. Adapter mates to MIL-C-5015G, MS3400 Series, Class D, E, K, L, U and W: MS3400, MS3401, MS3404, MS3406, MS3450, MS3451, MS3454, MS3456, MS3470, MS3471, MS3472, MS3474, MS3475, MS3476, MIL-C-83723 Series II, Class A and L. MIL-C-83723, /14, /36, /37, /38, /39, /40, /41, /42, /43, /48, /49, /65, /66, /67, /68, /69, /70, /71, /72, /73, /74, /75, /76, /77, /78, /82, /83, /84, /85, /86, /87, /91, /92, /95, /97, and /98 Connectors, MS3155 controlled interfaces.
4. These dimensions apply if a self-locking coupling nut is used, modification code "S".

### Table II

| Entry Size | Ø Z +0.25/-0.50 [+0.010/-0.020] | Ø S ±0.51 [±0.020] | Ø Y ±0.38 [±0.015] | E Max. |
|---|---|---|---|---|
| 03 | **4.75** 0.188 | **7.92** 0.312 | **11.10** 0.438 | **16.3** 0.64 |
| 04 | **6.35** 0.250 | **9.52** 0.375 | **12.70** 0.500 | **16.3** 0.64 |
| 05 | **7.92** 0.312 | **11.12** 0.438 | **14.30** 0.563 | **17.3** 0.68 |
| 06 | **9.52** 0.375 | **12.70** 0.500 | **15.88** 0.625 | **17.8** 0.70 |
| 07 | **11.12** 0.438 | **14.30** 0.562 | **17.50** 0.689 | **18.8** 0.74 |
| 08 | **12.70** 0.500 | **15.88** 0.625 | **19.05** 0.750 | **19.8** 0.78 |
| 09 | **14.30** 0.562 | **17.50** 0.688 | **20.65** 0.813 | **20.3** 0.80 |
| 10 | **15.88** 0.625 | **19.05** 0.750 | **22.23** 0.875 | **20.8** 0.82 |
| 11 | **17.50** 0.688 | **20.65** 0.812 | **23.80** 0.938 | **21.8** 0.86 |
| 12 | **19.05** 0.750 | **22.23** 0.875 | **25.40** 1.000 | **22.9** 0.90 |
| 13 | **20.65** 0.812 | **23.83** 0.938 | **27.00** 1.063 | **23.9** 0.94 |
| 14 | **22.23** 0.875 | **25.40** 1.000 | **30.16** 1.189 | **24.4** 0.96 |

### Table II (Continued)

| Entry Size | Ø Z +0.25/-0.50 [+0.010/-0.020] | Ø S ±0.51 [±0.020] | Ø Y ±0.38 [±0.015] | E Max. |
|---|---|---|---|---|
| 15 | **23.83** 0.938 | **27.00** 1.062 | **31.75** 1.250 | **24.9** 0.98 |
| 16 | **25.40** 1.000 | **28.58** 1.125 | **33.34** 1.313 | **25.9** 1.02 |
| 18 | **28.58** 1.125 | **31.75** 1.250 | **36.51** 1.438 | **28.3** 1.11 |
| 20 | **31.75** 1.250 | **34.90** 1.375 | **39.69** 1.563 | **29.8** 1.17 |
| 22 | **34.90** 1.375 | **38.10** 1.500 | **42.86** 1.688 | **31.3** 1.23 |
| 24 | **38.10** 1.500 | **41.28** 1.625 | **46.83** 1.844 | **33.8** 1.33 |
| 26 | **41.28** 1.625 | **44.45** 1.750 | **49.61** 1.953 | **35.1** 1.38 |
| 28 | **44.45** 1.750 | **47.63** 1.875 | **52.78** 2.078 | **36.3** 1.43 |
| 30 | **47.65** 1.875 | **50.80** 2.000 | **56.36** 2.219 | **37.8** 1.49 |
| 32 | **50.80** 2.000 | **54.00** 2.125 | **59.53** 2.344 | **39.6** 1.56 |
| 34 | **54.00** 2.125 | **57.15** 2.250 | **62.71** 2.469 | **41.1** 1.62 |





Catalog 1654025
Revised 3-13

www.te.com

Dimensions are shown for reference purposes only. Specifications subject to change.

Dimensions are in millimeters unless otherwise specified.

USA: +1 800 522 6752
Asia Pacific: +86 0 400 820 6015
UK: +44 800 267 666

For additional support numbers please visit www.te.com

## Code 76 BS 9522 F0017 (Pattern 105)

### Spin-Coupling Adapters

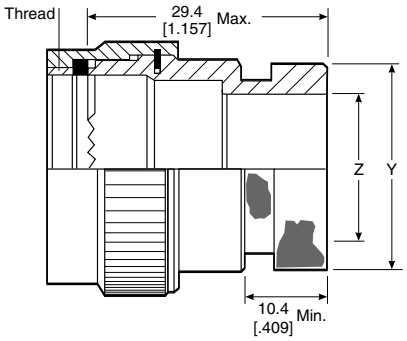


### Table of Dimensions

| Order No. | Shell Size | Thread | Dimensions | |
|---|---|---|---|---|
| | | | Y Max. | Z Min. |
| 08 | 8 | .438-28 UNEF | 13.54 [0.53] | 6.9 [0.27] |
| 10 | 10 | .562-24 UNEF | 15.37 [0.61] | 9.9 [0.39] |
| 12 | 12 | .688-24 UNEF | 19.66 [0.77] | 13.4 [0.53] |
| 14 | 14 | .812-20 UNEF | 21.29 [0.84] | 15.9 [0.63] |
| 16 | 16 | .938-20 UNEF | 24.47 [0.96] | 18.9 [0.74] |
| 18 | 18 | 1.062-18 UNEF | 26.47 [1.04] | 21.4 [0.84] |
| 20 | 20 | 1.188-18 UNEF | 30.92 [1.22] | 23.9 [0.94] |
| 22 | 22 | 1.312-18 UNEF | 34.42 [1.36] | 27.4 [1.08] |
| 24 | 24 | 1.438-18 UNEF | 36.40 [1.44] | 29.9 [1.18] |

### Molded Part Selection Guide (Spin-Coupling)

| Order No. | Standard K Parts | | | Low-Profile D Parts | | |
|---|---|---|---|---|---|---|
| | Straight Part No. | 90° Part No. | Cable OD (Min.) | Straight Part No. | 90° Part No. | Cable OD (Min.) |
| 03, 08 | 202W232 | — | 4.3 [0.19] | — | — | — |
| 03, 08 | 202K121 | 222K121 | 5.6 [0.22] | 202D211 | 222D211 | 6.4 [0.25] |
| 10, 11 | 202K132 | 222K132 | 5.9 [0.23] | 202D221 | 222D221 | 7.4 [0.29] |
| 12, 14 | 202K142 | 222K142 | 7.1 [0.28] | 202D232 | 222D232 | 8.4 [0.33] |
| 16, 18 | 202K153 | 222K152 | 8.4 [0.33] | 202D242 | 222D242 | 9.7 [0.38] |
| 20, 22 | 202K163 | 222K163 | 9.9 [0.39] | 202D253 | 222D253 | 10.5 [0.41] |
| 24, 28, | 202K174 | 222K174 | 15.7 [0.62] | 202D263 | 222D263 | 12.2 [0.48] |
| 32, 36 | 202K185 | 222K185 | 16.8 [0.66] | 202D274 | 222D274 | 14.3 [0.56] |

### Uniboot Parts

| Order No. | Part No. | Cable OD (Min.) |
|---|---|---|
| 03, 08 | 202C611 | 4.8 [0.19] |
| 10, 11, 12 | 202C621 | 8.1 [0.32] |
| 14, 16 | 202C632 | 12.7 [0.50] |
| 18, 20 | 202C642 | 17.5 [0.69] |
| 22, 24 | 202C653 | 22.4 [0.88] |

| Available in: | Americas | Europe | Asia Pacific |
|---|---|---|---|
| | ■ | ■ | ■ |



Catalog 1654025
Revised 3-13

www.te.com

Dimensions are shown for reference purposes only. Specifications subject to change.

Dimensions are in millimeters unless otherwise specified.

USA: +1 800 522 6752
Asia Pacific: +86 0 400 820 6015
UK: +44 800 267 666

For additional support numbers please visit www.te.com

## Code 76 BS 9522 F0017 (Pattern 105) (Continued)

### Tinel-Lock Adapters

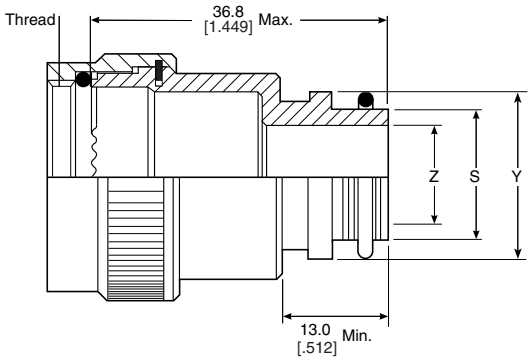


TXR76XX00-XXXXXX

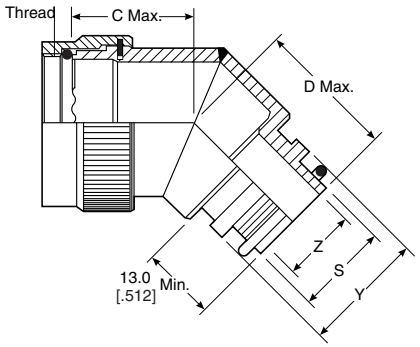


TXR76XX45-XXXXXX

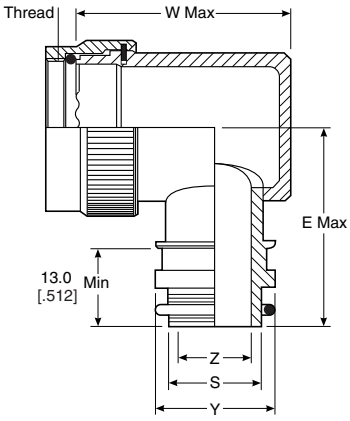


TXR76XX90-XXXXXX

### Table of Dimensions

| Order No. | Shell Size | Max. Entry Size Type 1* | Thread | Dimensions | | |
|---|---|---|---|---|---|---|
| | | | | C Max. | D Max. | E Max. |
| 08 | 8 | 04 | .438-28 UNEF | 18.0 [.74] | 21.3 [.87] | 26.7 [1.05] |
| 10 | 10 | 07 | .562-24 UNEF | 18.8 [.76] | 22.1 [.90] | 28.2 [1.11] |
| 12 | 12 | 08 | .688-24 UNEF | 19.3 [.79] | 22.9 [.92] | 30.2 [1.19] |
| 14 | 14 | 10 | .812-20 UNEF | 20.1 [.82] | 23.4 [.95] | 31.8 [1.25] |
| 16 | 16 | 12 | .938-20 UNEF | 20.8 [.84] | 24.1 [.97] | 33.5 [1.32] |
| 18 | 18 | 12 | 1.062-18 UNEF | 21.3 [.87] | 24.6 [1.00] | 35.1 [1.38] |
| 20 | 20 | 16 | 1.188-18 UNEF | 22.1 [.89] | 25.4 [1.02] | 36.6 [1.44] |
| 22 | 22 | 18 | 1.312-18 UNEF | 22.6 [.92] | 25.9 [1.05] | 38.1 [1.50] |
| 24 | 24 | 20 | 1.438-18 UNEF | 23.4 [.97] | 26.7 [1.07] | 39.4 [1.55] |

*For larger than maximum type 1 entry sizes, a two-piece adapter will be supplied. Contact TE for information.

| Available in: | Americas | Europe | Asia Pacific |
|---|---|---|---|
| | ■ | ■ | ■ |







Dimensions are shown for reference purposes only. Specifications subject to change.

Dimensions are in millimeters unless otherwise specified.

USA: +1 800 522 6752
Asia Pacific: +86 0 400 820 6015
UK: +44 800 267 666

For additional support numbers please visit www.te.com

## Code 76 BS 9522 F0017 (Pattern 105) (Continued)

### Tinel-Lock Adapters
(continued)

### Entry Size Dimensions

| Entry Size | Dimensions | | | |
|---|---|---|---|---|
| | Z +0.25–0.5 | S Diameter (Min.–Max.) | Y ±0.38 | W Max. |
| 04 | 6.35 [0.25] | 9.39—9.56 [0.37—0.38] | 13.97 [1.22] | 31.0 [0.55] |
| 05 | 7.92 [0.31] | 10.97—11.13 [0.43—0.44] | 15.54 [1.29] | 32.8 [0.61] |
| 06 | 9.52 [0.37] | 12.57—12.73 [0.49—0.50] | 17.14 [1.35] | 34.3 [0.67] |
| 07 | 11.09 [0.44] | 14.12—14.31 [0.55—0.56] | 18.71 [1.41] | 35.8 [0.74] |
| 08 | 12.7 [0.50] | 15.72—15.91 [0.62—0.63] | 20.32 [1.47] | 37.3 [0.80] |
| 10 | 15.87 [0.62] | 18.84—19.11 [0.74—0.75] | 23.49 [1.60] | 40.6 [0.92] |
| 12 | 19.05 [0.75] | 22.02—22.28 [0.87—0.88] | 26.67 [1.72] | 43.7 [1.05] |
| 14 | 22.23 [0.88] | 25.17—25.46 [0.99—1.00] | 29.84 [1.85] | 47.0 [1.17] |
| 16 | 25.4 [1.00] | 28.34—28.63 [1.12—1.13] | 33.02 [1.97] | 50.0 [1.30] |
| 18 | 28.57 [1.12] | 31.52—31.81 [1.24—1.25] | 36.19 [2.10] | 53.3 [1.42] |
| 20 | 31.75 [1.25] | 34.69—34.98 [1.37—1.38] | 39.37 [1.55] | 53.8 [2.19] |

### Molded Part Selection Guide (Tinel)

| Tinel-Lock Entry Size | Standard K Parts | | | Low-Profile D Parts | | |
|---|---|---|---|---|---|---|
| | Straight Part No. | 90° Part No. | Cable OD (Min.) | Straight Part No. | 90° Part No. | Cable OD (Min.) |
| 04 | 202K232 | — | 3.3 [0.1] | — | — | — |
| 04 | 202W232 | — | 4.3 [0.2] | — | — | — |
| 04 | 202K121 | 222K121 | 5.6 [0.2] | 202D211 | 222D211 | 6.4 [0.3] |
| 05, 06 | 202K132 | 222K132 | 5.9 [0.2] | 202D221 | 222D221 | 7.4 [0.3] |
| 07, 08 | 202K142 | 222K142 | 7.1 [0.3] | 202D232 | 222D232 | 8.4 [0.3] |
| 10, 12 | 202K153 | 222K152 | 8.4 [0.3] | 202D242 | 222D242 | 9.7 [0.4] |
| 14, 16 | 202K163 | 222K163 | 9.9 [0.4] | 202D253 | 222D253 | 10.5 [0.4] |
| 18, 20, 22 | 202K174 | 222K174 | 15.7 [0.6] | 202D263 | 222D263 | 12.2 [0.5] |
| 24 | 202K185 | 222K185 | 16.8 [0.7] | — | — | — |

### Uniboot Parts

| Tinel-Lock Entry Size | Part No. | Cable OD (Min.) |
|---|---|---|
| 04 | 202C611 | 4.8 [0.19] |
| 05, 06, 07 | 202C621 | 8.1 [0.32] |
| 08, 10, 12 | 202C632 | 12.7 [0.50] |
| 12, 14, 16 | 202C642 | 17.5 [0.69] |
| 16, 18, 20, 22 | 202C653 | 22.4 [0.88] |
| 24 | 202C663 | 22.9 [0.90] |



Dimensions are shown for reference purposes only. Specifications subject to change.

Dimensions are in millimeters unless otherwise specified.

USA: +1 800 522 6752
Asia Pacific: +86 0 400 820 6015
UK: +44 800 267 666

For additional support numbers please visit www.te.com

## Raychem FlexiScreen Backshells

### FlexiScreen Backshells

The FlexiScreen high performance backshells are designed to provide EMC protection for both commercial and military applications. FlexiScreen backshells represent a significant improvement over pig-tail termination methods by providing 360˚ EMC shielding on the termination area of each individual cable. FlexiScreen backshell terminations can be installed to allow the cable bundle to be installed at various angles, such as 30 & 45˚, using a single backshell design.

FlexiScreen backshells can be installed to allow the cable bundle to be formed at various angles, such as 90˚ and 45˚, using a single backshell design.

FlexiScreen backshells are a cost effective solution while maintaining low weight.

### Product Facts

- **Cost effective solution**
- **Capitalizes on proven performance of HexaShield adapter components**
- **Flexible and variable bending configurations**
- **Light weight**
- **Repairable**
- **Out performs commonly used alternatives**

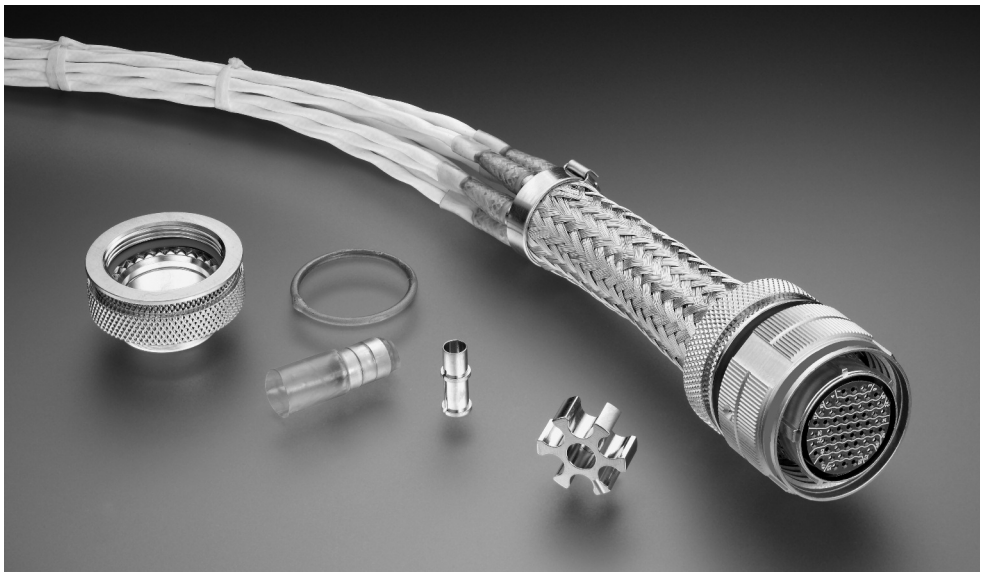

### Applications

Designed to be mounted on MIL-DTL-38999, 83723, 26482, 5015, or commonly used connectors

Aerospace, Defense, Ground Vehicles, Control Circuits — where excellent EMI and shielding performance is required

### Standards & Specs

Finish Types: SAE-AMS-PQ-P-416 cadmium olive drab, SAE-AMS-C-26074 Class 3, grade B Electroless Nickel (others available upon request)

TE Specification RB-117

RPIP-696-21 Installation Procedure for FlexiScreen backshells

### Kit Contents

1 backshell assembly

1 multi-position star

1 band strap

### Electrical

DC resistance:
<5.0 mΩ braid to backshell per SAE-AS85049
<10.0 mΩ braid to cable braids per RB-117

Shielding effectiveness:
Complies with ANSI/NEMA EC 61-2005

Lightning strike:
No damage or degradation of components. Tested per RTCA/DO-160F, Section 22

### Physical or Other Properties

Vibration:
Tested per EAI-364-28, test condition VI, Letter J

Mechanical shock:
Tested per EAI-364-27, test condition D

Cable pull-out:
Tested per MIL-STD-1344, method 2009-1, test condition A

Operating temperature:
-65˚ to +150˚





Catalog 1654025
Revised 3-13

www.te.com

Dimensions are shown for reference purposes only. Specifications subject to change.

Dimensions are in millimeters unless otherwise specified.

USA: +1 800 522 6752
Asia Pacific: +86 0 400 820 6015
UK: +44 800 267 666

For additional support numbers please visit www.te.com

## Raychem FlexiScreen Backshells (Continued)

### Part Numbering System

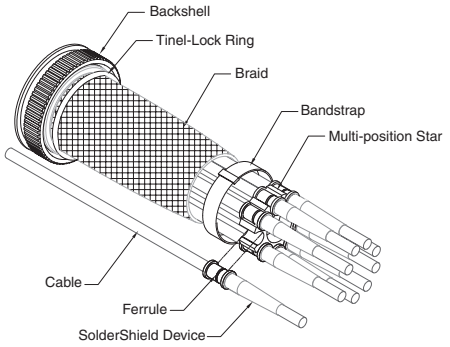


FLS40 - A B 10 A - A

- Star Configuration (number of ferrule positions)
  A = Standard star
  B = Star one size smaller
  C = Star one size larger
- Braid - (Braid supplied 3" (76mm) as standard length)
  A = Tin-plated copper, 36 awg, single braid
  B = Tin-plated copper, 36 awg, double braid
  C = Nickel plated copper, 36 awg, single braid
  D = Nickel plated copper, 36 awg, double braid
- Order Number
- Finish Type:
  B = Cadmium olive drab to SAE-AMS-PQ-P-416
  C = Electroless nickel to SAE-AMS-C-26074 Class 3, Grade B
- Material Code:
  A = Aluminum alloy
  K = Stainless steel
- Connector Code Number:
  FLS40 = MIL-DTL-38999 Series III and IV
  FLS41 = MIL-DTL-38999 Series I and II
  FLS 54 = MIL-DTL-5015H (now SAE-AS50151), MIL-DTL-26482 series 2, M83723 series 1 and III, MIL-DTL-81703 (now SAE-AS81703), and all connectors with MS3155 controlled accessory interface.

Also available for other connector codes. Please consult TE for further information.

### FLS40

| ORDER NO. | SHELL SIZE | ENTRY SIZE | ØZ +0.10 -.020 | ØA METRIC THREAD CLASS 6H | ØB MAX | STAR CONFIGURATION (NUMBER OF FERRULE POSITIONS) |
|---|---|---|---|---|---|---|
| 10 | 11 | 07 | 11.09 [0.437] | M15 X 1 | 21.25 [0.84] | A= 2<br>B= N/A<br>C= 3 |
| 12 | 13 | 08 | 12.70 [0.500] | M18 X 1 | 24.50 [0.97] | A= 3<br>B= 2<br>C= 5 |
| 14 | 15 | 10 | 15.87 [0.625] | M22 X 1 | 29.00 [1.15] | A= 5<br>B= 3<br>C= 6 |
| 16 | 17 | 12 | 19.05 [0.750] | M25 X 1 | 33.50 [1.32] | A= 6<br>B= 5<br>C= 7 |
| 18 | 19 | 14 | 22.23 [0.875] | M28 X 1 | 37.50 [1.48] | A= 7<br>B= 6<br>C= 9 |
| 20 | 21 | 16 | 25.40 [1.00] | M31 X 1 | 39.50 [1.56] | A= 9<br>B= 7<br>C= 10 |
| 22 | 23 | 18 | 28.57 [1.125] | M34 X 1 | 42.00 [1.66] | A= 10<br>B= 9<br>C= 13 |
| 24 | 25 | 20 | 34.93 [1.375] | M37 X 1 | 45.00 [1.78] | A= 12<br>B= 10<br>C= 17 |

### FLS41

| ORDER NO. | SHELL SIZE | | ENTRY SIZE | ØZ +0.10 -.020 | ØA THREAD RH CLASS 2B | ØB MAX | STAR CONFIGURATION (NUMBER OF FERRULE POSITIONS) |
|---|---|---|---|---|---|---|---|
| | SER 1 | SER 2 | | | | | |
| 10 | 11 | 10 | 06 | 9.52 [.375] | .562-24 UNEF | 22.2 [.875] | A= 2<br>B= N/A<br>C= 3 |
| 12 | 13 | 12 | 08 | 12.70 [.500] | .688-24 UNEF | 25.4 [1.00] | A= 3<br>B= 2<br>C= 5 |
| 14 | 15 | 14 | 10 | 15.87 [.625] | .812-20 UNEF | 30.2 [1.188] | A= 5<br>B= 3<br>C= 6 |
| 16 | 17 | 16 | 12 | 19.05 [.750] | .938-20 UNEF | 33.3 [1.312] | A= 6<br>B= 5<br>C= 7 |
| 18 | 19 | 18 | 12 | 19.05 [.750] | 1.062-18 UNEF | 36.5 [1.438] | A= 7<br>B= 6<br>C= 9 |
| 20 | 21 | 20 | 14 | 22.23 [.875] | 1.188-18 UNEF | 39.6 [1.562] | A= 9<br>B= 7<br>C= 10 |
| 22 | 23 | 22 | 16 | 25.40 [1.00] | 1.312-18 UNEF | 42.9 [1.688] | A= 10<br>B= 9<br>C= 13 |
| 24 | 25 | 24 | 18 | 28.57 [1.125] | 1.438-18 UNEF | 45.2 [1.781] | A= 12<br>B= 10<br>C= 17 |

### FLS54

| ORDER NO. | SHELL SIZE | ENTRY SIZE | ØZ +0.10 -.020 | ØA THREAD CLASS 6H | ØB MAX | STAR CONFIGURATION (NUMBER OF FERRULE POSITIONS) |
|---|---|---|---|---|---|---|
| 10 | 10, 10S & 10SL | 06 | 9.52 [.375] | .6250"-24 UNEF | 20.40 [0.80] | A= 2<br>B= N/A<br>C= 3 |
| 12 | 12 & 12S | 08 | 12.70 [.500] | .7500"-20 UNEF | 23.80 [0.93] | A= 3<br>B= 2<br>C= 5 |
| 14 | 14 & 14S | 08 | 12.70 [.500] | .8750"-20 UNEF | 27.00 [1.06] | A= 5<br>B= 3<br>C= 6 |
| 16 | 16 & 16S | 10 | 18.87 [.625] | 1.0000"-20 UNEF | 31.45 [1.23] | A= 6<br>B= 5<br>C= 7 |
| 18 | 18 | 12 | 19.05 [.750] | 1.0625"-18 UNEF | 33.25 [1.30] | A= 7<br>B= 6<br>C= 9 |
| 20 | 20 | 14 | 22.22 [.875] | 1.1875"-18 UNEF | 36.45 [1.43] | A= 9<br>B= 7<br>C= 10 |
| 22 | 22 | 16 | 25.40 [1.000] | 1.3125"-18 UNEF | 39.60 [1.55] | A= 10<br>B= 9<br>C= 13* |
| 24 | 24 | 18 | 28.58 [1.125] | 1.4375"-18 UNEF | 42.80 [1.68] | A= 12<br>B= 10<br>C= 17* |

* - STAR CONFIGURATION USES 3 PIECE STAR (1 STAR, 2 HALF STARS)

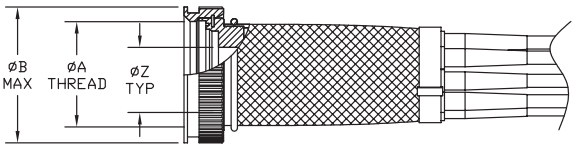






Dimensions are shown for reference purposes only. Specifications subject to change.

Dimensions are in millimeters unless otherwise specified.

USA: +1 800 522 6752
Asia Pacific: +86 0 400 820 6015
UK: +44 800 267 666

For additional support numbers please visit www.te.com

## Introduction

### Product Facts

- Superior EMC/EMI Shielding Performance
- Simple installation
- Easy reentry
- Simplified maintenance and repair
- Excellent mechanical and environmental resistance
- Efficient strain relief
- Flexibility
- Versatility

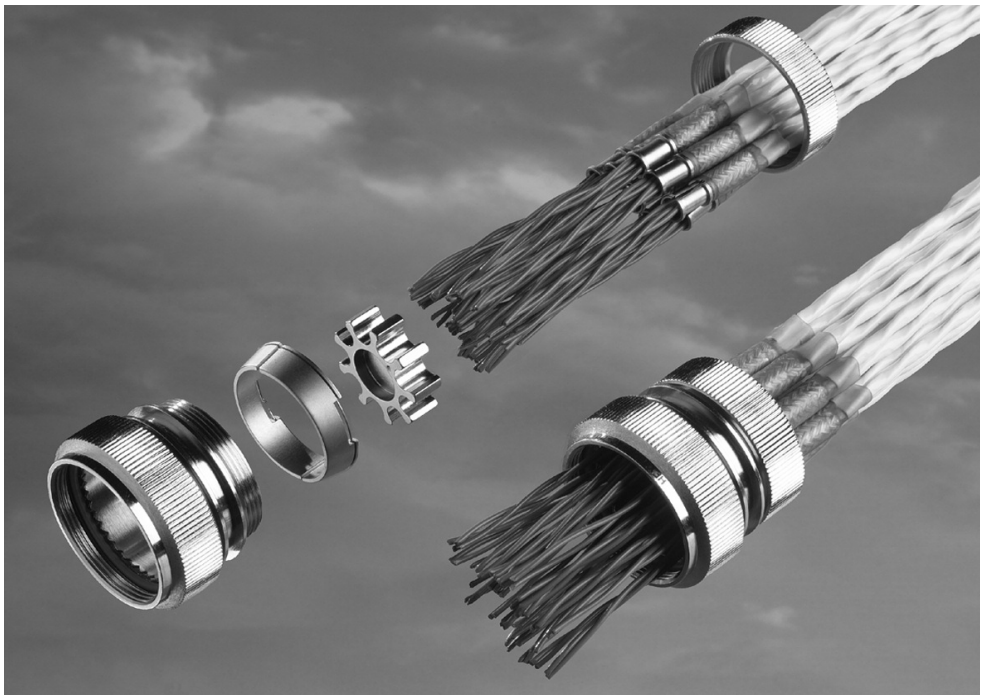

### Applications

TE, a longtime leader in harnessing technology, has written a new chapter in EMC shielding with the introduction of the Raychem brand HexaShield EMC adapter.

Designed to provide EMC protection solutions for both commercial and military applications, HexaShield adapters represent a significant improvement over pigtail termination methods. By providing 360-degree EMC shielding on the termination area of each individual cable, HexaShield adapters provide outstanding shielding effectiveness.

HexaShield adapters are simple to install, easy to maintain, and dependably resistant to mechanical and environmental stresses.

### Principal points and features

- Easy reentry: To insert or remove ferrules from the HexaShield adapter, simply loosen the back nut.
- Superior protection: No degradation of shielding performance.
- Up to four shielded cables accommodated by each ferrule.
- Mechanical and environmental protection equal to backshells complying with MIL-C-85049 Category 3B.
- Strain relief on each individual cable.
- Weight reduction, by possibly eliminating the need for overall shielding.
- Compact size - not exceeding outer diameter of connector.
- Available in straight, 45° and 90° angles, as well as swept and long bodies.

### Simple assembly and installation

1. Solder cable or wire shield to a ferrule with a heat-shrinkable SolderShield terminator.
2. Clip ferrule into one of the grounding star cavities.
3. Secure the back nut of the HexaShield adapter so that the conic ring assembly automatically compresses the ferrules.

| Available in: | |
|---|---|
| Americas | ■ |
| Europe | ■ |
| Asia Pacific | ■ |

### Designed to corresponding connector specifications

| Two Platings Available | TE Product Specifications |
|---|---|
| Electroless nickel (MIL-DTL-26074) | RB-110 and RB-114 |
| Olive drab cadmium (QQ-P-416 Type II Class 3) | — |

*Contact TE for additional platings.

### Installation Procedures

| | | |
|---|---|---|
| Installation procedure for HET-A-02X and HET-A-04X (RPIP-696-00) | Installation procedure for HET-03X (RPIP-696-03) | General procedure for cylindrical connectors, right-angle body (RPIP-696-07) |
| General procedure for ARINC 600 Size II connectors (RPIP-696-01) | General procedure for cylindrical connectors, straight body (RPIP-696-04) | — |
| General procedure for ARINC 600 Size III connectors (RPIP-696-02) | — | — |
| RPIP-696-13 HexaShield Filling Factors | | |





Catalog 1654025
Revised 3-13

www.te.com

Dimensions are shown for reference purposes only. Specifications subject to change.

Dimensions are in millimeters unless otherwise specified.

USA: +1 800 522 6752
Asia Pacific: +86 0 400 820 6015
UK: +44 800 267 666

For additional support numbers please visit www.te.com

## Kit Descriptions

### Hexashield Adapters for Circular Connectors: Straight, 45°and 90° Assemblies

| Item | Description |
|---|---|
| 1 | Straight adapter assembly |
| 2 | Conic ring assembly |
| 3 | Star<br>Plain (Standard)<br>Drilled (Option)<br>Split (Option) _ |
| 4 | Straight adapter assembly - “L” version<br>- nominally 0.5" [12.7] longer body |
| 5 | 45° adapter assembly - welded |
| 6 | 45° adapter assembly - swept |
| 7 | 90° adapter assembly - welded |
| 8 | 90° adapter assembly - swept<br>Standard products shown.<br>Variants available on request.<br><br>Split star assemblies are shown<br>on relevant customer drawings where applicable. |

| Item | HexaShield Version |
|---|---|
| -1 | Back Nut |
| -2 | Tinel adapter assembly<br>Tinel-Lock ring for single braid |
| -3 | Bandstrap adapter assembly |
| -C | Conduit adapter |

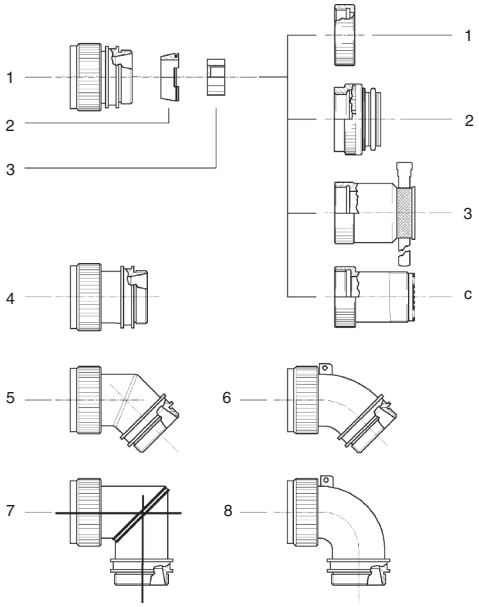


### HexaShield Adapters for ARINC 404/600 Connectors: Sizes 1, 2, 3 and 4 Assemblies

| Item | Description |
|---|---|
| 1 | Left side support |
| 2 | Right side support |
| 3 | Retention bars |
| 4 | Body assemblies<br>Body<br>Holding nut<br>Conic ring assembly<br>Star _<br>Back nut |
| 5 | Cavity plug assemblies<br>Plug<br>Holding nut |
| 6 | Pan head screws - 4-40 UNC |
| 7 | Spring washers |

ARINC 600 Size 2 shown
Stars are available as plain, drilled or split.
See relevant customer drawings for further information

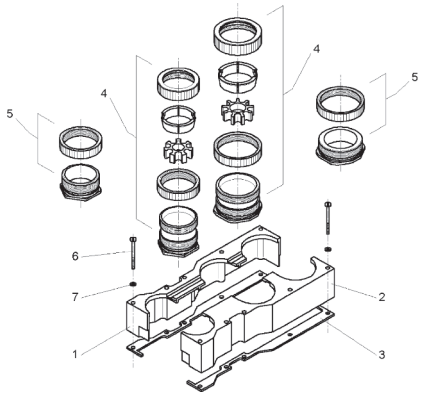




Catalog 1654025
Revised 3-13

www.te.com

Dimensions are shown for reference purposes only. Specifications subject to change.

Dimensions are in millimeters unless otherwise specified.

USA: +1 800 522 6752
Asia Pacific: +86 0 400 820 6015
UK: +44 800 267 666

For additional support numbers please visit www.te.com

## Ordering Information

### Part Numbering for Standard Products

### HexaShield Adapter for Circular Connectors

**HEXYY L -AY -00 S -YY -AY -Y -DS**

**Drilled Star:**
See applicable customer drawing for star options

**Type of Back Nut:**
1 = Standard back nut
2 = Clamping nut for tinel ring (for overbraid protection)
3 = Clamping nut with bandstrap
C = Clamping nut for conduit applicator

Max. number of ferrules that can be accommodated
See applicable customer drawing for options

**Hexashield Size Code:**
See applicable customer drawing for order number (shell

S = Swept version

**Configuration:**
00 = Straight body
45 = 45 degree angle body
90 = 90 degree angle body

**Type of Plating:**
B = Cadmium plated
C = Electroless nickel

L = Long body
See applicable customer drawing for availability

**Connector Code Number:**
21 = MIL-C-26482 Series 1
40 = MIL-DTL-38999 Series 3 and 4
41 = MIL-DTL-38999 Series 1 and 2
54 = MIL-DTL-83723 Series 1 and 3
MIL-C-25482 Series 2





Catalog 1654025
Revised 3-13

www.te.com

Dimensions are shown for reference purposes only. Specifications subject to change.

Dimensions are in millimeters unless otherwise specified.

USA: +1 800 522 6752
Asia Pacific: +86 0 400 820 6015
UK: +44 800 267 666

For additional support numbers please visit www.te.com

## Ordering Information (Continued)

### HexaShield Adapter for Collins Connectors

**HEXDB-AC-00-A9-1**

00 = Straight body
90 = Right-angle body

### HexaShield Adapter for ARINC 600 Connectors

**HEXA6-AY-00-YY-AY-Y**

**Clamping nut version:**
1 = Clamping nut alone
2 = Clamping nut for tinel ring

**Number of ferrules:**
18 for ARINC 600 size II (A and B cavities)
25 for ARINC 600 size II (A, B and C cavities)
18 for ARINC 600 size III (A and B cavities)
See applicable customer drawing for options

**ARINC Connector Size:**
02 = ARINC 600 size II
03 = ARINC 600 size III

**Configuration:**
00 = Straight body
90 = Right-angle body

**Plating:**
B = Cadmium plated
C = Electroless nickel

Drilled Stars are standard on ARINC 600 adapters.

### Part Numbering of Ferrule Kits*

**HET-A-02X** for small-size cable with SolderShield terminator
**HET-A-03X** for connection of unshielded cables
ferrules with heat-shrinkable tubing (no shield)
**HET-A-04X** for large-size cables with SolderShield terminator

**Type of Plating:**
B = Cadmium plated
C = Electroless nickel

**HEX07-AX** ferrule - solid blank for use when a HET-A is not needed

**Type of Plating:**
B = Cadmium plated
C = Electroless nickel

*Not all part numbers are standard; your local TE representative will assist you in selecting the appropriate standard product



Catalog 1654025
Revised 3-13

www.te.com

Dimensions are shown for reference purposes only. Specifications subject to change.

Dimensions are in millimeters unless otherwise specified.

USA: +1 800 522 6752
Asia Pacific: +86 0 400 820 6015
UK: +44 800 267 666

For additional support numbers please visit www.te.com

## EMC Performance

### Product Facts

- **Outperforms traditional pigtail termination, especially in HIRF performance**
- **Withstands 10-kA peak current lightning transients of SAE AE4L-87-3**

### Transfer Impedance

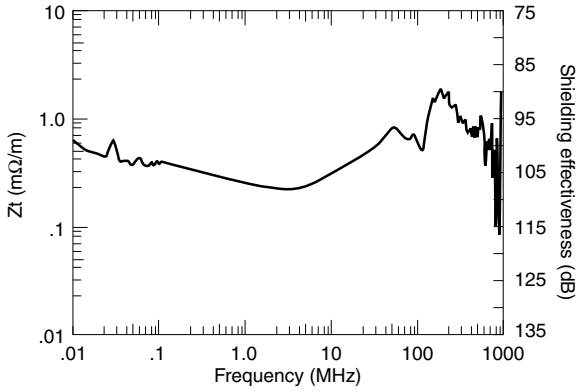


HexaShield size: 23

Cable: TE 5024H8424 (one cable installed)

Test method: CEI 96-1

### Protection Level

Generalized system performance (Actual system performance in any one test method may differ.)

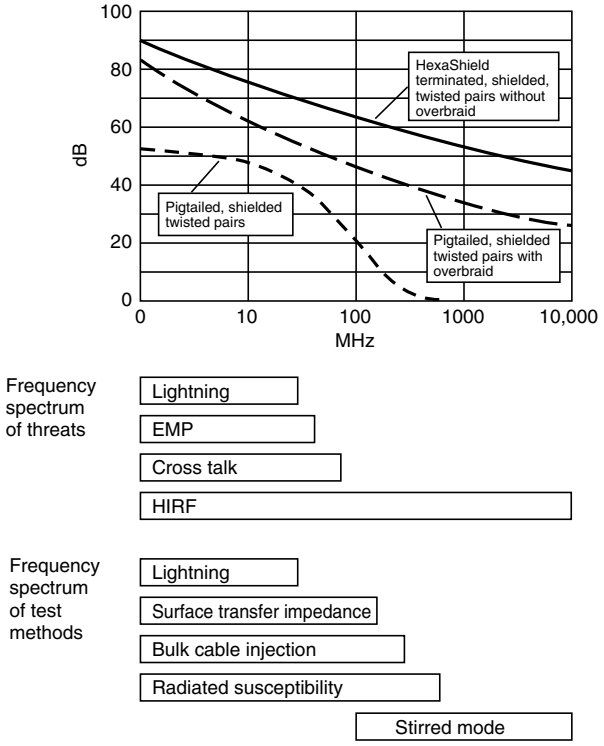






Catalog 1654025
Revised 3-13

www.te.com

Dimensions are shown for reference purposes only. Specifications subject to change.

Dimensions are in millimeters unless otherwise specified.

USA: +1 800 522 6752
Asia Pacific: +86 0 400 820 6015
UK: +44 800 267 666

For additional support numbers please visit www.te.com

## EMC Performance (Continued)

### Typical HexaShield Applications

| |
|---|
| Civilian and military aircraft |
| Avionics |
| Fighter aircraft |
| Missiles and launch support systems |
| Armored and military support vehicles |
| Navy ships (total shipboard hardening) |
| Military communications |
| Engines (FADEC harness hardening) |

### HexaShield Product Range

| |
|---|
| Accommodates the following connector types*: |
| MIL-C-26482 Series 1 |
| MIL-DTL-38999 Series 1, 2, 3, and 4 |
| MIL-C-26482 Series 2 |
| MIL-DTL-83723 Series 1 and 3 |
| DBAD |
| ARINC 600 |
| ARINC 404 |

*Please contact TE for other connector types and special requests.

## HexaShield F

### Flexible EMI Termination System

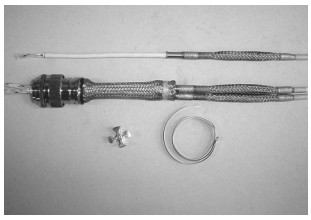

Individual cable braid terminations offering multiple connector pin repairs with zero pig-tail length for superior EMC performance, without the need for gross over-braid.

HexaShield F provides the following advantages:

- Installation ease reduces shield termination labor cost
- Ease of maintenance and repair allows performance of normal connector contact repairs, addition or change of a cable multiple times
- Small size and lightweight
- Sound mechanical performances of termination
- Provides strain relief on individual cables
- Better shielding performance of termination
- Available in various star sizes and platings (TE FLX40 series drawings. Contact TE for detailed information)

### Applications

HexaShield F termination system is especially useful for high-speed quadrax cable (IEEE 1394) applications.

### Product Facts

- **Maintains electrical integrity while connecting controlled electrical cables to mil-spec connectors**
- **Flexible and versatile design fits most mil-spec connectors, shielded signal wires, and ARINC connectors**
- **Zero pigtail length braid termination**
- **Modular cable termination using ferrules, SolderSleeve devices, stars, and braid allows for repeated cable segment repairability**
- **Stars for ferrules with band strap (Tinel-Lock ring can be available) allows for easy re-entry for repair and replacement while providing a secure attachment**
- **Various ferrule count and star positions with optional plugs available to accommodate various cables and plugs**



Dimensions are shown for reference purposes only. Specifications subject to change.

Dimensions are in millimeters unless otherwise specified.

USA: +1 800 522 6752
Asia Pacific: +86 0 400 820 6015
UK: +44 800 267 666

For additional support numbers please visit www.te.com

## Raychem Spin Lock Variable Angle Backshell

The Raychem spin lock variable angle backshell enables straight, 45˚ and 90˚ cable terminations with the same part. The connector backshell swivelling body rotates around the axis of the cable bundle and locks in position, minimizing stress on the wire bundle and providing more robust strain relief than other termination systems.

### Product Facts

- **Variable angle backshell enables straight, 45˚ and 90˚ cable terminations with the same part**
- **High performance, low resistance shield termination provided by the proven Tinel-Lock ring system or bandstrap**
- **Sealed termination achieved via a standard heat-shrinkable molded shape and adhesive system**
- **Available in a variety of material and plating options**
- **Saddle clamp strain relief or heat-shrinkable molded shape provides strain relief and sealing**

### Application Tooling

RH-3960-1 TINEL-KIT-120V or AD-5000-TINEL-ASSY (240v)

Torque Wrench

Heat Gun (if using heat-shrinkable molded part version)

### Applications

Military and Commercial Aerospace

Military Ground Systems

Military Marine

Commercial Ships and Off-Shore Marine

### Materials

Aluminum with Electroless Nickel or Cadmium over Electroless Nickel or Zinc Nickel plating

### Standards & Specs

Application Specification:

MIP-103-1 (Installation Procedure, Saddle Clamp Strain Relief)

MIP-103-2 (Installation Procedure, Molded Part Strain Relief)

Product Specification: MPS-103

Additional Documents: SLC40, SLC41, SLC54, SLM40, SLM41, SLM54, CH00-0250-019

### Electrical/Mechanical

| Title | Requirement | Passing Criteria |
|---|---|---|
| Examination of product | MPS-103 3.3.1 | Meet drawing dimension |
| DC Resistance | MPS-103 3.3.2 | DC Resistance < 2.5mΩ |
| Salt Spray | MPS-103 3.3.3 | Exposure of basis metal: Non-critical area <0.1" Critical area <.025" |
| Vibration (Category 3B) | MPS-103 3.3.4 | Must pass visual and DC Resistance criteria |
| Shock (Category 3B) | MPS-103 3.3.5 | Must pass visual and DC Resistance criteria |
| Cable Pullout | MPS-103 3.3.6 | Cable Slippage <0.125" |
| Braid Retention | MPS-103 3.3.7 | DC Resistance < 2.5 mΩ |
| Coupling Thread Strength | MPS-103 3.3.8 | No visible damage to threads, coupling nut or anti-rotational teeth |
| DC Resistance | MPS-103 3.3.2 | DC Resistance < 2.5mΩ |
| External Bending Moment | MPS-103 3.3.9 | No visible damage to adapter body, threads, coupling nut or anti-rotational teeth |
| Post Test Examination | MPS-103 3.3.10 | Meet drawing dimensions |

*MPS-103 Requirements meet or exceed SAE-AMS-85049





Catalog 1654025
Revised 3-13

www.te.com

Dimensions are shown for reference purposes only. Specifications subject to change.

Dimensions are in millimeters unless otherwise specified.

USA: +1 800 522 6752
Asia Pacific: +86 0 400 820 6015
UK: +44 800 267 666

For additional support numbers please visit www.te.com

## Raychem Spin Lock Variable Angle Backshell (Continued)

Straight

90°

45°

### Clamp Only

SLC AB – 16

- 16 – Order Number (See customer drawing)
- AB – Plating (See table below)
- SLC – Material (See table below)

### Saddle Clamp Version

SLC 40 AB – 1610 A

- A – Ring Designator (See table below)
- 1610 – Entry Size (See table below)
- 1610 – Order Number (See customer drawing)
- AB – Plating (See table below)
- AB – Material (See table below)
- 40 – Connector Code Number (see customer drawing - leave blank for clamp only)
- SLC – Strain Relief Method (See table below)

### Molded Boot Version

SLM 40 AB – 1610 A – 3/42 – O

- O – Color (Black)
- 42 – Adhesive (See 245WOXX)
- 3 – Molded Part Material (See 245WOXX)
- A – Ring Designator (See table below)
- 1610 – Entry Size (See table below)
- 1610 – Order Number (see customer drawing)
- AB – Plating (See table below)
- AB – Material (See table below)
- 40 – Connector Code Number (See customer drawing - leave blank for clamp only)
- SLM – Strain Relief Method (see table below)

### Body Only

SLX 40 AB – 1610

- 1610 – Entry Size (See table below)
- 1610 – Order Number (see customer drawing)
- AB – Plating (See table below)
- AB – Material (See table below)
- 40 – Connector Code Number (See customer drawing - leave blank for clamp only)
- SLX – Strain Relief Method (see table below)

### Additional Images:

| Notes: | | | |
|---|---|---|---|
| Strain Relief Method: | M | = | Molded Part |
| | C | = | Clamp Strain Relief |
| | X | = | Body Only |
| Material: | A | = | Aluminum Alloy |
| | S | = | Stainless Steel (contact TE) |
| Plating: | B | = | Cadmium olive drab to SAE-AMS-PQ-P-146 |
| | C | = | Electroless Nickle to SAE-AMS-26074 Class 3 or 4, Grade A |
| | Z | = | Zinc Nickel, Black to ASTM BB41 Grade 1, Type D |
| | J | = | Passivated per SAE-AMS-QQ-P-35 or MIL-S-5002 (contact TE) |
| Ring Designator: | A | = | AI |
| | B | = | BI |
| | C | = | C1 |
| | D | = | Band Strap (contact TE) |
| | Leave Blank for no band or Tinel-Lock Ring | | |



Dimensions are shown for reference purposes only. Specifications subject to change.

Dimensions are in millimeters unless otherwise specified.

USA: +1 800 522 6752
Asia Pacific: +86 0 400 820 6015
UK: +44 800 267 666

For additional support numbers please visit www.te.com

## Table of Contents

**Assemblies**
KTKK Product Family Overview . . . . . 7-2
KTKK Assemblies Screened . . . . . 7-3 to 7-5
**Feedthroughs**
TCFS/R Cable Feedthroughs . . . . . 7-6 to 7-8
**Preinstalled Adhesives**
S1030, S1048, S1275 (Rayaten) Preinstalled Adhesives . . . . . 7-9
**Kits**
SESK Shipboard Electrical Splice Kits . . . . . 7-10
Ship or Shore Breakout Kits . . . . . 7-11
Custom Maintenance and Repair Kits . . . . . 7-12 to 7-14
Marine High Voltage Termination & Splice Kits . . . . . 7-15, 7-16

TE Connectivity assemblies and kits fit a wide variety of applications.

KTKK assemblies are available with Rayaten screened molded parts, to suit a wide range of connectors. For correct part number referencing, please contact TE. Unscreened versions are available as well.

TCFS/R feedthroughs are also available, both with Rayaten screened molded parts or in unscreened versions.

TE KTKK and TCFS/R product families come with the added advantage of preinstalled adhesives, which can drastically reduce the installation time and cost of harness building.

SESK shipboard electrical splice kits can be used to splice multiconductor cables in new ship construction, allowing modular wiring techniques and use of existing wiring when jumbo-sizing commercial ships.

Ship-to-shore kits are used to bring shore power to a ship in dock.

**Note:** Users should independently evaluate the suitability of the product for their application. Before ordering, check with TE for most current data.





Catalog 1654025
Revised 3-13

www.te.com

Dimensions are shown for reference purposes only. Specifications subject to change.

Dimensions are in millimeters unless otherwise specified.

USA: +1 800 522 6752
Asia Pacific: +86 0 400 820 6015
UK: +44 800 267 666

For additional support numbers please visit www.te.com

## KTKK Product Family Overview

### Applications

KTKK cable assemblies are one-part assemblies for screened and unscreened cables. Constructed from heat-shrinkable screened molded parts and connector adapters, the assembly consists of parts already well proven in harsh military environments.

Installation is simply effected by coupling the adapter to the connector and shrinking the rear of the molded part onto the cable with a hot air gun.

The molded part has a hot-melt adhesive preinstalled to provide a bond between the cable jacket and the molded part.

When used in conjunction with shielded (screened) cables, the assembly provides electrical continuity between the cable shield and the connector with Rayaten molded parts.

Rayaten molded parts are shielded, heat-shrinkable parts providing shielding levels better than 80 dB at 100 MHz.

### Assembly Types

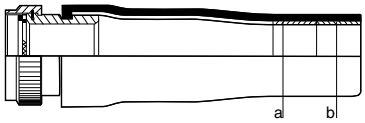


**Straight Assemblies**

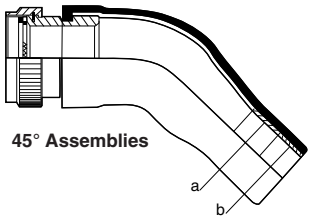


**45° Assemblies**

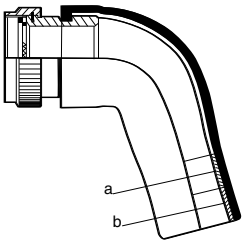


**90° Assemblies**

a = Preinstalled conductive adhesive for use with Rayaten screened molded parts only.

b = Preinstalled environment adhesive for use with screened and unscreened KTKK assemblies (see “Preinstalled adhesives,” page 7-9).

### Materials Available

| Material | | Specification |
|---|---|---|
| -25 fluid-resistant modified elastomer | -25S fluid-resistant modified elastomer; shielded | RW-2077 |
| -100 low-fire-hazard material | -100S low-fire-hazard; shielded | RW-2078 |

### Precoated Adhesives

| Material | Available Coatings (Unshielded) | Available Coatings (Shielded) |
|---|---|---|
| -25 | S1048 (/86) high-temperature hot-melt adhesive | — |
| -25S | — | S1030 (/180) low-fire-hazard hot-melt adhesive |
| -100 | S1030 (/180) low-fire-hazard hot-melt adhesive | — |
| -100S | — | S1275 conductive adhesive for use with Rayaten molded parts. |

| Available in: | Americas | Europe | Asia Pacific |
|---|---|---|---|
| | ■ | ■ | ■ |



Dimensions are shown for reference purposes only. Specifications subject to change.

Dimensions are in millimeters unless otherwise specified.

USA: +1 800 522 6752
Asia Pacific: +86 0 400 820 6015
UK: +44 800 267 666

For additional support numbers please visit www.te.com

## KTKK Assemblies Screened

### Pattern 105 Connectors or Connector Code 76

#### 25S Fluid Resistant Elastomer

| Connector Shell Size | Straight Assemblies | | 90° Assemblies | |
|---|---|---|---|---|
| | Part Number | Cable O.D. Range | Part Number | Cable O.D. Range |
| 08 | KTKK 0520 | 5.0-8.0 [.197-.315] | — | — |
| 10 | KTKK 0521 | 6.0-13.0 [.236-.512] | KTKK 1051 | 6.0-13.0 [.236-.512] |
| 12 | KTKK 0522 | 7.2-15.0 [.283-.591] | KTKK 1052 | 7.2-15.0 [.283-.591] |
| 14 | KTKK 0523 | 7.2-15.0 [.283-.591] | KTKK 1053 | 7.2-15.0 [.283-.591] |
| 16 | KTKK 0524 | 8.5-19.0 [.335-.748] | KTKK 1054 | 8.5-19.0 [.335-.748] |
| 18 | KTKK 0525 | 8.5-20.0 [.335-.748] | KTKK 1055 | 8.5-19.0 [.335-.748] |
| 20 | KTKK 0526 | 10.0-24.0 [.394-.945] | KTKK 1056 | 10.0-24.0 [.394-.945] |
| 22 | KTKK 0527 | 10.0-24.0 [.394-.945] | KTKK 1057 | 10.0-24.0 [.394-.945] |
| 24 | KTKK 0528 | 15.8-33.0 [.622-1.299] | KTKK 1058 | 15.8-33.0 [.622-1.299] |

#### 100S Low Fire Hazard Material

| | | | | |
|---|---|---|---|---|
| 08 | KTKK 0465 | 5.0-7.0 [.197-.276] | — | — |
| 10 | KTKK 0466 | 6.0-9.0 [.236-.354] | KTKK 1251 | 6.0-9.0 [.236-.354] |
| 12 | KTKK 0467 | 7.2-11.0 [.283-.433] | KTKK 1252 | 7.2-11.0 [.283-.433] |
| 14 | KTKK 0468 | 7.2-11.0 [.283-.433] | KTKK 1253 | 7.2-11.0 [.283-.433] |
| 16 | KTKK 0469 | 8.5-17.0 [.335-.669] | KTKK 1254 | 8.5-17.0 [.335-.669] |
| 18 | KTKK 0470 | 8.5-17.0 [.335-.669] | KTKK 1255 | 8.5-17.0 [.335-.669] |
| 20 | KTKK 0471 | 10.0-21.0 [.394-.827] | KTKK 1256 | 10.0-21.0 [.394-.827] |
| 22 | KTKK 0472 | 10.0-21.0 [.394-.827] | KTKK 1257 | 10.0-21.0 [.394-.827] |
| 24 | KTKK 0473 | 15.8-29.0 [.622-1.142] | KTKK 1258 | 15.8-29.0 [.622-1.142] |

### Pattern 602 Connectors or Connector Code 54

#### 25S Fluid Resistant Elastomer

| Connector Shell Size | Straight Assemblies | | 90° Assemblies | |
|---|---|---|---|---|
| | Part Number | Cable O.D. Range | Part Number | Cable O.D. Range |
| 08 | KTKK 0840 | 5.0-8.0 [.197-.315] | — | — |
| 10 | KTKK 0841 | 6.0-13.0 [.236-.512] | KTKK 0851 | 6.0-13.0 [.236-.512] |
| 12 | KTKK 0842 | 7.2-15.0 [.283-.591] | KTKK 0852 | 7.2-15.0 [.283-.591] |
| 14 | KTKK 0843 | 7.2-15.0 [.283-.591] | KTKK 0853 | 7.2-15.0 [.283-.591] |
| 16 | KTKK 0844 | 8.5-19.0 [.335-.748] | KTKK 0854 | 8.5-19.0 [.335-.748] |
| 18 | KTKK 0845 | 8.5-19.0 [.335-.748] | KTKK 0855 | 8.5-19.0 [.335-.748] |
| 20 | KTKK 0846 | 10.0-24.0 [.394-.945] | KTKK 0856 | 10.0-24.0 [.394-.945] |
| 22 | KTKK 0847 | 10.0-24.0 [.394-.945] | KTKK 0857 | 10.0-24.0 [.394-.945] |
| 24 | KTKK 0848 | 15.8-33.0 [.622-1.299] | KTKK 0858 | 15.8-33.0 [.622-1.299] |

#### 100S Low Fire Hazard Material

| | | | | |
|---|---|---|---|---|
| 08 | KTKK 0612 | 5.0-7.0 [.197-.276] | — | — |
| 10 | KTKK 0613 | 6.0-9.0 [.236-.354] | KTKK 1241 | 6.0-9.0 [.236-.354] |
| 12 | KTKK 0614 | 7.2-11.0 [.283-.433] | KTKK 1242 | 7.2-11.0 [.283-.433] |
| 14 | KTKK 0615 | 7.2-11.0 [.283-.433] | KTKK 1243 | 7.2-11.0 [.283-.433] |
| 16 | KTKK 0616 | 8.5-17.0 [.335-.669] | KTKK 1244 | 8.5-17.0 [.335-.669] |
| 18 | KTKK 0617 | 8.5-17.0 [.335-.669] | KTKK 1245 | 8.5-17.0 [.335-.669] |
| 20 | KTKK 0618 | 10.0-21.0 [.394-.827] | KTKK 1246 | 10.0-21.0 [.394-.827] |
| 22 | KTKK 0619 | 10.0-21.0 [.394-.827] | KTKK 1247 | 10.0-21.0 [.394-.827] |
| 24 | KTKK 0620 | 15.8-29.0 [.622-1.142] | KTKK 1248 | 15.8-29.0 [.622-1.142] |





Catalog 1654025
Revised 3-13

www.te.com

Dimensions are shown for reference purposes only. Specifications subject to change.

Dimensions are in millimeters unless otherwise specified.

USA: +1 800 522 6752
Asia Pacific: +86 0 400 820 6015
UK: +44 800 267 666

For additional support numbers please visit www.te.com

## KTKK Assemblies Screened (Continued)

### Pattern 608 Connectors or Connector Code 79

#### 100S Low Fire Hazard Material

| Connector Shell Size | Straight Assemblies | | 45° Assemblies | | 90° Assemblies | |
|---|---|---|---|---|---|---|
| | Part Number | Cable O.D. Range (mm) | Part Number | Cable O.D. Range (mm) | Part Number | Cable O.D. Range (mm) |
| 08 | KTKK 0444 | 5.0-7.0 [.197-.276] | KTKK 0580 | 5.0-7.0 [.197-.276] | — | — |
| 10 | KTKK 0445 | 6.0-9.0 [.236-.354] | KTKK 0581 | 6.0-9.0 [.236-.354] | KTKK 1021 | 6.0-9.0 [.236-.512] |
| 12 | KTKK 0446 | 7.2-11.0 [.283-.433] | KTKK 0582 | 7.2-11.0 [.283-.433] | KTKK 1022 | 7.2-11.0 [.283-.591] |
| 14 | KTKK 0447 | 7.2-11.0 [.283-.433] | KTKK 0583 | 7.2-11.0 [.283-.433] | KTKK 1023 | 7.2-11.0 [.283-.591] |
| 16 | KTKK 0448 | 8.5-17.0 [.335-.669] | KTKK 0584 | 8.5-17.0 [.335-.669] | KTKK 1024 | 8.5-17.0 [.335-.748] |
| 18 | KTKK 0449 | 8.5-17.0 [.335-.669] | KTKK 0585 | 8.5-17.0 [.335-.669] | KTKK 1025 | 8.5-17.0 [.335-.748] |
| 20 | KTKK 0450 | 10.0-21.0 [.394-.827] | KTKK 0586 | 10.0-21.0 [.394-.827] | KTKK 1026 | 10.0-21.0 [.394-.827] |
| 22 | KTKK 0451 | 10.0-21.0 [.394-.827] | KTKK 0587 | 10.0-21.0 [.394-.827] | KTKK 1027 | 10.0-21.0 [.394-.827] |
| 24 | KTKK 0452 | 15.8-29.0 [.622-1.142] | KTKK 0588 | 15.8-29.0 [.622-1.142] | KTKK 1028 | 15.8-29.0 [.622-1.142] |

### 38999 Series III and IV Connectors or Connector Code 40- Cadmium Plated

#### 25S Fluid Resistant Elastomer

| Connector Shell Size | Straight Assemblies | | 45° Assemblies | | 90° Assemblies | |
|---|---|---|---|---|---|---|
| | Part Number | Cable O.D. Range (mm) | Part Number | Cable O.D. Range (mm) | Part Number | Cable O.D. Range (mm) |
| 08 | KTKK 1110 | 5.0-8.0 [.197-.315] | KTKK 1120 | 5.0-7.0 [.197-.276] | — | — |
| 10 | KTKK 1111 | 6.0-13.0 [.236-.512] | KTKK 1121 | 6.0-9.0 [.236-.354] | KTKK 1131 | 6.0-13.0 [.236-.512] |
| 12 | KTKK 1112 | 7.2-15.0 [.283-.591] | KTKK 1122 | 7.2-11.0 [.283-.433] | KTKK 1132 | 7.2-15.0 [.283-.591] |
| 14 | KTKK 1113 | 7.2-15.0 [.283-.591] | KTKK 1123 | 7.2-11.0 [.283-.433] | KTKK 1133 | 7.2-15.0 [.283-.591] |
| 16 | KTKK 1114 | 8.5-19.0 [.335-.748] | KTKK 1124 | 8.5-17.0 [.335-.669] | KTKK 1134 | 8.5-19.0 [.335-.748] |
| 18 | KTKK 1115 | 8.5-19.0 [.335-.748] | KTKK 1125 | 8.5-17.0 [.335-.669] | KTKK 1135 | 8.5-19.0 [.335-.748] |
| 20 | KTKK 1116 | 10.0-24.0 [.394-.945] | KTKK 1126 | 10.0-21.0 [.394-.827] | KTKK 1136 | 10.0-24.0 [.394-.945] |
| 22 | KTKK 1117 | 10.0-24.0 [.394-.945] | KTKK 1127 | 10.0-21.0 [.394-.827] | KTKK 1137 | 10.0-24.0 [.394-.945] |
| 24 | KTKK 1118 | 15.8-33.0 [.622-1.299] | KTKK 1128 | 15.8-29.0 [.622-1.142] | KTKK 1138 | 15.8-33.0 [.622-1.299] |

#### 100S Low Fire Hazard Material

| | | | | | | |
|---|---|---|---|---|---|---|
| 08 | KTKK 0670 | 5.0-7.0 [.197-.276] | KTKK 0660 | 5.0-7.0 [.197-.276] | — | — |
| 10 | KTKK 0671 | 6.0-9.0 [.236-.354] | KTKK 0661 | 6.0-9.0 [.236-.354] | KTKK 1181 | 6.0-9.0 [.236-.354] |
| 12 | KTKK 0672 | 7.2-11.0 [.283-.433] | KTKK 0662 | 7.2-11.0 [.283-.433] | KTKK 1182 | 7.2-11.0 [.283-.433] |
| 14 | KTKK 0673 | 7.2-11.0 [.283-.433] | KTKK 0663 | 7.2-11.0 [.283-.433] | KTKK 1183 | 7.2-11.0 [.283-.433] |
| 16 | KTKK 0674 | 8.5-17.0 [.335-.669] | KTKK 0664 | 8.5-17.0 [.335-.669] | KTKK 1184 | 8.5-17.0 [.335-.669] |
| 18 | KTKK 0675 | 8.5-17.0 [.335-.669] | KTKK 0665 | 8.5-17.0 [.335-.669] | KTKK 1185 | 8.5-17.0 [.335-.669] |
| 20 | KTKK 0676 | 10.0-21.0 [.394-.827] | KTKK 0666 | 10.0-21.0 [.394-.827] | KTKK 1186 | 10.0-21.0 [.394-.827] |
| 22 | KTKK 0677 | 10.0-21.0 [.394-.827] | KTKK 0667 | 10.0-21.0 [.394-.827] | KTKK 1187 | 10.0-21.0 [.394-.827] |
| 24 | KTKK 0678 | 15.8-29.0 [.622-1.142] | KTKK 0668 | 15.8-29.0 [.622-1.142] | KTKK 1188 | 15.8-29.0 [.622-1.142] |

## KTKK Assemblies Screened (Continued)

### 38999 Series III and IV Connectors or Connector Code 40- Ni Al Bronze

**100S Low Fire Hazard Material**

| Connector Shell Size | Straight Assemblies | | 90° Assemblies | |
|---|---|---|---|---|
| | Part Number | Cable O.D. Range | Part Number | Cable O.D. Range |
| 08 | KTKK 2610 | 5.0-7.0 [.197-.276] | — | — |
| 10 | KTKK 2611 | 6.0-9.0 [.236-.354] | KTKK 2621 | 6.0-9.0 [.236-.354] |
| 12 | KTKK 2612 | 7.2-11.0 [.283-.433] | KTKK 2622 | 7.2-11.0 [.283-.433] |
| 14 | KTKK 2613 | 7.2-11.0 [.283-.433] | KTKK 2623 | 7.2-11.0 [.283-.433] |
| 16 | KTKK 2614 | 8.5-17.0 [.335-.669] | KTKK 2624 | 8.5-17.0 [.335-.669] |
| 18 | KTKK 2615 | 8.5-17.0 [.335-.669] | KTKK 2625 | 8.5-17.0 [.335-.669] |
| 20 | KTKK 2616 | 10.0-21.0 [.394-.827] | KTKK 2626 | 10.0-21.0 [.394-.827] |
| 22 | KTKK 2617 | 10.0-21.0 [.394-.827] | KTKK 2627 | 10.0-21.0 [.394-.827] |
| 24 | KTKK 2618 | 15.8-29.0 [.622-1.142] | KTKK 2628 | 15.8-29.0 [.622-1.142] |

### 38999 Series I and II Connectors or Connector Code 41

**25S Fluid Resistant Elastomer**

| Connector Shell Size | Straight Assemblies | | 90° Assemblies | |
|---|---|---|---|---|
| | Part Number | Cable O.D. Range | Part Number | Cable O.D. Range |
| 08 | KTKK 0500 | 5.0-8.0 [.197-.315] | — | — |
| 10 | KTKK 0501 | 6.0-13.0 [.236-.512] | KTKK 0831 | 6.0-13.0 [.236-.512] |
| 12 | KTKK 0502 | 7.2-15.0 [.283-.591] | KTKK 0832 | 7.2-15.0 [.283-.591] |
| 14 | KTKK 0503 | 7.2-15.0 [.283-.591] | KTKK 0833 | 7.2-15.0 [.283-.591] |
| 16 | KTKK 0504 | 8.5-19.0 [.335-.748] | KTKK 0834 | 8.5-19.0 [.335-.748] |
| 18 | KTKK 0505 | 8.5-19.0 [.335-.748] | KTKK 0835 | 8.5-19.0 [.335-.748] |
| 20 | KTKK 0506 | 10.0-24.0 [.394-.945] | KTKK 0836 | 10.0-24.0 [.394-.945] |
| 22 | KTKK 0507 | 10.0-24.0 [.394-.945] | KTKK 0837 | 10.0-24.0 [.394-.945] |
| 24 | KTKK 0508 | 15.8-33.0 [.622-1.299] | KTKK 0838 | 15.8-33.0 [.622-1.299] |

**100S Low Fire Hazard Material**

| | | | | |
|---|---|---|---|---|
| 08 | KTKK 0640 | 5.0-7.0 [.197-.276] | — | — |
| 10 | KTKK 0641 | 6.0-9.0 [.236-.354] | KTKK 0721 | 6.0-9.0 [.236-.354] |
| 12 | KTKK 0642 | 7.2-11.0 [.283-.433] | KTKK 0722 | 7.2-11.0 [.283-.433] |
| 14 | KTKK 0643 | 7.2-11.0 [.283-.433] | KTKK 0723 | 7.2-11.0 [.283-.433] |
| 16 | KTKK 0644 | 8.5-17.0 [.335-.669] | KTKK 0724 | 8.5-17.0 [.335-.669] |
| 18 | KTKK 0645 | 8.5-17.0 [.335-.669] | KTKK 0725 | 8.5-17.0 [.335-.669] |
| 20 | KTKK 0646 | 10.0-21.0 [.394-.827] | KTKK 0726 | 10.0-21.0 [.394-.827] |
| 22 | KTKK 0647 | 10.0-21.0 [.394-.827] | KTKK 0727 | 10.0-21.0 [.394-.827] |
| 24 | KTKK 0648 | 15.8-29.0 [.622-1.142] | KTKK 0728 | 15.8-29.0 [.622-1.142] |





Catalog 1654025
Revised 3-13

www.te.com

Dimensions are shown for reference purposes only. Specifications subject to change.

Dimensions are in millimeters unless otherwise specified.

USA: +1 800 522 6752
Asia Pacific: +86 0 400 820 6015
UK: +44 800 267 666

For additional support numbers please visit www.te.com

## TCFS/R

### Product Facts

- Screened or unscreened cables
- One-piece part
- Each size covers a wide cable range
- Light weight
- Single- or double-sided assembly

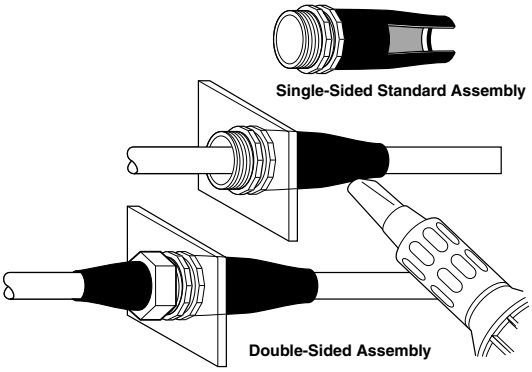


### Applications

Provides environmental sealing and screen continuity to a bulkhead as a cable passes through. The assembly consists of a specifically designed locknut and O-ring seal, onto the rear of which is preinstalled a Raychem brand heat-shrinkable molded part. Feedthrough installation is simply effected by tightening the locknut on the rear of the bulkhead, which compresses the O-ring and ensures that a small knife-edge provides electrical contact between the assembly and the bulkhead.

When heat is applied to the molded part in the form of hot air, a seal to the cable is formed with hot-melt adhesive. When specified for screened cables, the assembly contains a conductive adhesive, which provides electrical continuity between the screen and the bulkhead via Rayaten molded parts.

These molded parts are shielded (screened), heat-shrinkable parts providing shielding levels better than 80 dB at 100 MHz.

| Available in: | Americas | Europe | Asia Pacific |
|---|---|---|---|
| | ■ | ■ | ■ |



Catalog 1654025
Revised 3-13

www.te.com

Dimensions are shown for reference purposes only. Specifications subject to change.

Dimensions are in millimeters unless otherwise specified.

USA: +1 800 522 6752
Asia Pacific: +86 0 400 820 6015
UK: +44 800 267 666

For additional support numbers please visit www.te.com

**TCFS/R** (Continued)

## Part Numbering System

**TCFX* - 12 62C - 0 - 20 - 100 A H**

**Adhesive System**
E = Epoxy (consult factory)
H = S1030 hot melt
W = S1048 hot melt

**Molded Part Type**
A = Straight unscreened
B = 90˚ unscreened
C = Straight screened
D = 45˚ screened
E = 90˚ screened (16–36 only)

**Molded Part Material**
-25 = Semirigid elastomer
-100 = Low fire hazard

**Thread Length**
(may be three digits if more than 95 mm required)
20 mm standard
5 mm increments, minimum 15 mm

**Assembly Modification Code**
0 = Standard assembly
1 = Double-sided assembly (only straight unshielded boot available on double nut)
2 = Same as 1 but with potting ports
3 = Locknut
4 = 60˚ metalwork
5 = Same as 0 but with potting ports

**Feedthrough Material/Finish**
01W = Nickel aluminium bronze, shotblast
19B = Aluminium-alloy–plated cadmium, olive drab, over electroless nickel
19C = Aluminium-alloy–plated electroless nickel
62C = Stainless-steel–plated electroless nickel

**Feedthrough Size**

**Part Description**
TCFS uses a full-length molded part
TCFR uses a shortened molded part
(only available on straight assemblies)

*See Molded Parts Materials Section 4 for -25 and -100 information.





Catalog 1654025
Revised 3-13

www.te.com

Dimensions are shown for reference purposes only. Specifications subject to change.

Dimensions are in millimeters unless otherwise specified.

USA: +1 800 522 6752
Asia Pacific: +86 0 400 820 6015
UK: +44 800 267 666

For additional support numbers please visit www.te.com

## TCFS/R (Continued)

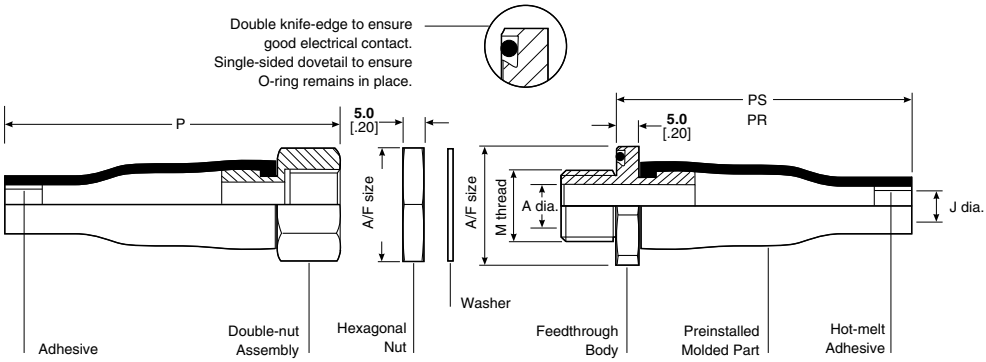


### Product Dimensions

| Feed-through Size | J Diameter* Unshielded a Min. | J Diameter* Unshielded b Max. | J Diameter* Shielded a Min. -25S | J Diameter* Shielded -100S | J Diameter* Shielded b Max. | M Thread | A Dia. Max. | A/F Body | A/F Nut | P ±10% Unscreened P | P ±10% Unscreened PS | P ±10% Unscreened PR | Hole Size |
|---|---|---|---|---|---|---|---|---|---|---|---|---|---|
| TCFS/R-12 | 11 [.43] | 5.6 [.22] | 7.5 [.30] | 6.5 [.26] | 5.0 [.20] | M12 x 1.5 | 7.5 [.30] | 24 [.95] | 17 [.67] | 52 | 50 | 43 | 13.0 [.51] |
| TCFS/R-16 | 15 [.59] | 5.9 [.23] | 12.5 [.49] | 8.5 [.33] | 6.0 [.24] | M16 x 1.5 | 10.2 [.40] | 29 [1.14] | 22 [.87] | 57 | 65 | 48 | 17.0 [.67] |
| TCFS/R-20 | 19 [.75] | 7.1 [.28] | 14.5 [.57] | 10.5 [.41] | 7.2 [.28] | M20 x 1.5 | 14.0 [.55] | 34 [1.34] | 27 [1.06] | 61 | 77 | 52 | 21.0 [.83] |
| TCFS/R-24 | 23 [.90] | 8.4 [.33] | 18.5 [.73] | 16.5 [.65] | 8.5 [.33] | M24 x 1.5 | 19.2 [.76] | 38 [1.50] | 30 [1.18] | 74 | 90 | 65 | 25.0 [.98] |
| TCFS/R-30 | 29 [1.14] | 9.9 [.39] | 23.5 [.93] | 20.5 [.81] | 10.0 [.39] | M30 x 1.5 | 24.2 [.95] | 48 [1.89] | 36 [1.48] | 73 | 115 | 64 | 31.0 [1.22] |
| TCFS/R-36 | 35 [1.38] | 15.7 [.62] | 32.5 [1.28] | 28.5 [1.12] | 15.8 [.62] | M36 x 1.5 | 30.2 [1.49] | 52 [2.05] | 41 [1.61] | 104 | 140 | 95 | 37.0 [1.46] |
| TCFR-48 | 45 [1.77] | 16.8 [.66] | 38.5 [1.52] | 35.5 [1.40] | N/A | M48 x 1.5 | 40.2 [1.58] | 67 [2.64] | 55 [2.17] | 144 | 110 | 135 | 50.0 [1.97] |

*a = Supplied dimension
b = Dimension after free recovery



Catalog 1654025
Revised 3-13

www.te.com

Dimensions are shown for reference purposes only. Specifications subject to change.

Dimensions are in millimeters unless otherwise specified.

USA: +1 800 522 6752
Asia Pacific: +86 0 400 820 6015
UK: +44 800 267 666

For additional support numbers please visit www.te.com

## S1030, S1048, S1275 (Rayaten)

### Product Characteristics

| S1030 Polyolefin Hot-Melt Adhesive | |
|---|---|
| Precoat designation | /180 |
| Type | Polyolefin hot-melt adhesive |
| Operating temperature range | -80°C to 80°C [-112°F to 176°F] |
| Bonding temperature | 120°C [248°F] |
| Minimum shelf life at or below 25°C | 4 years |
| Specification | RK-6017, RT-1050/6 |
| Comments | Excellent water blocking and low temperature |

| S1048 HIgh-Performance Hot-Melt Adhesive | |
|---|---|
| Precoat designation | /86 |
| Type | High-performance hot-melt adhesive |
| Operating temperature range | -55°C to 120°C [-67°F to 248°F] |
| Bonding temperature | 160°C [320°F] |
| Minimum shelf life at or below 25°C | 4 years |
| Specification | RK-6626, RT-1050/3 |
| Comments | Good solvent resistance but requires higher temperature to achieve bonding. Post heating required. Contact TE. |

| S1275 Rayaten Conductive Adhesive* (for KTKK assemblies only) | |
|---|---|
| Type | Electrically conductive polyamide hot-melt adhesives |
| Operating temperature range | -40°C to 70°C [-40°F to 158°F] |
| Bonding temperature | 160°C [320°F] |
| Minimum shelf life at or below 25°C | 2 years |
| Specification | RK-6637 |
| Comments | Conductive adhesive for use with Rayaten parts |

*Not sold separately.



| Available in: | Americas | Europe | Asia Pacific |
|---|---|---|---|
| | ■ | ■ | ■ |



Catalog 1654025
Revised 3-13

www.te.com

Dimensions are shown for reference purposes only. Specifications subject to change.

Dimensions are in millimeters unless otherwise specified.

USA: +1 800 522 6752
Asia Pacific: +86 0 400 820 6015
UK: +44 800 267 666

For additional support numbers please visit www.te.com

## SESK — Shipboard Electrical Splice Kits

### Product Facts

- Waterproofing and corrosion proofing
- Standard sizes that cover most single-, two-, three-, four-, and multi-conductor cables
- Excellent electrical-insulation properties and abrasion protection
- Easy installation
- Operating temperature range of -55°C to +90°C [-67°F to +194°F]
- Approved for new ship construction

### Applications

SESK kits provide fast, waterproof repair of single-, two-, three-, four-, and multi-conductor cables. Kits are suitable for both permanent and temporary repairs. The self-sealing heat-shrinkable tubing used in each kit provides a watertight seal for the inner insulation and outer jacket. The flame-retardant tubing material provides electrical and thermal properties similar to those of most Navy standard cables.

### Installation

Minimum shrink temperature: 121°C [250°F]

### Specifications/Approvals

| Series | Military | Industry | Agency | TE |
|---|---|---|---|---|
| SESK | MIL-DTL-23053* | IEEE-383 Massive Flame Vertical Tray Test | Lloyd's Register | — |
| | USCG CGHQ-3774 | SST-FR | DNV | — |
| | U.S. Navy drawing 5001027-19 | RW-2011 | ABS | — |
| Tubing used to replace cable jacket | SST-FR | SST-FR | — | Sigmaform FR |
| | — | — | SST-FR | RW-2011 |

*Formerly MIL+23053/15A

Note: SESK kits are able to handle a variety of cable sizes and are also available for UJIS cables. Please contact TE for details and part number availability.

| Available in: | Americas | Europe | Asia Pacific |
|---|---|---|---|
| | ■ | ■ | ■ |



Catalog 1654025
Revised 3-13

www.te.com

Dimensions are shown for reference purposes only. Specifications subject to change.

Dimensions are in millimeters unless otherwise specified.

USA: +1 800 522 6752
Asia Pacific: +86 0 400 820 6015
UK: +44 800 267 666

For additional support numbers please visit www.te.com

## Ship or Shore Breakout Kits

### Product Facts

- **Heat-shrinkable boot replaces potting or molding**
- **Flame-retardant tubing has a 3:1 shrink ratio**
- **Kit offers resistance to moisture, fungus, and weathering**
- **Operating temperature range of -55°C to +90°C [-67°F to +194°F]**

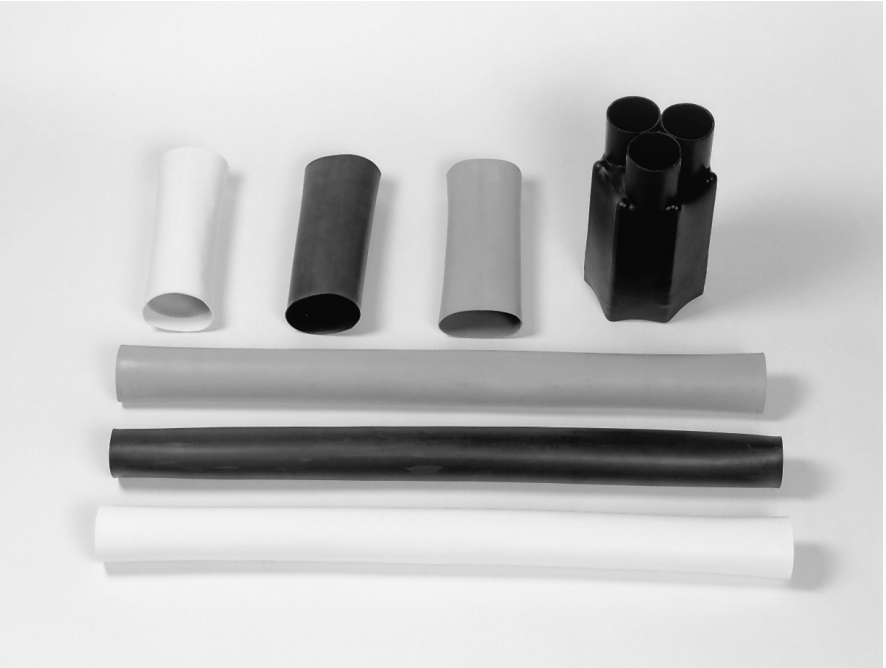

### Applications

Waterproof splices for power cables are available in red, white, and black for positive identification of each conductor.

Bolting power cables together and wrapping the splice with tape used to be the accepted method. Now the in-line splice—with thick-wall, self-sealing, heat-shrinkable products—is the accepted system for strain relief, environmental sealing, and phase identification for power cables. Tubing accommodates a large difference between cable diameters. Sigmaform boots can replace tapes, epoxies, and dips.

### Installation

Minimum shrink temperature: 121°C [250°F]



### Specifications/Approvals

| Series | Military | Industry |
|---|---|---|
| 2E171-4 | NAVSEA 803-5001027-17 | DNV |
| | MIL-C-24368 | Lloyd's |
| | MIL-DTL-23053/15* and MIL-I-81765/1 | ABS |

### Ordering Information

| Part No. | Model |
|---|---|
| 2E171-4 | In-line splice cable sealing kit** |

**Each kit contains:
- Cable breakout boot
- Three-phase identification tubings (red, white, and black)
- Three connector tubings
- A #100 grit emery cloth
- Installation instructions

| Available in: | Americas | Europe | Asia Pacific |
|---|---|---|---|
| | ■ | ■ | ■ |



Catalog 1654025
Revised 3-13

www.te.com

Dimensions are shown for reference purposes only. Specifications subject to change.

Dimensions are in millimeters unless otherwise specified.

USA: +1 800 522 6752
Asia Pacific: +86 0 400 820 6015
UK: +44 800 267 666

For additional support numbers please visit www.te.com

## Custom Maintenance and Repair Kits

### Product Facts

- Customizable to specific platforms (including drawings and instructions)
- Custom sub-assemblies for quick repair
- Designed for use in the field or at a depot
- Lightweight case for easy transportation
- Tooling is available
- Replenishment of parts through re-ordering is available

TE offers Maintenance and Repair Kits that contain all the necessary items required to perform repairs in the field or at a depot.

Typical products include (and are not limited too) the following shown below and on page 7-13.

Applications include: Ship Maintenance, Ground Vehicles and Helicopters

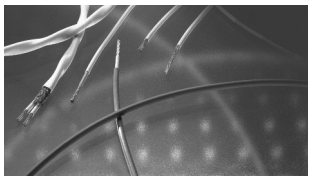

**Wire, Cable and Cable Assemblies**
- Flat
- Coax
- Power
- more....

**Heat-Shrink Tubing**
- Single Wall
- Dual Wall
- Flame Retardant
- more....

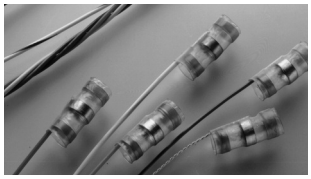

**Shield Terminators and Adapters**
- Cable Terminators
- HexaShield Adapters
- Tinel-Lock Ring
- more....

**Data Bus and MTC Products**
- Data Bus Cables
- Couplers
- Bus and Stub Terminators
- more....



Dimensions are shown for reference purposes only. Specifications subject to change.

Dimensions are in millimeters unless otherwise specified.

USA: +1 800 522 6752
Asia Pacific: +86 0 400 820 6015
UK: +44 800 267 666

For additional support numbers please visit www.te.com

## Custom Maintenance and Repair Kits (Continued)

### Typical Products

**Connectors**
- Military Circular
- ARINC
- RF Coax
- more....

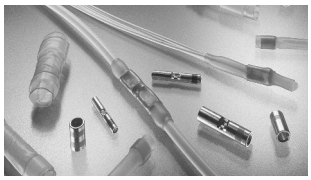

**Terminals, Contacts and Splices**
- SolderTacts Solder Contacts
- Lugs
- MiniSeal Crimp Splices
- more....

**Molded and Harnessing Products**
- RayOLOn Kits
- Heat Shrinkable Repair Tape
- Adhesive and Sealing Products
- more....

**Tooling Products**
- Wire Stripper
- Cutters
- Heat Guns
- more....

### Creating the Kit

Since each kit is a custom piece, our goal is to ensure that the finished kit becomes an indispensible unit for quick repair out in the field or at a depot. We do this by spending time with you to determine the purpose of the kit and how it will be used. All components of the kit will meet your required standards. Prototypes will be built based on your requirements and the recommendations of our Technical Group.



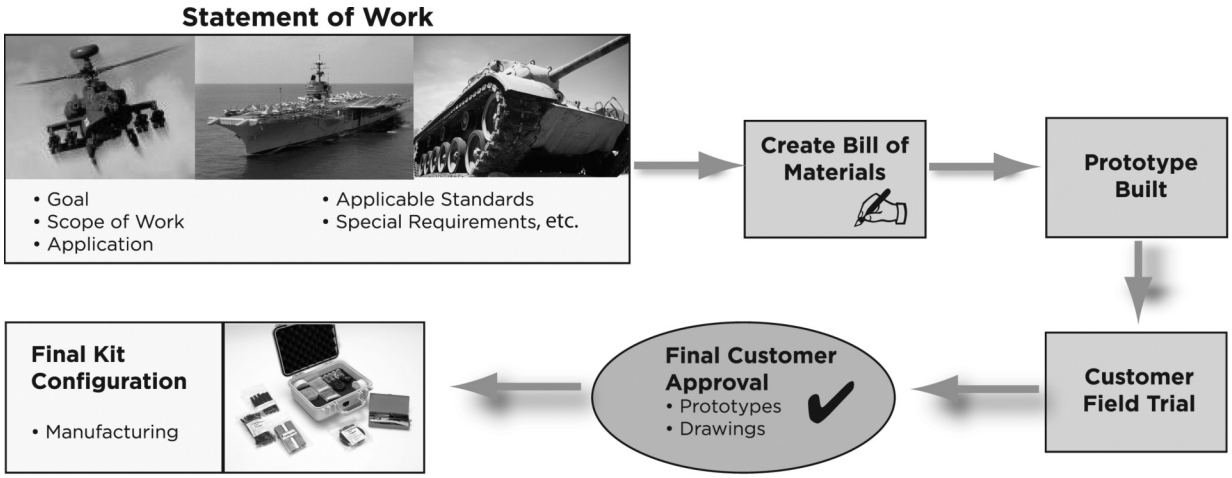




Catalog 1654025
Revised 3-13

www.te.com

Dimensions are shown for reference purposes only. Specifications subject to change.

Dimensions are in millimeters unless otherwise specified.

USA: +1 800 522 6752
Asia Pacific: +86 0 400 820 6015
UK: +44 800 267 666

For additional support numbers please visit www.te.com

## Custom Maintenance and Repair Kits (Continued)

### Completing the Kit

With our design experience in building this type of kit, TE will work with you to propose a kit to fit your specific requirements. This includes customer specified bill of materials and flexible contents.

**Items are clearly marked for easy access.**

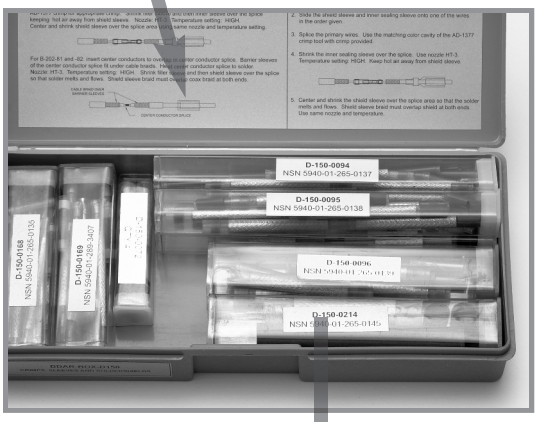

Dimensions are shown for reference purposes only. Specifications subject to change.

Dimensions are in millimeters unless otherwise specified.

USA: +1 800 522 6752
Asia Pacific: +86 0 400 820 6015
UK: +44 800 267 666

For additional support numbers please visit www.te.com

## Raychem Marine High-Voltage Termination & Splice Kits

### Product Facts

- Designed and tested to IEEE-48 and IEEE-404 standards
- Superior environmental sealing
- Polyolefin heat shrink sleeve
- Compact design
- Tough, abrasion resistant, industry proven materials
- Excellent electrical stress control
- Easy to follow installation instructions
- Easier to install in confined spaces (Cold applied kits)

### Description

Marine high-voltage termination and splice kits provide a safe, simple and secure way to terminate both water and non-water blocked cables rated up to 15KV. These kits have been designed to be watertight and feature non-tracking insulation with a revolutionary new electrical stress control system. They are high performing with a history of use in industrial applications.

### Applications

Ideal for a broad range of applications, utilizing commecial and military marine high voltage cables. The marine high voltage kits offer mechanical strength, water tight sealing and the ability to withstand extreme environments.

**MHXX - XXKV**

**Kit Type**
- MHHT (Heat Shrink Termination)
- MHHS (Heat Shrink Splice)
- MHCT (Cold Applied Termination)
- MHCS (Cold Applied Splice)

**Voltage**
- -8KV (0-8KV)
- -15KV (0-15KV)

**Phase Conductor Insulation Diameter**
- -1 (.64 - .95 in.)
- -2 (.95 - 1.25 in.)
- -3 (1.10 - 1.65 in.)
- -4 (.60 - 1.40 in.) (Cold applied splice only)

**Number Of Phase Conductors**
- -1
- -3
- -4

**Number Of Ground Conductors**
- -0
- -3
- -4

**Type Of Shield**
- -G (Gross Shield)
- -PS (Phase Shield/Semi-Con & Gross Shield)

Notes:
1. Recommended overall cable insulation diameter range (1.30 - 3.50 in.)
2. Choose the largest size available that will fit your cable.





Catalog 1654025
Revised 3-13

www.te.com

Dimensions are shown for reference purposes only. Specifications subject to change.

Dimensions are in millimeters unless otherwise specified.

USA: +1 800 522 6752
Asia Pacific: +86 0 400 820 6015
UK: +44 800 267 666

For additional support numbers please visit www.te.com

## Raychem Marine High-Voltage Termination & Splice Kits (Continued)

### Heat Shrink Kits

**MHHT**

*Marine High-Voltage Heat Shrink Termination Kits (0–15 kV)*

The unique high-voltage insulating sleeve is a non-tracking, and erosion-resistant material that does not require periodic cleaning. The material properties have been formulated to be thermally stable and highly resistant to UV degradation, weathering and environmental pollution.

The cable, along with external ground, is sealed from moisture ingress using our high-voltage, heat-activated sealing system. No field engineering or additional accessory kits are required.

Rated to IEEE-48 class 1. Indoor (in enclosures) or outdoor (weather-exposed) use. For use on shielded, non-shielded, water blocked or non-water blocked marine cables.

**MHHT kits offer the following features and benefits:**

- Heat-shrinkable terminations with built-in stress control
- Easy installation
- Rated to IEEE-48-1996, class 1 termination requirements
- Seals out all moisture and contamination and complies to MIL-24640 leakage requirements

*Heat-Shrinkable Terminations with Built-In Stress Control*

This high voltage termination system features a co-extruded one-piece termination. It consists of the same proven non-tracking tube together with a co-extruded, built-in stress control grading layer. This stress control layer is based on ceramic semi-conductor technology (ZnO) and provides superior discharge and impulse performance. When the tubing is shrunk down, the coating softens and sticks to irregular surfaces, providing moisture seals as well as electrical stress control.

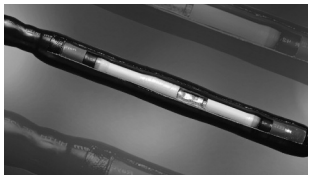

**MHHS**

*Marine High-Voltage Heat Shrink Splice Kits (0-15 kV)*

The heat-shrinkable shielded power cable splices are pre-engineered to offer a compact, low-profile installation with a minimum diameter buildup. The kits contain a solderless grounding kit, consisting of a ground clamp, a ground braid, and a shielding mesh. Heat-shrink feature allows the kits to accommodate out-of-round, out-of-spec cable.

### Cold Applied Kits

**MHCT**

*Marine High-Voltage Cold Applied Termination Kits (0-15 kV)*

MHCT tool-free termination kits have been developed to provide a quick and easy, cold-applied method of terminating 0-15 kV polymeric cables. The MHCT's are designed for indoor conditions.

**MHCT kits offer the following features and benefits:**

- Advanced metal oxide matrix stress control
- Positive placement of stress control patch
- Provided on a crush-resistant core
- Easy installation — allows for repositioning
- Rated to IEEE-48-1996, class 1 termination requirements
- Seals out moisture and contamination, up to 15 psi of water pressure

**MHCS**

*Marine High-Voltage Cold Applied Splice Kits (0-15 kV)*

Cold-applied splice is designed to splice medium voltage cables without the use of a torch or heat gun. The splice consists of a pre-stretched body on a unique holdout design together with a built-in-place Faraday cage. The kit contains integrated sock-type shielding mesh and solderless spring clamps to accommodate different types of metallic shields such as Copper Tape, LC, Flat Strap and others. The re-jacketing system is a wraparound GelWrap splice closure designed to seal the entire splice area and provide mechanical and environmental protection.



Dimensions are shown for reference purposes only. Specifications subject to change.

Dimensions are in millimeters unless otherwise specified.

USA: +1 800 522 6752
Asia Pacific: +86 0 400 820 6015
UK: +44 800 267 666

For additional support numbers please visit www.te.com

## Table of Contents


Introduction . . . . . .8-2
Typical SolderSleeve Device/Installation . . . . . 8-3
Product Selection . . . . . .8-3, 8-4

**Wire-to-Wire Splicing**
- Introduction . . . . . .8-5
- SolderSleeve Wire Splices . . . . . .8-6 to 8-11
- SolderGrip Closed End Connector Splices . . . . . .8-12 to 8-17
- DuraSeal Heat-Shrinkable, Environmentally-Sealed, Nylon-Insulated Crimp Splices . . . . . .8-18, 8-19
- PolyCrimp Heat-Shrinkable Polyethylene Crimp Splices . . . . . .8-20, 8-21
- Cold Applied Splices . . . . . .8-22, 8-23
- MiniSeal High-Performance, Immersion-Resistant Crimp Splices . . . . . .8-24 to 8-27
- 200˚C MiniSeal High-Performance Crimp Splices . . . . . .8-28, 8-29

**Insulated Terminals and Disconnects**
- Introduction . . . . . .8-30
- DuraSeal Heat-Shrinkable, Environmentally-Sealed, Nylon-Insulated Crimp Terminals and Disconnects . . . . . .8-31 to 8-36
- SolderGrip Self-Fixturing Insulated Terminals . . . . . .8-37 to 8-41

**Wire Termination to Pin/Post/Tab**
- Introduction . . . . . .8-42
- SolderSleeve Discrete Wire Terminators . . . . . .8-43 to 8-46

**Shield Termination**
- Introduction . . . . . .8-47
- SolderSleeve Shield Terminators . . . . . .8-48 to 8-53

**Coaxial Cable Termination**
- Introduction . . . . . .8-54
- SolderSleeve Coaxial Cable Terminators . . . . . .8-55, 8-56
- SolderSleeve PCB/Coaxial Cable Terminators . . . . . .8-57, 8-58
- RF One-Step BNC/TNC Connectors . . . . . .8-59 to 8-64

**Cable-to-Cable Splicing**
- Introduction . . . . . .8-65
- SolderShield Shielded and Coaxial Cable Splices . . . . . .8-66 to 8-69
- Raychem C-Wrap Side Entry Repair Sleeve . . . . . .8-70, 8-71

**Shielded Contacts**
- Introduction . . . . . .8-72
- SolderTacts shielded one-piece solder contacts . . . . . .8-73 to 8-81

**Data Bus (MIL-STD-1553B) Components**
- Introduction . . . . . .8-82
- Cables . . . . . .8-83, 8-84
- In-Line Microcouplers: One- and Two- Stub . . . . . .8-85 to 8-87
- Ultra Lightweight In-Line Microcouplers 1- Through 6-Stub . . . . . .8-88 to 8-90
- Box Couplers . . . . . .8-91, 8-92
- Discrete Connectors . . . . . .8-93, 8-94
- Accessories . . . . . .8-95 to 8-99
- Triaxial Size 8 Contacts . . . . . .8-100
- Space-Grade Data Bus Components . . . . . .8-101 to 8-104
- Customer-Specified Harness Assemblies and HarnWare . . . . . .8-105
- Parts List . . . . . .8-105


**Note:** Users should independently evaluate the suitability of the product for their application. Before ordering, check with TE Connectivity for most current data.





Catalog 1654025
Revised 3-13

www.te.com

Dimensions are shown for reference purposes only. Specifications subject to change.

Dimensions are in millimeters unless otherwise specified.

USA: +1 800 522 6752
Asia Pacific: +86 0 400 820 6015
UK: +44 800 267 666

For additional support numbers please visit www.te.com

**Table of Contents** (Continued)

## Introduction

TE's dependable, economical wire and cable termination products provide solutions for hundreds of wire and cable interconnect requirements. All wire termination products are housed inside transparent heat-shrinkable insulation sleeves, which provide inspectability and can provide various levels of environmental protection. Most Raychem brand termination products incorporate a fluxed solder preform, which is essential for a highly controlled soldering process. Other products incorporate controlled crimping or a unique process of combining a twist-on coil with controlled soldering to provide high-reliability joints on the widest variety of conductor types and platings.

SolderSleeve technology ensures high-quality electrical and mechanical performance time after time. Premeasured solder and flux create repeatable, reliable terminations, reducing rejects and field failures. When the SolderSleeve device is heated, the tubing shrinks and the solder preform melts to make a fully insulated, strain-relieved, protected solder connection. Heat-shrinkable tubing provides the benefits of insulation, strain relief, and protection for our controlled crimp products. Many Raychem brand interconnect products have earned UL recognition or MIL-Spec approval.

Many SolderSleeve and related devices are made from polyvinylidene fluoride tubings that meet the requirements of AMS-DTL-23053/8 (formerly MIL-DTL-23053/8).

Raychem brand interconnect devices combine high-strength materials with innovative design for consistent, long-life performance. And because the insulation sleeve is transparent, operators can easily inspect the connection.

TE shrink-to-fit technology even helps reduce inventory, because one device size will fit a wide range of wire gauges, cable diameters, and component shapes.

TE interconnect products are designed for many applications, from simple splices to terminators for sophisticated electronic systems, either sealed or unsealed, and for high- or low-temperature environments.

## Product Selection

### Typical SolderSleeve Device (illustration of shield terminator concept)

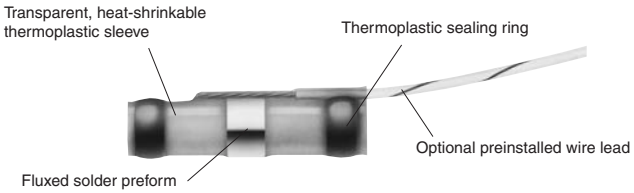


### Typical Installation

1. Insert prepared cable

2. Apply heat

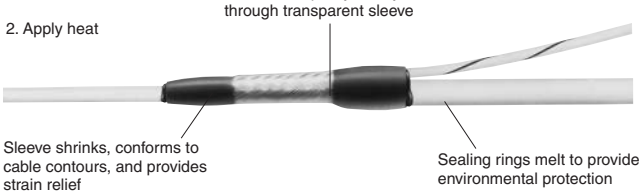


| Application Type | Max. Operating Temp. | Connection Type | Product Description | Series | Page Number |
|---|---|---|---|---|---|
| Wire-to-wire splicing | 125°C [257°F] | Solder | SolderSleeve wire splices | B-155-900X CWT | 8-6 |
| | 150°C [302°F] | Solder | SolderSleeve wire splices | D-110, D-1744 | 8-6 |
| | 125°C [257°F] | Coil and solder | SolderGrip closed end connector splices (stub) | SGRP Series X-58, SGRS | 8-12 |
| | 125°C [257°F] | Crimp | DuraSeal crimp splices | D-406 | 8-18 |
| | 125°C [257°F] | Crimp | PolyCrimp wire splices | C-203 | 8-20 |
| | 150°C [302°F] | Crimp | MiniSeal crimp splices | D-436 (M81824) | 8-24 |
| | 200°C [392°F] | Crimp | MiniSeal crimp splices | D-200 | 8-28 |
| Terminals and disconnects | 125°C [257°F] | Crimp | DuraSeal crimp terminals and disconnects | B-106 | 8-31 |
| | 150°C [302°F] | Coil and solder | SolderGrip terminals | SGRT | 8-37 |
| Wire termination to pin/post/tab | 125°C [257°F] | Solder | SolderSleeve wire terminators | B-155-15XX | 8-43 |
| | 150°C [302°F] | Solder | SolderSleeve wire terminators | D-129, D-141, D-71X | 8-43 |
| Shield termination | 125°C [257°F] | Solder | SolderSleeve shield terminators | B-155-X | 8-48 |
| | 150°C [302°F] | Solder | SolderSleeve shield terminators | S01, S02, M83519, SO63 | 8-48 |
| | 175°C [347°F] | Solder | SolderSleeve shield terminators | SO96, SO175 | 8-48 |
| | 200°C [392°F] | Solder | SolderSleeve shield terminators | S200 | 8-48 |
| Coaxial cable termination | 125°C [257°F] | Solder | SolderSleeve coaxial cable terminators | B-155 | 8-55 |
| | 150°C [302°F] | Solder | SolderSleeve coaxial cable terminators | B-02X, B-04X | 8-55 |
| | 150°C [302°F] | Solder | SolderSleeve PCB/coaxial cable terminators | D-607, B-046 | 8-57 |
| | 135°C [275°F] | Solder | RF one-step BNC/TNC connectors | RBD, RTD | 8-59 |
| Cable-to-cable splicing | 150°C [302°F] | Solder/Crimp | SolderShield cable splices | D-150 | 8-66 |
| Shielded contacts | 150°C [302°F] | Solder | SolderTacts shielded contacts | D-602 | 8-71 |
| Triax connectors | 150°C [302°F] | Solder | Triax discrete connectors | D-621, DK-621 | 8-91 |
| MIL-STD-1553 | 150°C [302°F] | Solder | Triax discrete connectors | D-621, DK-621 | 8-91 |
| Data bus connectors | 150°C [302°F] | Solder | Triax discrete connectors | D-621, DK-621 | 8-91 |
| MIL-STD-1553 In-line couplers | 150°C [302°F] | Solder or connectorized | In-line data bus microcoupler | D-500-04 | 8-83 |
| MIL-STD-1533 | 150°C [302°F] | Connectorized | Data bus box couplers | D-500-025 | 8-89 |
| Triaxial size 8 contacts | 150°C [302°F] | Solder | Size 8, triaxial MIL-C-38999 contacts | D-602X, DK-602 | 8-98 |
| Data bus cables | 150°C [302°F] | Crimp or solder | MIL-STD-1553 B shielded cable | 1061X | 8-81 |
| Data bus terminators | 150°C [302°F] | Solder or connectorized | MIL-STD-1553 78 Ohms and 3000 Ohms terminators | D-621, D-500 | 8-93 |
| Data bus accessories | 150°C [302°F] | Solder or mechanical | Dust caps, braid terminators, splices | D-600, D-150 | 8-93 |





Catalog 1654025
Revised 3-13

www.te.com

Dimensions are shown for reference purposes only. Specifications subject to change.

Dimensions are in millimeters unless otherwise specified.

USA: +1 800 522 6752
Asia Pacific: +86 0 400 820 6015
UK: +44 800 267 666

For additional support numbers please visit www.te.com

## Product Selection (Continued)

| Application Type | Connection Type | Max. Operating Temp. | Product Description | Series | Page Number |
|---|---|---|---|---|---|
| Wire-to-Wire Splicing | Solder | 125°C | SolderSleeve wire splices | B-155-900X | 8-6 |
| | | 150°C | SolderSleeve wire splices | D-110, D-1744 | 8-6 |
| | Crimp | 125°C | DuraSeal crimp splices | D-406 | 8-18 |
| | | 125°C | PolyCrimp crimp splices | C-203 | 8-20 |
| | | 150°C | Cold applied splices | D-436 | 8-22 |
| | | 150°C | MiniSeal crimp splices | D-436 (M81824) | 8-24 |
| | | 200°C | MiniSeal crimp splices | D-200 | 8-28 |
| | Coil and Solder | 125°C | SolderGrip closed end connector splices (stub) | SGRP, SGRS SGRW-X-58 | 8-12 |
| Terminals and Disconnects | Crimp | 125°C | DuraSeal crimp terminals and disconnects | B-106 | 8-31 |
| | Coil and Solder | 150°C | SolderGrip terminals | SGRT | 8-37 |
| Wire Termination to pin/post/tab | Solder | 125°C | SolderSleeve wire terminators | B-155-15XX | 8-43 |
| | | 150°C | SolderSleeve wire terminators | D-129, D-141, D-71X | 8-43 |
| Shield Termination | Solder | 125°C | SolderSleeve shield terminators | B-155-X | 8-48 |
| | | 150°C | SolderSleeve shield terminators | S01, S02, M83519, SO63 | 8-48 |
| | | 175°C | SolderSleeve shield terminators | SO96, SO175 | 8-48 |
| | | 200°C | SolderSleeve shield terminators | S200 | 8-48 |
| Coax Cable Termination | Solder | 125°C | SolderSleeve coaxial cable terminators | B-155-4XXX | 8-55 |
| | | 135°C | RF one-step BNC/TNC connector | RBD, RTD | 8-59 |
| | | 150°C | SolderSleeve coaxial cable terminators | B-02X/04X | 8-55 |
| | | | SolderSleeve PCB/coaxial cable terminators | D-607, B-046 | 8-57 |
| Cable-to-Cable Splicing | Solder/Crimp | 150°C | SolderShield cable splices | D-150, B-202 | 8-66 |
| Shielded Contacts | Solder | 150°C | SolderTacts shielded contacts | D-602 | 8-71 |
| MIL-STD-1553B Data Bus Components | Solder | 150°C | Data bus couplers, connectors, terminators, accessories | D-500, D-600, D(K)-621 | 8-80 |



Catalog 1654025
Revised 3-13

www.te.com

Dimensions are shown for reference purposes only. Specifications subject to change.

Dimensions are in millimeters unless otherwise specified.

USA: +1 800 522 6752
Asia Pacific: +86 0 400 820 6015
UK: +44 800 267 666

For additional support numbers please visit www.te.com

## Introduction

TE offers many products for wire-to-wire splicing: SolderSleeve splicing devices; SolderGrip splices; and DuraSeal and MiniSeal crimp splices.

Like all TE interconnect products, the wire-to-wire splicing devices are rugged and reliable, yet easy to install.

Designed for applications with temperatures up to 150°C [302°F], products in this section include:

- SolderSleeve splicing devices, which can be used to make sealed or unsealed splices. In a single step, they solder, insulate, encapsulate, and strain-relieve a wide range of wire sizes.
- DuraSeal heat-shrinkable nylon crimp splices are easy to use in factory or repair applications. DuraSeal crimp splices provide watertight sealing and superior protection against corrosion, abrasion, and vibration.
- Small, lightweight, and low-profile MiniSeal high-performance crimp splices, which substantially reduce wire bundle size and weight, are QPL-listed to the MIL-S-81824 specification, and are required by the MIL-W-5088 specification.
- SolderGrip splices, which are closed-end connectors utilizing a spiral copper coil that grips and compresses the conductors and allows a prefluxed solder ring to flow to the center of the splicing area, resulting in a high-reliability, repeatable solder joint.
- PolyCrimp heat-shrinkable polyethylene crimp splices offer a one-piece design and translucent tubing which allows for visual inspection of the splice. The dual wall polyethylene tubing provides strain relief and protection against the environment.





Catalog 1654025
Revised 3-13

www.te.com

Dimensions are shown for reference purposes only. Specifications subject to change.

Dimensions are in millimeters unless otherwise specified.

USA: +1 800 522 6752
Asia Pacific: +86 0 400 820 6015
UK: +44 800 267 666

For additional support numbers please visit www.te.com

## SolderSleeve Wire Splices

### Product Facts

- **Transparent polyvinylidene fluoride or polyolefin sleeve provides encapsulation, inspectability, strain relief, and insulation**
- **Prefluxed solder preform provides a controlled soldering process**
- **One-piece design makes installation easy and lowers the installed cost**
- **With one or two wires per end, the NAS 1744 splices meet 75,000 ft [22,000 m] altitude immersion requirement**
- **Thermochromic temperature indicator in the NAS splices facilitates termination and inspection**
- **UL and CUL recognized**

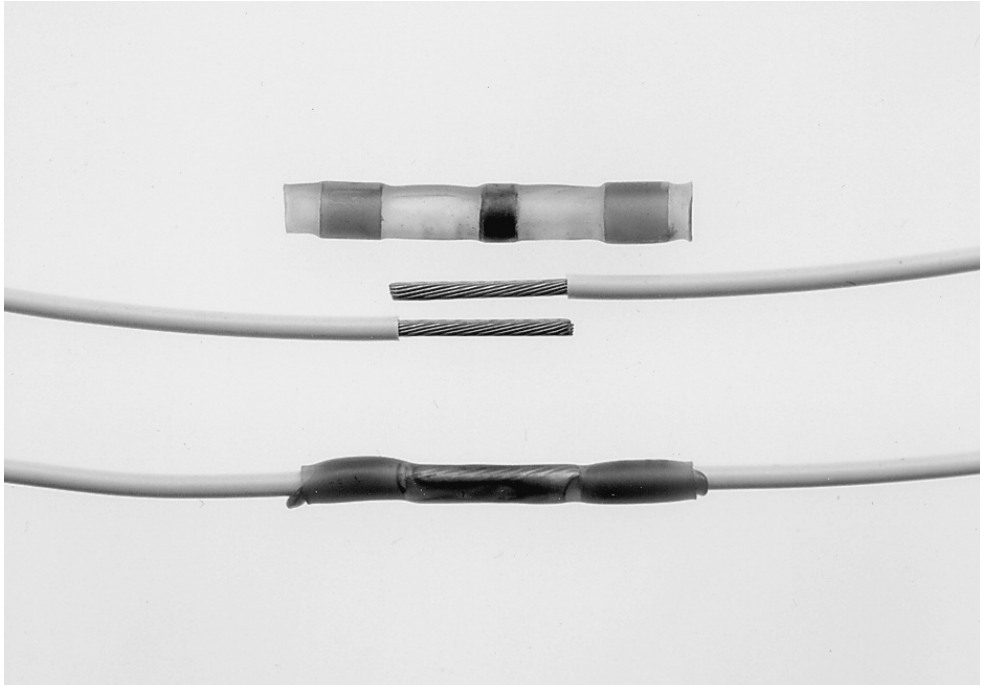

### Applications

In-line wire splices.

### Product Options

| Product Series | Minimum Wire Temperature Rating | Maximum Operating Temperature | Intended Application Environment |
|---|---|---|---|
| B-155 | 85°C [185°F] | 125°C [257°F] | (RoHS) Splashproof |
| CWT | 85°C [185°F] | 125°C [257°F] | Splashproof |
| D-110 | 125°C [257°F] | 150°C [302°F] | Splashproof |
| D-1744 (NAS 1744) | 125°C [257°F] | 150°C [302°F] | Immersion sealed |

**Note:** Cadmium-free option (B-152 series) is available for operating temperature of 125˚C [257˚F]. Consult TE for details.

### Product Selection Process

From the Product Options table above, select the product series appropriate for your application based on the temperature rating and sealing performance required.

***If the application has only one size of wire per side*** and no more than two wires on either side:

1. Determine wire gauge sizes for both sides of splice.
2. Determine number of wires (one or two wires) for each side of splice.
3. Select part numbers from the appropriate table:
   - For B-155 and CWT series (low temperature): Use Table A on page 8-7.
   - For D-110 series (splashproof): Use Table B on page 8-8.
   - For D-1744 series (immersion sealed): Use Table C on page 8-9.

***If the application has more than one size of wire per side*** or more than two wires on either side (or if you prefer to work with CMA or mm$^2$ sizes):

1. Turn to "CMA/mm$^2$ Calculation" on page 8-10 and use the workspace there to calculate the total cross section to be spliced.
2. Use Table E on page 8-11 to select the sleeve recommended for that cross section.

### Notes:

While all combinations listed will provide satisfactory solder joints, the degree of strain relief obtained depends on the outer diameter of the wires being joined. Refer to Table E for the recommended size ranges for the sleeves.

Wires 16 AWG (1.21 mm$^2$) and larger, and wires having more than 19 strands, should be pretinned prior to splicing, to obtain the optimum solder joint quality.

Part selection for wires 26 AWG (0.15 mm$^2$) and smaller is covered on page 8-8.

| Available in: | |
|---|---|
| Americas | ■ |
| Europe | ■ |
| Asia Pacific | ■ |



Dimensions are shown for reference purposes only. Specifications subject to change.

Dimensions are in millimeters unless otherwise specified.

USA: +1 800 522 6752
Asia Pacific: +86 0 400 820 6015
UK: +44 800 267 666

For additional support numbers please visit www.te.com

## Table A: B-155 Series Selection

**SolderSleeve Wire Splices** (Continued)

| Side A: Size and Number of Conductors | | Side B: 26 AWG 1 | 26 AWG 2 | 24 AWG 1 | 24 AWG 2 | 22 AWG 1 | 22 AWG 2 | 20 AWG 1 | 20 AWG 2 |
|---|---|---|---|---|---|---|---|---|---|
| 26 AWG | 1 | B-155-9001 | B-155-9001 | B-155-9001 | B-155-9001 | B-155-9001 | B-155-9002 | B-155-9002 | B-155-9002 |
| | 2 | B-155-9001 | B-1559001 | B-155-9001 | B-155-9002 | B-155-9001 | B-155-9002 | B-155-9002 | B-155-9002 |
| 24 AWG | 1 | B-155-9001 | B-155-9001 | B-155-9001 | B-155-9001 | B-155-9001 | B-155-9002 | B-155-9002 | B-155-9002 |
| | 2 | B-155-9001 | B-155-9002 | B-155-9001 | B-155-9002 | B-155-9002 | B-155-9002 | B-155-9002 | B-155-9002 |
| 22 AWG | 1 | B-155-9001 | B-155-9001 | B-155-9001 | B-155-9002 | B-155-9002 | B-155-9002 | B-155-9002 | B-155-9002 |
| | 2 | B-155-9002 | B-155-9002 | B-155-9002 | B-155-9002 | B-155-9002 | B-155-9002 | B-155-9002 | B-155-9003 |
| 20 AWG | 1 | B-155-9002 | B-155-9002 | B-155-9002 | B-155-9002 | B-155-9002 | B-155-9002 | B-155-9002 | B-155-9003 |
| | 2 | B-155-9002 | B-155-9002 | B-155-9002 | B-155-9002 | B-155-9002 | B-155-9003 | B-155-9003 | B-155-9003 |
| 18 AWG | 1 | B-155-9002 | B-155-9002 | B-155-9002 | B-155-9002 | B-155-9002 | B-155-9002 | B-155-9002 | B-155-9003 |
| | 2 | B-155-9003 | B-155-9003 | B-155-9003 | B-155-9003 | B-155-9003 | B-155-9003 | B-155-9003 | B-155-9003 |
| 16 AWG | 1 | B-155-9002 | B-155-9002 | B-155-9002 | B-155-9002 | B-155-9002 | B-155-9003 | B-155-9003 | B-155-9003 |
| | 2 | B-155-9003 | B-155-9003 | B-155-9003 | B-155-9003 | B-155-9003 | B-155-9003 | B-155-9003 | B-155-9003 |
| 14 AWG | 1 | B-155-9003 | B-155-9003 | B-155-9003 | B-155-9003 | B-155-9003 | B-1559003 | B-155-9003 | B-155-9003 |
| | 2 | B-155-9004 | B-155-9004 | B-155-9004 | B-155-9004 | B-155-9004 | B-155-9004 | B-155-9004 | B-155-9004 |
| 12 AWG | 1 | B-155-9003 | B-155-9003 | B-155-9003 | B-155-9003 | B-155-9003 | B-155-9003 | B-155-9003 | B-155-9004 |
| | 2 | B-155-9005 | B-155-9005 | B-155-9005 | B-155-9005 | B-155-9005 | B-155-9005 | B-155-9005 | B-1559005 |
| 10 AWG | 1 | B-155-9005 | B-155-9005 | B-155-9005 | B-155-9005 | B-155-9005 | B-155-9005 | B-155-9005 | B-155-9005 |

| Side A: Size and Number of Conductors | | Side B: 18 AWG 1 | 18 AWG 2 | 16 AWG 1 | 16 AWG 2 | 14 AWG 1 | 14 AWG 2 | 12 AWG 1 | 12 AWG 2 | 10 AWG 1 |
|---|---|---|---|---|---|---|---|---|---|---|
| 26 AWG | 1 | B-155-9002 | B-155-9003 | B-155-9002 | B-155-9003 | B-155-9003 | B-155-9004 | B-155-9003 | B-155-9005 | B-155-9005 |
| | 2 | B-155-9002 | B-155-9003 | B-155-9002 | B-155-9003 | B-155-9003 | B-155-9004 | B-155-9003 | B-155-9005 | B-155-9005 |
| 24 AWG | 1 | B-155-9002 | B-155-9003 | B-155-9002 | B-155-9003 | B-155-9003 | B-155-9004 | B-155-9003 | B-155-9005 | B-155-9005 |
| | 2 | B-155-9002 | B-155-9003 | B-155-9002 | B-155-9003 | B-155-9003 | B-155-9004 | B-155-9003 | B-155-9005 | B-155-9005 |
| 22 AWG | 1 | B-155-9002 | B-155-9003 | B-155-9002 | B-155-9003 | B-155-9003 | B-155-9004 | B-155-9003 | B-155-9005 | B-155-9005 |
| | 2 | B-155-9002 | B-155-9003 | B-155-9003 | B-155-9003 | B-155-9003 | B-155-9004 | B-155-9003 | B-155-9005 | B-155-9005 |
| 20 AWG | 1 | B-155-9002 | B-155-9003 | B-155-9003 | B-155-9003 | B-155-9003 | B-155-9004 | B-155-9003 | B-155-9005 | B-155-9005 |
| | 2 | B-155-9003 | B-155-9003 | B-155-9003 | B-155-9003 | B-155-9003 | B-155-9004 | B-155-9004 | B-155-9005 | B-155-9005 |
| 18 AWG | 1 | B-155-9003 | B-155-9003 | B-155-9003 | B-155-9003 | B-155-9003 | B-155-9004 | B-155-9004 | B-155-9005 | B-155-9005 |
| | 2 | B-155-9003 | B-155-9003 | B-155-9003 | B-155-9004 | B-155-9003 | B-155-9004 | B-155-9004 | B-155-9005 | B-155-9005 |
| 16 AWG | 1 | B-155-9003 | B-155-9003 | B-155-9003 | B-155-9003 | B-155-9003 | B-155-9004 | B-155-9004 | B-155-9005 | B-155-9005 |
| | 2 | B-155-9003 | B-155-9004 | B-155-9003 | B-155-9004 | B-155-9004 | B-155-9005 | B-155-9004 | B-155-9005 | B-155-9005 |
| 14 AWG | 1 | B-155-9003 | B-155-9003 | B-155-9003 | B-155-9004 | B-155-9003 | B-155-9004 | B-155-9004 | B-155-9005 | B-155-9005 |
| | 2 | B-155-9004 | B-155-9004 | B-155-9004 | B-155-9005 | B-155-9004 | B-155-9005 | B-155-9005 | B-155-9005 | B-155-9005 |
| 12 AWG | 1 | B-155-9004 | B-155-9004 | B-155-9004 | B-155-9004 | B-155-9004 | B-155-9005 | B-155-9004 | B-155-9005 | B-155-9005 |
| | 2 | B-155-9005 | B-155-9005 | B-155-9005 | B-155-9005 | B-155-9005 | B-155-9005 | B-155-9005 | B-155-9005 | B-155-9005 |
| 10 AWG | 1 | B-155-9005 | B-155-9005 | B-155-9005 | B-155-9005 | B-155-9005 | B-155-9005 | B-155-9005 | B-155-9005 | B-155-9005 |

## Table A: CWT Series Selection

| Side A: Size and Number of Conductors | | Side B: 26 AWG 1 | 26 AWG 2 | 24 AWG 1 | 24 AWG 2 | 22 AWG 1 | 22 AWG 2 | 20 AWG 1 | 20 AWG 2 |
|---|---|---|---|---|---|---|---|---|---|
| 26 AWG | 1 | CWT-9001 | CWT-9001 | CWT-9001 | CWT-9001 | CWT-9001 | CWT-9002 | CWT-9002 | CWT-9002 |
| | 2 | CWT-9001 | CWT9001 | CWT-9001 | CWT-9002 | CWT-9001 | CWT-9002 | CWT-9002 | CWT-9002 |
| 24 AWG | 1 | CWT-9001 | CWT-9001 | CWT-9001 | CWT-9001 | CWT-9001 | CWT-9002 | CWT-9002 | CWT-9002 |
| | 2 | CWT-9001 | CWT-9002 | CWT-9001 | CWT-9002 | CWT-9002 | CWT-9002 | CWT-9002 | CWT-9002 |
| 22 AWG | 1 | CWT-9001 | CWT-9001 | CWT-9001 | CWT-9002 | CWT-9002 | CWT-9002 | CWT-9002 | CWT-9002 |
| | 2 | CWT-9002 | CWT-9002 | CWT-9002 | CWT-9002 | CWT-9002 | CWT-9002 | CWT-9002 | CWT-9003 |
| 20 AWG | 1 | CWT-9002 | CWT-9002 | CWT-9002 | CWT-9002 | CWT-9002 | CWT-9002 | CWT-9002 | CWT-9003 |
| | 2 | CWT-9002 | CWT-9002 | CWT-9002 | CWT-9002 | CWT-9002 | CWT-9003 | CWT-9003 | CWT-9003 |
| 18 AWG | 1 | CWT-9002 | CWT-9002 | CWT-9002 | CWT-9002 | CWT-9002 | CWT-9002 | CWT-9002 | CWT-9003 |
| | 2 | CWT-9003 | CWT-9003 | CWT-9003 | CWT-9003 | CWT-9003 | CWT-9003 | CWT-9003 | CWT-9003 |
| 16 AWG | 1 | CWT-9002 | CWT-9002 | CWT-9002 | CWT-9002 | CWT-9002 | CWT-9003 | CWT-9003 | CWT-9003 |
| | 2 | CWT-9003 | CWT-9003 | CWT-9003 | CWT-9003 | CWT-9003 | CWT-9003 | CWT-9003 | CWT-9003 |
| 14 AWG | 1 | CWT-9003 | CWT-9003 | CWT-9003 | CWT-9003 | CWT-9003 | CWT9003 | CWT-9003 | CWT-9003 |
| | 2 | CWT-9004 | CWT-9004 | CWT-9004 | CWT-9004 | CWT-9004 | CWT-9004 | CWT-9004 | CWT-9004 |
| 12 AWG | 1 | CWT-9003 | CWT-9003 | CWT-9003 | CWT-9003 | CWT-9003 | CWT-9003 | CWT-9003 | CWT-9004 |
| | 2 | CWT-9005 | CWT-9005 | CWT-9005 | CWT-9005 | CWT-9005 | CWT-9005 | CWT-9005 | CWT9005 |
| 10 AWG | 1 | CWT-9005 | CWT-9005 | CWT-9005 | CWT-9005 | CWT-9005 | CWT-9005 | CWT-9005 | CWT-9005 |

| Side A: Size and Number of Conductors | | Side B: 18 AWG 1 | 18 AWG 2 | 16 AWG 1 | 16 AWG 2 | 14 AWG 1 | 14 AWG 2 | 12 AWG 1 | 12 AWG 2 | 10 AWG 1 |
|---|---|---|---|---|---|---|---|---|---|---|
| 26 AWG | 1 | CWT-9002 | CWT-9003 | CWT-9002 | CWT-9003 | CWT-9003 | CWT-9004 | CWT-9003 | CWT-9005 | CWT-9005 |
| | 2 | CWT-9002 | CWT-9003 | CWT-9002 | CWT-9003 | CWT-9003 | CWT-9004 | CWT-9003 | CWT-9005 | CWT-9005 |
| 24 AWG | 1 | CWT-9002 | CWT-9003 | CWT-9002 | CWT-9003 | CWT-9003 | CWT-9004 | CWT-9003 | CWT-9005 | CWT-9005 |
| | 2 | CWT-9002 | CWT-9003 | CWT-9002 | CWT-9003 | CWT-9003 | CWT-9004 | CWT-9003 | CWT-9005 | CWT-9005 |
| 22 AWG | 1 | CWT-9002 | CWT-9003 | CWT-9002 | CWT-9003 | CWT-9003 | CWT-9004 | CWT-9003 | CWT-9005 | CWT-9005 |
| | 2 | CWT-9002 | CWT-9003 | CWT-9003 | CWT-9003 | CWT-9003 | CWT-9004 | CWT-9003 | CWT-9005 | CWT-9005 |
| 20 AWG | 1 | CWT-9002 | CWT-9003 | CWT-9003 | CWT-9003 | CWT-9003 | CWT-9004 | CWT-9003 | CWT-9005 | CWT-9005 |
| | 2 | CWT-9003 | CWT-9003 | CWT-9003 | CWT-9003 | CWT-9003 | CWT-9004 | CWT-9004 | CWT-9005 | CWT-9005 |
| 18 AWG | 1 | CWT-9003 | CWT-9003 | CWT-9003 | CWT-9003 | CWT-9003 | CWT-9004 | CWT-9004 | CWT-9005 | CWT-9005 |
| | 2 | CWT-9003 | CWT-9003 | CWT-9003 | CWT-9004 | CWT-9003 | CWT-9004 | CWT-9004 | CWT-9005 | CWT-9005 |
| 16 AWG | 1 | CWT-9003 | CWT-9003 | CWT-9003 | CWT-9003 | CWT-9003 | CWT-9004 | CWT-9004 | CWT-9005 | CWT-9005 |
| | 2 | CWT-9003 | CWT-9004 | CWT-9003 | CWT-9004 | CWT-9004 | CWT-9005 | CWT-9004 | CWT-9005 | CWT-9005 |
| 14 AWG | 1 | CWT-9003 | CWT-9003 | CWT-9003 | CWT-9004 | CWT-9003 | CWT-9004 | CWT-9004 | CWT-9005 | CWT-9005 |
| | 2 | CWT-9004 | CWT-9004 | CWT-9004 | CWT-9005 | CWT-9004 | CWT-9005 | CWT-9005 | CWT-9005 | CWT-9005 |
| 12 AWG | 1 | CWT-9004 | CWT-9004 | CWT-9004 | CWT-9004 | CWT-9004 | CWT-9005 | CWT-9004 | CWT-9005 | CWT-9005 |
| | 2 | CWT-9005 | CWT-9005 | CWT-9005 | CWT-9005 | CWT-9005 | CWT-9005 | CWT-9005 | CWT-9005 | CWT-9005 |
| 10 AWG | 1 | CWT-9005 | CWT-9005 | CWT-9005 | CWT-9005 | CWT-9005 | CWT-9005 | CWT-9005 | CWT-9005 | B-155-9005 |





Catalog 1654025
Revised 3-13

www.te.com

Dimensions are shown for reference purposes only. Specifications subject to change.

Dimensions are in millimeters unless otherwise specified.

USA: +1 800 522 6752
Asia Pacific: +86 0 400 820 6015
UK: +44 800 267 666

For additional support numbers please visit www.te.com

## SolderSleeve Wire Splices (Continued)

### Table B: D-110 Series Selection

| Side A: Size and Number of Conductors | | Side B: Size and Number of Conductors | | | | | | | |
|---|---|---|---|---|---|---|---|---|---|
| | | 26 AWG | | 24 AWG | | 22 AWG | | 20 AWG | |
| | | 1 | 2 | 1 | 2 | 1 | 2 | 1 | 2 |
| 26 AWG | 1 | D-110-35 | D-110-35 | D-110-35 | D-110-35 | D-110-35 | D-110-41 | D-110-41 | D-110-41 |
| | 2 | D-110-35 | D-110-35 | D-110-35 | D-110-41 | D-110-35 | D-110-41 | D-110-41 | D-110-41 |
| 24 AWG | 1 | D-110-35 | D-110-35 | D-110-35 | D-110-35 | D-110-35 | D-110-41 | D-110-41 | D-110-41 |
| | 2 | D-110-35 | D-110-41 | D-110-35 | D-110-41 | D-110-41 | D-110-41 | D-110-41 | D-110-41 |
| 22 AWG | 1 | D-110-35 | D-110-35 | D-110-35 | D-110-41 | D-110-41 | D-110-41 | D-110-41 | D-110-41 |
| | 2 | D-110-41 | D-110-41 | D-110-41 | D-110-41 | D-110-41 | D-110-41 | D-110-41 | D-110-0181 |
| 20 AWG | 1 | D-110-41 | D-110-41 | D-110-41 | D-110-41 | D-110-41 | D-110-41 | D-110-41 | D-110-0181 |
| | 2 | D-110-41 | D-110-41 | D-110-41 | D-110-41 | D-110-41 | D-110-0181 | D-110-0181 | D-110-0181 |
| 18 AWG | 1 | D-110-41 | D-110-41 | D-110-41 | D-110-41 | D-110-41 | D-110-41 | D-110-41 | D-110-0181 |
| | 2 | D-110-0181 | D-110-0181 | D-110-0181 | D-110-0181 | D-110-0181 | D-110-0101 | D-110-0101 | D-110-0101 |
| 16 AWG | 1 | D-110-41 | D-110-41 | D-110-41 | D-110-41 | D-110-41 | D-110-0181 | D-110-0181 | D-110-0181 |
| | 2 | D-110-0101 | D-110-0101 | D-110-0101 | D-110-0101 | D-110-0181 | D-110-0101 | D-110-0101 | D-110-0101 |
| 14 AWG | 1 | D-110-0181 | D-110-0181 | D-110-0181 | D-110-0181 | D-110-0181 | D-110-0101 | D-110-0101 | D-110-0101 |
| | 2 | D-110-0101 | D-110-0101 | D-110-0101 | D-110-0101 | D-110-0101 | D-110-0090 | D-110-0101 | D-110-0090 |
| 12 AWG | 1 | D-110-0101 | D-110-0101 | D-110-0101 | D-110-0101 | D-110-0101 | D-110-0101 | D-110-0101 | D-110-0101 |
| | 2 | D-110-0090 | D-110-0090 | D-110-0090 | D-110-0090 | D-110-0090 | D-110-0090 | D-110-0090 | D-110-0090 |
| 10 AWG | 1 | D-110-0090 | D-110-0090 | D-110-0090 | D-110-0090 | D-110-0090 | D-110-0083 | D-110-0083 | D-110-0083 |

| Side A: Size and Number of Conductors | | Side B: Size and Number of Conductors | | | | | | | | |
|---|---|---|---|---|---|---|---|---|---|---|
| | | 18 AWG | | 16 AWG | | 14 AWG | | 12 AWG | | 10 AWG |
| | | 1 | 2 | 1 | 2 | 1 | 2 | 1 | 2 | 1 |
| 26 AWG | 1 | D-110-41 | D-110-0181 | D-110-41 | D-110-0101 | D-110-0181 | D-110-0101 | D-110-0101 | D-110-0090 | D-110-0090 |
| | 2 | D-110-41 | D-110-0181 | D-110-41 | D-110-0101 | D-110-0181 | D-110-0101 | D-110-0101 | D-110-0090 | D-110-0090 |
| 24 AWG | 1 | D-110-41 | D-110-0181 | D-110-41 | D-110-0101 | D-110-0181 | D-110-0101 | D-110-0101 | D-110-0090 | D-110-0090 |
| | 2 | D-110-41 | D-110-0181 | D-110-41 | D-110-0101 | D-110-0181 | D-110-0101 | D-110-0101 | D-110-0090 | D-110-0090 |
| 22 AWG | 1 | D-110-41 | D-110-0181 | D-110-41 | D-110-0181 | D-110-0181 | D-110-0101 | D-110-0101 | D-110-0090 | D-110-0090 |
| | 2 | D-110-41 | D-110-0101 | D-110-0181 | D-110-0101 | D-110-0101 | D-110-0090 | D-110-0101 | D-110-0090 | D-110-0090 |
| 20 AWG | 1 | D-110-41 | D-110-0101 | D-110-0181 | D-110-0101 | D-110-0101 | D-110-0101 | D-110-0101 | D-110-0090 | D-110-0090 |
| | 2 | D-110-0181 | D-110-0101 | D-110-0181 | D-110-0101 | D-110-0101 | D-110-0090 | D-110-0101 | D-110-0090 | D-110-0090 |
| 18 AWG | 1 | D-110-0181 | D-110-0101 | D-110-0181 | D-110-0101 | D-110-0101 | D-110-0090 | D-110-0101 | D-110-0090 | D-110-0090 |
| | 2 | D-110-0101 | D-110-0101 | D-110-0101 | D-110-0101 | D-110-0101 | D-110-0090 | D-110-0090 | D-110-0090 | D-110-0083 |
| 16 AWG | 1 | D-110-0181 | D-110-0101 | D-110-0181 | D-110-0101 | D-110-0101 | D-110-0090 | D-110-0101 | D-110-0090 | D-110-0090 |
| | 2 | D-110-0101 | D-110-0101 | D-110-0101 | D-110-0090 | D-110-0101 | D-110-0090 | D-110-0090 | D-110-0083 | D-110-0083 |
| 14 AWG | 1 | D-110-0101 | D-110-0101 | D-110-0101 | D-110-0101 | D-110-0101 | D-110-0090 | D-110-0090 | D-110-0090 | D-110-0083 |
| | 2 | D-110-0090 | D-110-0090 | D-110-0090 | D-110-0090 | D-110-0090 | D-110-0090 | D-110-0090 | D-110-0083 | D-110-0083 |
| 12 AWG | 1 | D-110-0101 | D-110-0090 | D-110-0101 | D-110-0090 | D-110-0090 | D-110-0090 | D-110-0090 | D-110-0083 | D-110-0083 |
| | 2 | D-110-0090 | D-110-0090 | D-110-0090 | D-110-0083 | D-110-0090 | D-110-0083 | D-110-0083 | D-110-0083 | D-110-0083 |
| 10 AWG | 1 | D-110-0083 | D-110-0083 | D-110-0083 | D-110-0083 | D-110-0083 | D-110-0083 | D-110-0083 | D-110-0083 | D-110-0083 |

### Fine Wire Splices 26 AWG (0.15 mm$^2$) and Smaller

| Part No. | Inside Diameter | | |
|---|---|---|---|
| | As Supplied* | Fully Recovered** | Length*** |
| D-110-0071 | 0.9 [0.035] | 0.6 [0.025] | 4.7 [0.185] |
| D-110-0213 | 0.9 [0.035] | 0.6 [0.025] | 4.2 [0.165] |
| D-110-0214 | 0.6 [0.025] | 0.3 [0.013] | 6.3 [0.250] |
| D-110-0217 | 1.0 [0.040] | 0.6 [0.025) | 9.1 [0.360] |
| D-110-40 | 0.6 [0.025] | 0.5 [0.021] | 5.1 [0.200] |

**Note:** Micro SolderSleeve terminations are used for splicing wires smaller than 26 AWG [0.15 mm$^2$].
*Minimum. Wire insulation must be smaller than this.
**Maximum. Wire insulation and combined conductor diameters must be greater than this.
***Nominal. Wire strip length must be approximately one-half of this.



Dimensions are shown for reference purposes only. Specifications subject to change.

Dimensions are in millimeters unless otherwise specified.

USA: +1 800 522 6752
Asia Pacific: +86 0 400 820 6015
UK: +44 800 267 666

For additional support numbers please visit www.te.com

## SolderSleeve Wire Splices (Continued)

### Table C:
### D-1744 Series Selection

| Side A: Size and Number of Conductors | | Side B: Size and Number of Conductors | | | | | | | |
|---|---|---|---|---|---|---|---|---|---|
| | | 26 AWG | | 24 AWG | | 22 AWG | | 20 AWG | |
| | | 1 | 2 | 1 | 2 | 1 | 2 | 1 | 2 |
| 26 AWG | 1 | D-1744-01 | D-1744-01 | D-1744-01 | D-1744-01 | D-1744-01 | D-1744-01 | D-1744-01 | D-1744-02 |
| | 2 | D-1744-01 | D-1744-01 | D-1744-01 | D-1744-01 | D-1744-01 | D-1744-02 | D-1744-01 | D-1744-02 |
| 24 AWG | 1 | D-1744-01 | D-1744-01 | D-1744-01 | D-1744-01 | D-1744-01 | D-1744-01 | D-1744-01 | D-1744-02 |
| | 2 | D-1744-01 | D-1744-01 | D-1744-01 | D-1744-01 | D-1744-01 | D-1744-02 | D-1744-02 | D-1744-02 |
| 22 AWG | 1 | D-1744-01 | D-1744-01 | D-1744-01 | D-1744-01 | D-1744-01 | D-1744-02 | D-1744-01 | D-1744-02 |
| | 2 | D-1744-01 | D-1744-02 | D-1744-01 | D-1744-02 | D-1744-02 | D-1744-02 | D-1744-02 | D-1744-02 |
| 20 AWG | 1 | D-1744-01 | D-1744-01 | D-1744-01 | D-1744-02 | D-1744-01 | D-1744-02 | D-1744-02 | D-1744-02 |
| | 2 | D-1744-02 | D-1744-02 | D-1744-02 | D-1744-02 | D-1744-02 | D-1744-02 | D-1744-02 | D-1744-03 |
| 18 AWG | 1 | D-1744-02 | D-1744-02 | D-1744-02 | D-1744-02 | D-1744-02 | D-1744-02 | D-1744-02 | D-1744-03 |
| | 2 | D-1744-03 | D-1744-03 | D-1744-03 | D-1744-03 | D-1744-03 | D-1744-03 | D-1744-03 | D-1744-03 |
| 16 AWG | 1 | D-1744-02 | D-1744-02 | D-1744-02 | D-1744-02 | D-1744-02 | D-1744-02 | D-1744-02 | D-1744-03 |
| | 2 | D-1744-03 | D-1744-03 | D-1744-03 | D-1744-03 | D-1744-03 | D-1744-03 | D-1744-03 | D-1744-03 |
| 14 AWG | 1 | D-1744-03 | D-1744-03 | D-1744-03 | D-1744-03 | D-1744-03 | D-1744-03 | D-1744-03 | D-1744-03 |
| | 2 | D-1744-03 | D-1744-03 | D-1744-03 | D-1744-03 | D-1744-03 | D-1744-03 | D-1744-03 | D-1744-04 |
| 12 AWG | 1 | D-1744-03 | D-1744-03 | D-1744-03 | D-1744-03 | D-1744-03 | D-1744-03 | D-1744-04 | D-1744-04 |
| | 2 | D-1744-04 | D-1744-04 | D-1744-04 | — | D-1744-04 | — | — | — |

| Side A: Size and Number of Conductors | | Side B: Size and Number of Conductors | | | | | | | |
|---|---|---|---|---|---|---|---|---|---|
| | | 18 AWG | | 16 AWG | | 14 AWG | | 12 AWG | |
| | | 1 | 2 | 1 | 2 | 1 | 2 | 1 | 2 |
| 26 AWG | 1 | D-1744-02 | D-1744-03 | D-1744-02 | D-1744-03 | D-1744-03 | D-1744-03 | D-1744-03 | D-1744-04 |
| | 2 | D-1744-02 | D-1744-03 | D-1744-02 | D-1744-03 | D-1744-03 | D-1744-03 | D-1744-03 | D-1744-04 |
| 24 AWG | 1 | D-1744-02 | D-1744-03 | D-1744-02 | D-1744-03 | D-1744-03 | D-1744-03 | D-1744-03 | D-1744-04 |
| | 2 | D-1744-02 | D-1744-03 | D-1744-02 | D-1744-03 | D-1744-03 | D-1744-03 | D-1744-03 | — |
| 22 AWG | 1 | D-1744-02 | D-1744-03 | D-1744-02 | D-1744-03 | D-1744-03 | D-1744-03 | D-1744-03 | D-1744-04 |
| | 2 | D-1744-02 | D-1744-03 | D-1744-02 | D-1744-03 | D-1744-03 | D-1744-03 | D-1744-03 | — |
| 20 AWG | 1 | D-1744-02 | D-1744-03 | D-1744-02 | D-1744-03 | D-1744-03 | D-1744-03 | D-1744-04 | — |
| | 2 | D-1744-03 | D-1744-03 | D-1744-03 | D-1744-03 | D-1744-03 | D-1744-04 | D-1744-04 | — |
| 18 AWG | 1 | D-1744-02 | D-1744-03 | D-1744-03 | D-1744-03 | D-1744-03 | D-1744-03 | D-1744-03 | — |
| | 2 | D-1744-03 | D-1744-03 | D-1744-03 | D-1744-03 | D-1744-03 | D-1744-04 | D-1744-03 | — |
| 16 AWG | 1 | D-1744-03 | D-1744-03 | D-1744-03 | D-1744-03 | D-1744-03 | D-1744-04 | D-1744-03 | — |
| | 2 | D-1744-03 | D-1744-03 | D-1744-03 | D-1744-03 | D-1744-03 | D-1744-04 | D-1744-04 | — |
| 14 AWG | 1 | D-1744-03 | D-1744-03 | D-1744-03 | D-1744-03 | D-1744-03 | D-1744-04 | D-1744-03 | — |
| | 2 | D-1744-03 | D-1744-04 | D-1744-04 | D-1744-04 | D-1744-04 | — | — | — |
| 12 AWG | 1 | D-1744-03 | D-1744-03 | D-1744-03 | D-1744-04 | D-1744-03 | — | D-1744-04 | — |





Catalog 1654025
Revised 3-13

www.te.com

Dimensions are shown for reference purposes only. Specifications subject to change.

Dimensions are in millimeters unless otherwise specified.

USA: +1 800 522 6752
Asia Pacific: +86 0 400 820 6015
UK: +44 800 267 666

For additional support numbers please visit www.te.com

## SolderSleeve Wire Splices (Continued)

### CMA/mm² Calculation

To calculate the total circular mil or mm² area of the conductors to be terminated in a single splice, follow these steps:

1. Choose either CMA or mm² as your unit of measure for selection purposes and continue to use it for all your selection criteria.
2. In the workspace below, list the CMA or mm² for each conductor that will go into the same splice. (To assist you, Table D on this page provides the CMA of typical conductors.)
3. Add together the values listed in the workspace below to obtain the total area.
4. From Table E on the next page, select the part number recommended for the total CMA or mm² you have calculated.
5. Refer to the examples on this page for further clarification.

| Wire Number | CMA | mm² | |
|---|---|---|---|
| 1 | | | |
| 2 | | | |
| 3 | | | |
| 4 | | | |
| 5 | | | Part Number: |
| Total | | | |

### CMA/mm² Examples

**One-to-One Wire Splice**

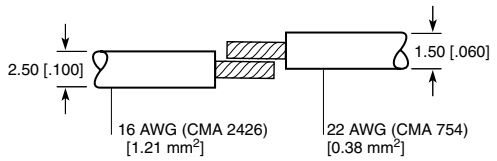


**Total CMA = 3180**
**Total mm² = 1.59**

Correct part number selection from Table E (based on CMA/mm² and nominal jacket wire OD) = B-155-9002, CWT-9002, D-110-41 or D-1744-02.

**Multiwire Splice**

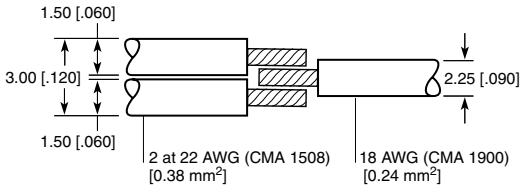


**Total CMA = 3408**
**Total mm² = 1.71**

Correct part number selection from Table E (based on CMA/mm² and nominal jacket wire OD) = B-155-9003, CWT-9003, D-110-0181 or D-1744-03.

**Table D.**

**CMA of Typical AWG Conductors**

| AWG | 28 | 26 | 24 | 22 | 20 | 18 | 16 | 14 | 12 |
|---|---|---|---|---|---|---|---|---|---|
| CMA | 177 | 304 | 475 | 754 | 1216 | 1900 | 2426 | 3831 | 5874 |
| mm² | 0.09 | 0.15 | 0.23 | 0.38 | 0.62 | 0.96 | 1.23 | 1.44 | 2.97 |



Catalog 1654025
Revised 3-13

www.te.com

Dimensions are shown for reference purposes only. Specifications subject to change.

Dimensions are in millimeters unless otherwise specified.

USA: +1 800 522 6752
Asia Pacific: +86 0 400 820 6015
UK: +44 800 267 666

For additional support numbers please visit www.te.com

## SolderSleeve Wire Splices (Continued)

### Installation Requirements

For proper installation of these devices the correct heating tool and reflector attachment must be used. Any one of the following TE heating tools is recommended:

- HL1910E/HL2010E
- IR-1759 MiniRay
- AA-400 Super Heater
- CV-1981

Refer to TE installation procedure RPIP-850-00 for D-1744 Series and RPIP- 824-00 for B-155 Series.

You will find ordering information for these tools in Section 10.

### Table E: Multiwire Splice Selection

| Product Series | Wire Jacket OD | | CMA Combined Total | | mm² Combined Total | |
|---|---|---|---|---|---|---|
| | Min. | Max. | Min. | Max. | Min. | Max. |
| B-155-9001 | 0.4 [0.015] | 1.7 [0.066] | 450 | 1500 | 0.3 | 0.8 |
| B-155-9002 | 1.3 [0.05] | 2.7 [0.106] | 1500 | 4000 | 0.8 | 2.0 |
| B-155-9003 | 1.8 [0.07] | 4.5 [0.18] | 4000 | 7800 | 2.0 | 4.0 |
| B-155-9004 | 2.8 [0.11] | 6.0 [0.236] | 7800 | 12000 | 4.0 | 6.0 |
| B-155-9005 | 3.2 [0.125] | 7.0 [0.275] | 12000 | 19000 | 6.0 | 10.0 |
| D-1744-01 | 0.50 [0.020] | 1.90 [0.075] | 350 | 2000 | – | – |
| D-1744-02 | 0.80 [0.031] | 2.80 [0.110] | 2000 | 4000 | – | – |
| D-1744-03 | 1.30 [0.050] | 4.57 [0.180] | 4000 | 10000 | – | – |
| D-1744-04 | 2.00 [0.080] | 7.11 [0.280] | 10000 | 13000 | – | – |
| D-110-35 | 0.51 [0.020] | 1.78 [0.070] | 500 | 1500 | – | – |
| D-110-41 | 1.27 [0.050] | 2.54 [1.00] | 1200 | 3500 | – | – |
| D-110-0181 | 1.9 [0.075] | 4.5 [0.177] | 3600 | 6000 | – | – |
| D-110-0101 | 2.41 [0.095] | 4.32 [0.17] | 4800 | 9000 | – | – |
| D-110-0090 | 3.56 [0.140] | 7.11 [0.28] | 8500 | 16200 | – | – |
| D-110-0083 | 4.0 [0.160] | 8.76 [0.345] | 16200 | 25000 | – | – |

### Product Characteristics

| | | |
|---|---|---|
| **Material** | | |
| Insulation (D-110, D-1744) | Radiation-crosslinked, heat-shrinkable polyvinylidene fluoride | |
| Insulation (B-155) | Radiation-crosslinked, heat-shrinkable polyolefin | |
| Solder and flux (D-110, D-1744) | Solder: Sn63 Pb37 | Flux: ROL1 per ANSI-J-004 (RMA flux) |
| Solder and flux (B-155) | Solder: Sn42Bi58 | Flux: ROM1 per ANSI-J-004 (RA Flux) |
| Solder and flux (CWT) | Solder: Sn50 Pb32 Cd18 | Flux: ROM1 per ASNI-J-004 (RA flux) |
| Meltable inserts (B-155, D-1744) | Meltable thermoplastic | |
| **Typical Performance** | | |
| Voltage drop | 2.0 mV | |
| Tensile strength | Exceeds strength of conductor | |
| Dielectric strength | 2.0 kV | |
| Temperature rating (B-155) | -55°C to +125°C [-67°F to +257°F] | |
| Temperature rating (D-110, D-1744) | -55°C to +150°C [-67°F to +302°F] | |
| Insulation resistance | 1000 megohms | |

### Specifications/Approvals

| Series | Agency | TE |
|---|---|---|
| B-155 | n/a | RT-1404 |
| CWT | UL E87681 | D-5023 |
| D-110 | UL E87681 | RT-1404 |
| D-1744 | NAS-1744 | RT-1404 |







Dimensions are shown for reference purposes only. Specifications subject to change.

Dimensions are in millimeters unless otherwise specified.

USA: +1 800 522 6752
Asia Pacific: +86 0 400 820 6015
UK: +44 800 267 666

For additional support numbers please visit www.te.com

## SolderGrip Closed End Connector Splices

### Product Facts

- Soldered connection
- Electrical insulation
- Sealed for immersion (SGRS-X-58, SGRS)
- Excellent strain relief
- Simple installation

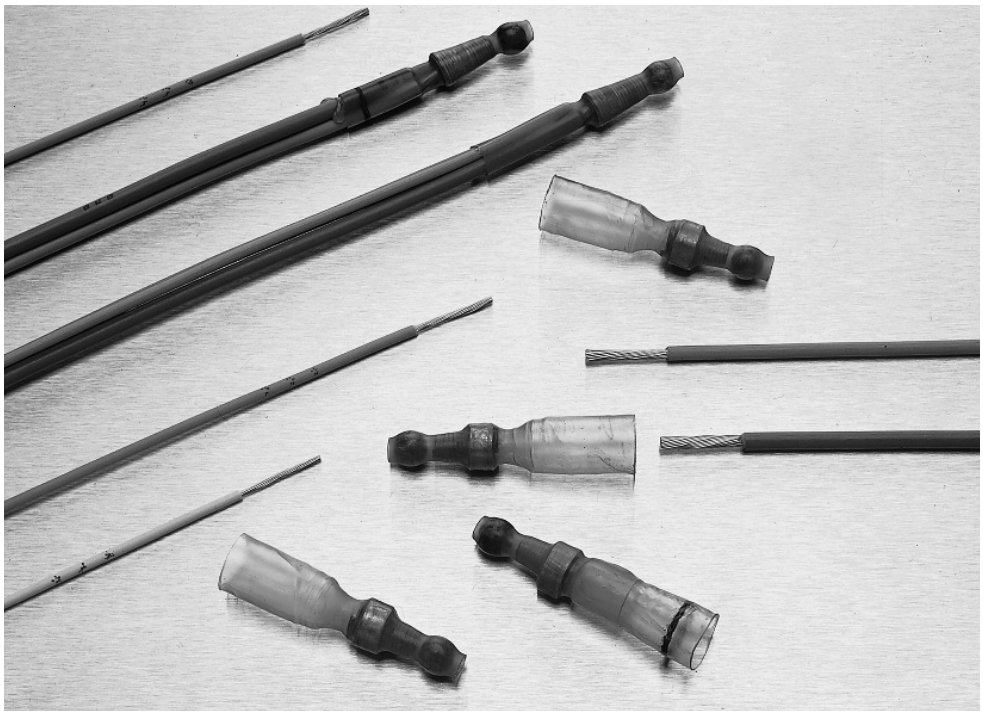

### Applications

SolderGrip heat-shrinkable solder-type closed-end connectors are designed for electrical termination of multiple-wire combinations. They provide a reliable alternative to crimping, welding, or conventional twist-on-style closed-end connectors.

Their unique combination of wire fixturing and controlled-soldering technology provides dependable electrical termination of multiple wire combinations.

SolderGrip terminators consist of a heat-shrinkable thermoplastic sleeve containing a spiral-wound copper insert. The insert is fitted with a prefluxed solder band.

This innovation design allows SolderGrip products to reliably terminate as many as 10 wires of different sizes and types in a single device.

The capability of SolderGrip terminators encompasses single or multi-stranded, bare or tinned copper wires with low- or high-temperature insulation.

The termination is environmentally protected and strain relieved.

SolderGrip splice terminators are color-coded for easy identification.

### Product Options

| Product Series | Environmental Protection | Max. Operating Temp. |
|---|---|---|
| SGRP | Splashproof | 125°C [257°F] |
| SGRS-X-58 | Sealed | 125˚C [257˚F] |
| SGRS | Sealed | 125°C [257°F] |

| Available in: | |
|---|---|
| Americas | ■ |
| Europe | ■ |
| Asia Pacific | ■ |



Catalog 1654025
Revised 3-13

www.te.com

Dimensions are shown for reference purposes only. Specifications subject to change.

Dimensions are in millimeters unless otherwise specified.

USA: +1 800 522 6752
Asia Pacific: +86 0 400 820 6015
UK: +44 800 267 666

For additional support numbers please visit www.te.com

## SolderGrip Closed End Connector Splices (Continued)

### Product Selection Process

1. From the Product Options table on the previous page, select the product series appropriate for your application.
2. Determine the wire combination (number of wires and size) of the wire bundle you wish to splice.
3. Use Table C (page 8-15) to select the correct connector for AWG wire combinations.*
   For mm² wire combinations use Table A to select a SolderGrip part number.

Example: For connecting a bundle with one 12 AWG wire (1 #12) and two 14 AWG wires (+2 #14), you need an SGRP-3 connector. For sealed parts, select the SGRS series.

*If the wire combination is not listed in Table C, use the CMA (mm²) method of determining wire bundle size (see "CMA/mm² Calculation" on page 8-14). Using Table B (page 8-14, select the smallest size connector that will fit your total wire CMA (mm²) value.

4. Verify that the wire bundle (with wire insulation) does not exceed the maximum diameter allowed for the connector you selected. Simply check the bundle's diameter against the maximum diameter that Table A (below) lists for that part.
5. Verify that the total amperage to be applied does not exceed the maximum amp rating for the part.

**Insulated Closed-End Connectors (SGRP series)**

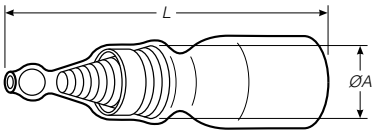


**Insulated and Sealed Closed-End Connectors (SGRS series)**

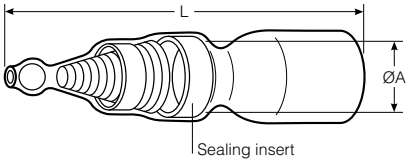


### Table A - Product Dimensions and Part Number Descriptions

| Part No. | Color Code | Product Dimensions (Min.) L | ØA | Wire Range (Min.-Max.) CMA/mm² |
|---|---|---|---|---|
| SGRP-1 | Green | 1.370 [34.8] | .120 [2.9] | 1400 - 4800 [0.7 - 2.4] |
| SGRP-2 | Red | 1.350 [34.2] | .150 [3.7] | 4000 - 8000 [2.0 - 4.0] |
| SGRP-3 | Blue | 1.610 [41.0] | .200 [5.1] | 7000 - 16000 [3.5 - 8.0] |
| SGRP-4 | Yellow | 1.650 [42.0] | .270 [6.8] | 15000 - 24000 [7.5 - 12.0] |

| Part No. | Color Code | Product Dimensions (Min.) L | ØA | Wire Range (Min.-Max.) CMA/mm² |
|---|---|---|---|---|
| SGRS-1 | Green | 1.370 [34.8] | 0.130 [3.4] | 1400 - 4800 [0.7 - 2.4] |
| SGRS-2 | Red | 1.350 [34.2] | 0.190 [4.8] | 4000 - 8000 [2.0 - 4.0] |
| SGRS-3 | Blue | 1.650 [42.0] | 0.290 [7.3] | 7000 - 16000 [3.5 - 8.0] |
| SGRS-4 | Yellow | 1.630 [41.5] | 0.360 [9.1] | 15000 - 24000 [7.5 - 12.0] |

| Part No. | Color Code | Product Dimensions (Min.) L | ØA | Wire Range (Min.-Max.) CMA/mm² |
|---|---|---|---|---|
| SGRS-1-58 | Green | 1.370 [34.8] | 0.130 [3.4] | 1400 - 4800 [0.7 - 2.4] |
| SGRS-2-58 | Red | 1.350 [34.2] | 0.190 [4.8] | 4000 - 8000 [2.0 - 4.0] |
| SGRS-3-58 | Blue | 1.650 [42.0] | 0.290 [7.3] | 7000 - 16000 [3.5 - 8.0] |
| SGRS-4-58 | Yellow | 1.630 [41.5] | 0.360 [9.1] | 15000 - 24000 [7.5 - 12.0] |





Catalog 1654025
Revised 3-13

www.te.com

Dimensions are shown for reference purposes only. Specifications subject to change.

Dimensions are in millimeters unless otherwise specified.

USA: +1 800 522 6752
Asia Pacific: +86 0 400 820 6015
UK: +44 800 267 666

For additional support numbers please visit www.te.com

## SolderGrip Closed End Connector Splices (Continued)

### CMA/mm² Calculation

To calculate the total circular mil or mm² area of the wire bundle to be terminated, follow these steps:

1. Choose either CMA or mm² as your unit of measure for selection purposes and continue to use it for all your selection criteria. (Both measures provide the same results.)
2. In the workspace below, list the CMA or mm² for each conductor in the bundle. (Table B provides the CMA of typical conductors.)
3. Add together the values listed in the workspace below to obtain the total area.
4. Use Table A to select the smallest terminator that will fit the total CMA (mm²).

| Wire Number | CMA | mm² | |
|---|---|---|---|
| 1 | | | |
| 2 | | | |
| 3 | | | |
| 4 | | | |
| 5 | | | |
| 6 | | | |
| 7 | | | |
| 8 | | | |
| 9 | | | |
| 10 | | | Solder Grip Part No. |
| Total | | | |

### CMA/mm² Example

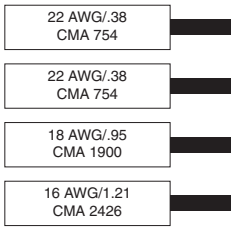


Total CMA = 5834
Total mm2 = 2.92
Correct part number (based on CMA of 5834 or mm² of 2.92): SGRP-2, SGRS-2 or SGRS-2-58

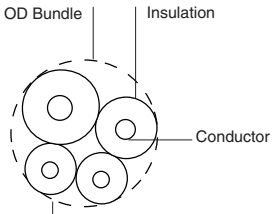


Bundle diameter must not exceed 6.0 mm (0.24 in) for SGRP-2 or 0.18 mm (4.5 in) for SGRS-2 or SGRS-2-58

### Table B. CMA of Typical Copper Conductors

| AWG | 30 | 28 | 26 | 24 | 22 | 20 | 18 | 16 | 14 | 12 | 10 | 8 |
|---|---|---|---|---|---|---|---|---|---|---|---|---|
| CMA | 112 | 177 | 304 | 475 | 754 | 1216 | 1900 | 2426 | 3831 | 5874 | 9354 | 16983 |
| mm² | 0.05 | 0.09 | 0.15 | 0.24 | 0.38 | 0.61 | 0.95 | 1.21 | 1.92 | 2.94 | 4.74 | 8.61 |



Catalog 1654025
Revised 3-13

www.te.com

Dimensions are shown for reference purposes only. Specifications subject to change.

Dimensions are in millimeters unless otherwise specified.

USA: +1 800 522 6752
Asia Pacific: +86 0 400 820 6015
UK: +44 800 267 666

For additional support numbers please visit www.te.com

## SolderGrip Closed End Connector Splices (Continued)

### Table C. SolderGrip Wire Combinations

| Wire Combinations | Splash-proof | Sealed |
|---|---|---|
| 1 # 8 + 1 # 12 | SGRP-4 | SGRS-4-58 |
| 1 # 8 + 1 # 16 | SGRP-4 | SGRS-4-58 |
| 2 # 8 + 2 # 16 | SGRP-4 | SGRS-4-58 |
| 1 # 8 + 1 # 14 | SGRP-4 | SGRS-4-58 |
| 1 # 8 + 1 # 14 + 1 # 16 | SGRP-4 | SGRS-4-58 |
| 1 # 10 + 1 # 18 | SGRP-3 | SGRS-3-58 |
| 1 # 10 + 2 # 18 | SGRP-3 | SGRS-3-58 |
| 1 # 10 + 3 # 18 | SGRP-3 | SGRS-3-58 |
| 1 # 10 + 1 # 16 | SGRP-3 | SGRS-3-58 |
| 1 # 10 + 1 # 16 + 1 # 18 | SGRP-3 | SGRS-3-58 |
| 1 # 10 + 1 # 16 + 2 # 18 | SGRP-3 | SGRS-3-58 |
| 1 # 10 + 2 # 16 | SGRP-3 | SGRS-3-58 |
| 1 # 10 + 3 # 16 | SGRP-4 | SGRS-4-58 |
| 1 # 10 + 4 # 16 | SGRP-4 | SGRS-4-58 |
| 1 # 10 + 5 # 16 | SGRP-4 | SGRS-4-58 |
| 1 # 10 + 1 # 14 | SGRP-3 | SGRS-3-58 |
| 1 # 10 + 1 # 14 + 1 # 18 | SGRP-3 | SGRS-3-58 |
| 1 # 10 + 1 # 14 + 1 # 16 | SGRP-3 | SGRS-3-58 |
| 1 # 10 + 1 # 14 + 2 # 16 | SGRP-3 | SGRS-3-58 |
| 1 # 10 + 1 # 14 + 3 # 16 | SGRP-4 | SGRS-4-58 |
| 1 # 10 + 2 # 14 | SGRP-4 | SGRS-4-58 |
| 1 # 10 + 3 # 14 | SGRP-4 | SGRS-4-58 |
| 1 # 10 + 1 # 12 | SGRP-3 | SGRS-3-58 |
| 1 # 10 + 1 # 12 + 1 # 14 | SGRP-4 | SGRS-4-58 |
| 1 # 10 + 2 # 12 | SGRP-4 | SGRS-4-58 |
| 2 # 10 | SGRP-4 | SGRS-4-58 |
| 2 # 10 + 1 # 16 | SGRP-4 | SGRS-4-58 |
| 1 # 12 + 1 # 18 | SGRP-2 | SGRS-2-58 |
| 1 # 12 + 2 # 18 | SGRP-3 | SGRS-3-58 |
| 1 # 12 + 3 # 18 | SGRP-3 | SGRS-3-58 |
| 1 # 12 + 4 # 18 | SGRP-3 | SGRS-3-58 |
| 1 # 12 + 5 # 18 | SGRP-3 | SGRS-3-58 |
| 1 # 12 + 1 # 16 | SGRP-3 | SGRS-3-58 |
| 1 # 12 + 1 # 16 + 1 # 18 | SGRP-3 | SGRS-3-58 |
| 1 # 12 + 1 # 16 + 2 # 18 | SGRP-3 | SGRS-3-58 |
| 1 # 12 + 1 # 16 + 3 # 18 | SGRP-3 | SGRS-3-58 |
| 1 # 12 + 1 # 16 + 4 # 18 | SGRP-4 | SGRS-4-58 |
| 1 # 12 + 2 # 16 | SGRP-3 | SGRS-3-58 |

| Wire Combinations | Splash-proof | Sealed |
|---|---|---|
| 1 # 14 + 3 # 20 | SGRP-2 | SGRS-2-58 |
| 1 # 14 + 4 # 20 | SGRP-3 | SGRS-3-58 |
| 1 # 14 + 1 # 18 | SGRP-2 | SGRS-2-58 |
| 1 # 14 + 1 # 18 + 1 # 20 | SGRP-2 | SGRS-2-58 |
| 1 # 14 + 2 # 18 | SGRP-2 | SGRS-2-58 |
| 1 # 14 + 3 # 18 | SGRP-3 | SGRS-3-58 |
| 1 # 14 + 4 # 18 | SGRP-3 | SGRS-3-58 |
| 1 # 14 + 5 # 18 | SGRP-3 | SGRS-3-58 |
| 1 # 14 + 1 # 16 | SGRP-2 | SGRS-3-58 |
| 1 # 14 + 1 # 16 + 1 # 20 | SGRP-2 | SGRS-2-58 |
| 1 # 14 + 1 # 16 + 1 # 18 | SGRP-3 | SGRS-3-58 |
| 1 # 14 + 1 # 16 + 2 # 18 | SGRP-3 | SGRS-3-58 |
| 1 # 14 + 1 # 16 + 3 # 18 | SGRP-3 | SGRS-3-58 |
| 1 # 14 + 1 # 16 + 4 # 18 | SGRP-3 | SGRS-3-58 |
| 1 # 14 + 2 # 16 | SGRP-3 | SGRS-3-58 |
| 1 # 14 + 2 # 16 + 1 # 18 | SGRP-3 | SGRS-3-58 |
| 1 # 14 + 2 # 16 + 2 # 18 | SGRP-3 | SGRS-3-58 |
| 1 # 14 + 2 # 16 + 3 # 18 | SGRP-3 | SGRS-3-58 |
| 1 # 14 + 3 # 16 | SGRP-3 | SGRS-3-58 |
| 1 # 14 + 3 # 16 + 1 # 18 | SGRP-3 | SGRS-3-58 |
| 1 # 14 + 3 # 16 + 2 # 18 | SGRP-3 | SGRS-3-58 |
| 1 # 14 + 4 # 16 | SGRP-3 | SGRS-3-58 |
| 1 # 14 + 4 # 16 + 1 # 18 | SGRP-3 | SGRS-3-58 |
| 1 # 14 + 5 # 16 | SGRP-3 | SGRS-3-58 |
| 2 # 14 | SGRP-2 | SGRS-2 -58 |
| 2 # 14 + 1 # 16 | SGRP-3 | SGRS-3-58 |
| 2 # 14 + 1 # 16 | SGRP-3 | SGRS-3-58 |
| 2 # 14 + 1 # 16 | SGRP-3 | SGRS-3-58 |
| 2 # 14 + 1 # 16 | SGRP-3 | SGRS-3-58 |
| 2 # 14 + 2 # 16 | SGRP-3 | SGRS-3-58 |
| 2 # 14 + 2 # 16 | SGRP-3 | SGRS-3-58 |
| 2 # 14 + 3 # 16 | SGRP-3 | SGRS-3-58 |
| 2 # 14 + 4 # 16 | SGRP-4 | SGRS-4-58 |
| 3 # 14 | SGRP-3 | SGRS-3-58 |
| 3 # 14 + 1 # 16 | SGRP-3 | SGRS-3-58 |
| 3 # 14 + 2 # 16 | SGRP-4 | SGRS-4-58 |
| 3 # 14 + 3 # 16 | SGRP-4 | SGRS-4-58 |
| 4 # 14 | SGRP-3 | SGRS-3-58 |

| Wire Combinations | Splash-proof | Sealed |
|---|---|---|
| 2 # 16 + 1 # 18 + 3 # 20 | SGRP-3 | SGRS-3-58 |
| 2 # 16 + 1 # 18 + 2 # 20 | SGRP-3 | SGRS-3-58 |
| 2 # 16 + 1 # 18 + 1 # 20 | SGRP-2 | SGRS-2-58 |
| 2 # 16 + 1 # 18 | SGRP-2 | SGRS-2-58 |
| 2 # 16 + 4 # 20 | SGRP-3 | SGRS-3-58 |
| 2 # 16 + 3 # 20 | SGRP-3 | SGRS-3-58 |
| 2 # 16 + 2 # 20 | SGRP-2 | SGRS-2-58 |
| 2 # 16 + 1 # 20 | SGRP-2 | SGRS-2-58 |
| 2 # 16 | SGRP-2 | SGRS-2-58 |
| 1 # 16 + 5 # 18 | SGRP-3 | SGRS-3-58 |
| 1 # 16 + 4 # 18 + 1 # 20 | SGRP-3 | SGRS-3-58 |
| 1 # 16 + 4 # 18 | SGRP-3 | SGRS-3-58 |
| 1 # 16 + 3 # 18 + 2 # 20 | SGRP-3 | SGRS-3-58 |
| 1 # 16 + 3 # 18 + 1 # 20 | SGRP-3 | SGRS-3-58 |
| 1 # 16 + 2 # 18 + 3 # 20 | SGRP-3 | SGRS-3-58 |
| 1 # 16 + 2 # 18 + 1 # 20 | SGRP-2 | SGRS-2 -58 |
| 1 # 16 + 2 # 18 | SGRP-2 | SGRS-2-58 |
| 1 # 16 + 1 # 18 + 4 # 20 | SGRP-3 | SGRS-3-58 |
| 1 # 16 + 1 # 18 + 3 # 20 | SGRP-2 | SGRS-2-58 |
| 1 # 16 + 1 # 18 + 2 # 20 | SGRP-2 | SGRS-2 -58 |
| 1 # 16 + 1 # 18 + 1 # 20 | SGRP-2 | SGRS-2-58 |
| 1 # 16 + 1 # 18 | SGRP-1 | SGRS-1-58 |
| 1 # 16 + 4 # 20 | SGRP-2 | SGRS-2-58 |
| 1 # 16 + 3 # 20 | SGRP-2 | SGRS-2-58 |
| 1 # 16 + 1 # 20 + 1 # 22 | SGRP-1 | SGRS-1-58 |
| 1 # 16 + 1 # 20 | SGRP-1 | SGRS-1-58 |
| 1 # 16 + 3 # 22 | SGRP-1 | SGRS-1-58 |
| 1 # 16 + 2 # 22 | SGRP-1 | SGRS-1-58 |
| 1 # 16 + 1 # 22 | SGRP-1 | SGRS-1-58 |
| 1 # 18 + 1 # 22 | SGRP-1 | SGRS-1-58 |
| 1 # 18 + 2 # 22 | SGRP-1 | SGRS-1-58 |
| 1 # 18 + 3 # 22 | SGRP-1 | SGRS-1-58 |
| 1 # 18 + 1 # 20 | SGRP-1 | SGRS-1-58 |
| 1 # 18 + 1 # 20 + 1 # 22 | SGRP-1 | SGRS-1-58 |
| 1 # 18 + 1 # 20 + 2 # 22 | SGRP-1 | SGRS-1-58 |
| 1 # 18 + 2 # 20 | SGRP-1 | SGRS-1-58 |
| 1 # 18 + 3 # 20 | SGRP-2 | SGRS-2-58 |
| 1 # 18 + 4 # 20 | SGRP-2 | SGRS-2-58 |







Dimensions are shown for reference purposes only. Specifications subject to change.

Dimensions are in millimeters unless otherwise specified.

USA: +1 800 522 6752
Asia Pacific: +86 0 400 820 6015
UK: +44 800 267 666

For additional support numbers please visit www.te.com

## SolderGrip Closed End Connector Splices (Continued)

### Table C. SolderGrip Wire Combinations (Continued)

| Wire Combinations | Splash-proof | Sealed |
|---|---|---|
| 1 # 12 + 2 # 16 + 1 # 18 | SGRP-3 | SGRS-3-58 |
| 1 # 12 + 2 # 16 + 2 # 18 | SGRP-3 | SGRS-3-58 |
| 1 # 12 + 3 # 16 | SGRP-3 | SGRS-3-58 |
| 1 # 12 + 4 # 16 | SGRP-3 | SGRS-3-58 |
| 1 # 12 + 5 # 16 | SGRP-4 | SGRS-4-58 |
| 1 # 12 + 1 # 14 + 1 # 18 | SGRP-3 | SGRS-3-58 |
| 1 # 12 + 1 # 14 + 2 # 18 | SGRP-3 | SGRS-3-58 |
| 1 # 12 + 1 # 14 + 3 # 18 | SGRP-3 | SGRS-3-58 |
| 1 # 12 + 1 # 14 + 1 # 16 | SGRP-3 | SGRS-3-58 |
| 1 # 12 + 1 # 14 + 2 # 16 | SGRP-3 | SGRS-3-58 |
| 1 # 12 + 1 # 14 + 3 # 16 | SGRP-4 | SGRS-4-58 |
| 1 # 12 + 1 # 14 + 4 # 16 | SGRP-4 | SGRS-4-58 |
| 1 # 12 + 2 # 14 | SGRP-3 | SGRS-3-58 |
| 1 # 12 + 2 # 14 + 1 # 18 | SGRP-3 | SGRS-3-58 |
| 1 # 12 + 2 # 14 + 1 # 16 | SGRP-4 | SGRS-4-58 |
| 1 # 12 + 2 # 14 + 2 # 16 | SGRP-4 | SGRS-4-58 |
| 1 # 12 + 2 # 14 + 3 # 16 | SGRP-4 | SGRS-4-58 |
| 1 # 12 + 3 # 14 | SGRP-4 | SGRS-4-58 |
| 1 # 12 + 3 # 14 + 1 # 16 | SGRP-4 | SGRS-4-58 |
| 1 # 12 + 4 # 14 | SGRP-4 | SGRS-4-58 |
| 2 # 12 | SGRP-4 | SGRS-4-58 |
| 2 # 12 + 1 # 18 | SGRP-3 | SGRS-3-58 |
| 2 # 12 + 1 # 18 | SGRP-3 | SGRS-3-58 |
| 2 # 12 + 1 # 16 | SGRP-3 | SGRS-3-58 |
| 2 # 12 + 2 # 16 + 1 # 18 | SGRP-4 | SGRS-4-58 |
| 2 # 12 + 3 # 16 | SGRP-4 | SGRS-4-58 |
| 2 # 12 + 1 # 14 + 1 # 18 | SGRP-4 | SGRS-4-58 |
| 2 # 12 + 1 # 14 + 1 # 16 | SGRP-4 | SGRS-4-58 |
| 3 # 12 + 1 # 14 | SGRP-4 | SGRS-4-58 |
| 2 # 12 + 2 # 14 | SGRP-4 | SGRS-4-58 |
| 3 # 12 + 1 # 18 | SGRP-4 | SGRS-4-58 |
| 3 # 12 + 1 # 16 | SGRP-4 | SGRS-4-58 |
| 1 # 14 + 1 # 22 | SGRP-1 | SGRS-1-58 |
| 1 # 14 + 1 # 20 | SGRP-2 | SGRS-2-58 |
| 1 # 14 + 2 # 20 | SGRP-2 | SGRS-2-58 |

| Wire Combinations | Splash-proof | Sealed |
|---|---|---|
| 4 # 14 + 1 # 16 | SGRP-4 | SGRS-4-58 |
| 4 # 14 + 2 # 16 | SGRP-4 | SGRS-4-58 |
| 5 # 14 | SGRP-4 | SGRS-4-58 |
| 5 # 14 + 1 # 16 | SGRP-4 | SGRS-4-58 |
| 1 # 16 + 3 # 18 | SGRP-3 | SGRS-3-58 |
| 1 # 16 + 2 # 18 + 2 # 20 | SGRP-3 | SGRS-3-58 |
| 1 # 16 + 5 # 20 | SGRP-3 | SGRS-3-58 |
| 1 # 16 + 2 # 20 | SGRP-2 | SGRS-2-58 |
| 6 # 16 | SGRP-3 | SGRS-3-58 |
| 5 # 16 + 1 # 18 | SGRP-3 | SGRS-3-58 |
| 5 # 16 + 1 # 20 | SGRP-3 | SGRS-3-58 |
| 5 # 16 | SGRP-3 | SGRS-3-58 |
| 4 # 16 + 2 # 18 | SGRP-3 | SGRS-3-58 |
| 4 # 16 + 1 # 18 + 1 # 20 | SGRP-3 | SGRS-3-58 |
| 4 # 16 + 1 # 18 | SGRP-3 | SGRS-3-58 |
| 4 # 16 + 2 # 20 | SGRP-3 | SGRS-3-58 |
| 4 # 16 + 1 # 20 | SGRP-3 | SGRS-3-58 |
| 4 # 16 | SGRP-3 | SGRS-3-58 |
| 3 # 16 + 3 # 18 | SGRP-3 | SGRS-3-58 |
| 3 # 16 + 2 # 18 + 1 # 20 | SGRP-3 | SGRS-3-58 |
| 3 # 16 + 2 # 18 | SGRP-3 | SGRS-3-58 |
| 3 # 16 + 1 # 18 + 2 # 20 | SGRP-3 | SGRS-3-58 |
| 3 # 16 + 1 # 18 + 1 # 20 | SGRP-3 | SGRS-3-58 |
| 3 # 16 + 1 # 18 | SGRP-3 | SGRS-3-58 |
| 3 # 16 + 3 # 20 | SGRP-3 | SGRS-3-58 |
| 3 # 16 + 2 # 20 | SGRP-3 | SGRS-3-58 |
| 3 # 16 + 1 # 20 | SGRP-3 | SGRS-3-58 |
| 3 # 16 | SGRP-2 | SGRS-2-58 |
| 2 # 16 + 4 # 18 | SGRP-3 | SGRS-3-58 |
| 2 # 16 + 3 # 18 + 1 # 20 | SGRP-3 | SGRS-3-58 |
| 2 # 16 + 3 # 18 | SGRP-3 | SGRS-3-58 |
| 2 # 16 + 2 # 18 + 2 # 20 | SGRP-3 | SGRS-3-58 |
| 2 # 16 + 2 # 18 + 1 # 20 | SGRP-3 | SGRS-3-58 |
| 2 # 16 + 2 # 18 | SGRP-3 | SGRS-3-58 |
| — | — | — |

| Wire Combinations | Splash-proof | Sealed |
|---|---|---|
| 1 # 18 + 5 # 20 | SGRP-2 | SGRS-2-58 |
| 2 # 18 | SGRP-1 | SGRS-1-58 |
| 2 # 18 + 1 # 22 | SGRP-1 | SGRS-1-58 |
| 2 # 18 + 1 # 20 | SGRP-2 | SGRS-2-58 |
| 2 # 18 + 2 # 20 | SGRP-2 | SGRS-2-58 |
| 2 # 18 + 3 # 20 | SGRP-2 | SGRS-2-58 |
| 2 # 18 + 4 # 20 | SGRP-3 | SGRS-3-58 |
| 3 # 18 | SGRP-2 | SGRS-2-58 |
| 3 # 18 + 1 # 20 | SGRP-2 | SGRS-2-58 |
| 3 # 18 + 2 # 20 | SGRP-3 | SGRS-3-58 |
| 3 # 18 + 3 # 20 | SGRP-3 | SGRS-3-58 |
| 4 # 18 | SGRP-2 | SGRS-2-58 |
| 4 # 18 + 1 # 20 | SGRP-3 | SGRS-3-58 |
| 4 # 18 + 2 # 20 | SGRP-3 | SGRS-3-58 |
| 5 # 18 | SGRP-3 | SGRS-3-58 |
| 5 # 18 + 1 # 20 | SGRP-3 | SGRS-3-58 |
| 6 # 18 | SGRP-3 | SGRS-3-58 |
| 1 # 20 + 1 # 22 | SGRP-1 | SGRS-1-58 |
| 1 # 20 + 2 # 22 | SGRP-1 | SGRS-1-58 |
| 1 # 20 + 3 # 22 | SGRP-1 | SGRS-1-58 |
| 1 # 20 + 4 # 22 | SGRP-1 | SGRS-1-58 |
| 2 # 20 | SGRP-1 | SGRS-1-58 |
| 2 # 20 + 1 # 22 | SGRP-1 | SGRS-1-58 |
| 2 # 20 + 2 # 22 | SGRP-1 | SGRS-1-58 |
| 2 # 20 + 3 # 22 | SGRP-1 | SGRS-1-58 |
| 3 # 20 | SGRP-1 | SGRS-1-58 |
| 3 # 20 + 1 # 22 | SGRP-1 | SGRS-1-58 |
| 4 # 20 | SGRP-2 | SGRS-2-58 |
| 5 # 20 | SGRP-2 | SGRS-2-58 |
| 6 # 20 | SGRP-2 | SGRS-2-58 |
| 3 # 22 | SGRP-1 | SGRS-1-58 |
| 4 # 22 | SGRP-1 | SGRS-1-58 |
| 5 # 22 | SGRP-1 | SGRS-1-58 |
| 6 # 22 | SGRP-1 | SGRS-1-58 |
| — | — | — |



Catalog 1654025
Revised 3-13

www.te.com

Dimensions are shown for reference purposes only. Specifications subject to change.

Dimensions are in millimeters unless otherwise specified.

USA: +1 800 522 6752
Asia Pacific: +86 0 400 820 6015
UK: +44 800 267 666

For additional support numbers please visit www.te.com

## SolderGrip Closed End Connector Splices (Continued)

### Product Characteristics

| Material | | | |
|---|---|---|---|
| Insulation | Radiation-crosslinked, transparent heat-shrinkable polyvinylidene fluoride | | |
| Solder preform with flux (SGRS-X-58) | SN42Bi58, ROM1 flux per ANSI-J-STD-004 (RA flux). | | |
| Solder preform with flux (SGRP, SGRS) | Sn 60 Pb 40, ROM1 flux per ANSI-J-STD-004 (RA flux). | | |
| Sealing insert (SGRS-X-58, SGRS) | Hot melt adhesive | | |
| Spiral wound insert | Copper alloy | | |
| **Physical** | **Unit** | **Method of test** | **Requirement** |
| Dimensions | inches | RB-109 | See product dimensions. |
| **Electromechanical** | **Unit** | **Method of test** | **Typical values** |
| Dielectric withstand voltage | kilovolts | RB-109 | 2.0 |
| Static heating | degrees | RB-109 | Less than 50°C rise |
| **Environmental*** | **Unit** | **Method of test** | **Requirement** |
| Insulation resistance after water immersion (SGRS only) | megohms | RB-109 | 100 |
| Contact resistance after testing | milliohms | RB-109 | Less than 6 milliohms |
| **Operating condition** | **Unit** | **Method of test** | **Value** |
| Temperature rating | — | — | -55°C to 125°C [-67°F to 257°F] |
| Voltage rating | volts | — | 600 |

*Immersion resistance sealing is dependent on the wire combinations used. The user should test specific wire combinations. Refer to RB-109 TE specification for procedures.

### Approvals and Reference Documents

| | |
|---|---|
| Agency Approvals | UL, CUL E87681 |
| Reference documents | TE Specification RB-109 for splices<br>Specification Control Drawings<br>Splices—Non Sealed (SGRP-X), Splices—Sealed (SGRS-X) |

Note: SGRS-X-58 is not UL approved.

### Installation

The SolderGrip product is pushed onto the conductors with a twisting motion. With the product in place, installation can be completed with the proper selection and use of heating tools and reflectors.

Either of the following TE heating tools is recommended:

- HL1910E/HL2010E
- CV-1981

Refer to TE installation procedure RPIP-820-00 for detailed instructions and recommended reflector attachments.

You will find ordering information for these tools in Section 10.







Dimensions are shown for reference purposes only. Specifications subject to change.

Dimensions are in millimeters unless otherwise specified.

USA: +1 800 522 6752
Asia Pacific: +86 0 400 820 6015
UK: +44 800 267 666

For additional support numbers please visit www.te.com

## DuraSeal Heat-Shrinkable, Environmentally Sealed, Nylon-Insulated Crimp Splices

### Product Facts

- Protects splices from water, condensation, salt, and corrosion
- Provides strain relief
- Protects against vibration in rugged environments
- Completely insulates and protects electrical connections
- Has adhesive lining for protection that is more reliable than conventional splices
- UL, CUL, and Lloyd's listed

### Applications

- Automotive/truck wiring repair and maintenance.
- Automotive accessory installations.
- OEM automotive/truck/RV wire harness fabrication.
- Marine electronics.
- Fleet maintenance.
- Commercial wiring (pumps/pools/spas).
- Appliances.

### Specifications/Approvals

| Series | Agency | TE |
|---|---|---|
| D-406 | UL and CUL listed 91J4, File E87681 | RB-107 |
| — | Lloyd's listed, File 65 247 HH 02-93 | — |

Note: D406-0034 is not UL approved.

### Product Dimensions

#### Butt Splices

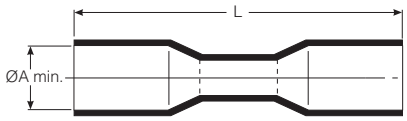


| Part No. | Butt Splice Dimensions A Min. | Butt Splice Dimensions L Nom. | Color | Conductor | Wire Dimensions Insulation O.D. (Max.) | Wire Dimensions Insulation O.D. (Min.) |
|---|---|---|---|---|---|---|
| D-406-0034 | 3.00 [.118] | 31.5 [1.24] | Yellow | 26-24 | 3.00 [.118] | 1.40 [.055] |
| D-406-0001 | 3.70 [.146] | 31.5 [1.24] | Red | 22–18 | 3.70 [.146] | 1.40 [.055] |
| D-406-0002 | 4.60 [.181] | 31.5 [1.24] | Blue | 16–14 | 4.60 [.181] | 2.00 [.080] |
| D-406-0003 | 6.50 [.255] | 37.5 [1.48] | Yellow | 12–10 | 6.50 [.255] | 2.80 [.110] |

| Available in: | |
|---|---|
| Americas | ■ |
| Europe | ■ |
| Asia Pacific | ■ |



Catalog 1654025
Revised 3-13

www.te.com

Dimensions are shown for reference purposes only. Specifications subject to change.

Dimensions are in millimeters unless otherwise specified.

USA: +1 800 522 6752
Asia Pacific: +86 0 400 820 6015
UK: +44 800 267 666

For additional support numbers please visit www.te.com

## DuraSeal Heat-Shrinkable, Environmentally Sealed, Nylon-Insulated Crimp Splices (Continued)

### Product Selection Process

1. Determine wire size.
2. Select part number.

| Wire Size AWG | mm² | Part No. | Color |
|---|---|---|---|
| 26-24 | 0.15-0.25 | D-406-0034 | Yellow |
| 22–18 | 0.5-1.0 | D-406-0001 | Red |
| 16–14 | 1.2–2.5 | D-406-0002 | Blue |
| 12–10 | 3–6 | D-406-0003 | Yellow |

### Product Characteristics (Typical)

| | |
|---|---|
| Operating temperature | -55°C to 125°C [-67°F to 257°F] |
| Shrink ratio | Approximately 2:1 |
| Physical properties | Cut-through resistance: 31 kg [70 lb]<br>Wire pullout after crimping and recovery: red: 11.3 kg [25 lb]; blue: 22.7 kg [50 lb]; yellow: 27.2 kg [60 lb]<br>Not flame-retardant<br>No cracking after heat aging for 168 h at 160°C [320°F] |
| Chemical properties | Solvent resistance: isopropyl alcohol, trichloroethylene, gasoline, battery acid, diesel fuel, motor oil, antifreeze, brake fluid, 5% salt water |
| Electrical properties | Dielectric strength: 2500 Vac<br>Insulation resistance: 1000 megohms at 100 Vdc |

### Installation Requirements

For proper installation of these devices, the correct crimp tool and a heating tool with a reflector attachment must be used. The AD-1522 crimp tool and HL1910E/ HL2010E heating tool are recommended.

You will find ordering information for these tools in Section 10.

Refer to TE installation procedure RPIP-821-00 for detailed instructions.

### Installation

1. Select splice of appropriate size. Strip wire 7.5 mm (5/16 in). Insert into crimp barrel.

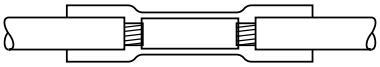

2. Crimp using AD-1522 crimp tool for preinsulated crimps.

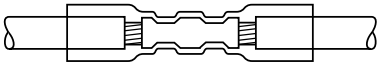

3. Heat crimped splice with heat gun until tubing recovers and adhesive flows.

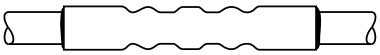







Dimensions are shown for reference purposes only. Specifications subject to change.

Dimensions are in millimeters unless otherwise specified.

USA: +1 800 522 6752
Asia Pacific: +86 0 400 820 6015
UK: +44 800 267 666

For additional support numbers please visit www.te.com

## PolyCrimp Heat-Shrinkable Polyethylene Crimp Splices

### Product Facts

- **One-piece product reduces inventory management**
- **Translucent tubing allows visual inspection**
- **Color coded for easy selection of correct AWG**
- **Dual wall polyethylene tubing provides strain relief and protection against environment**

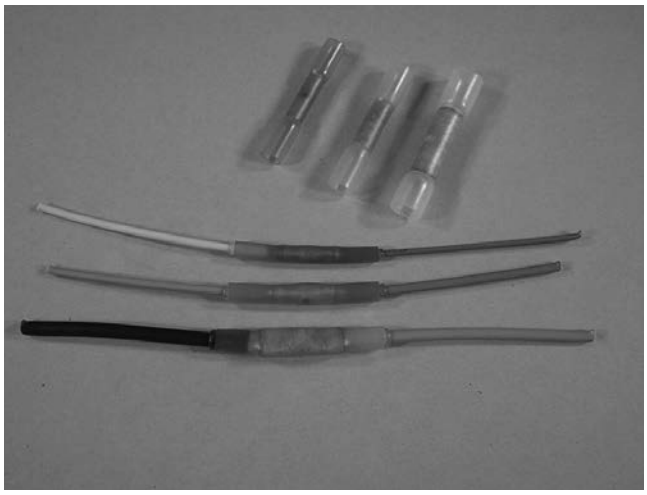

### Applications

- Alarms.
- Marine electronics.
- Mass transit signal wire.
- Telecom aerial splices.
- Traffic light junction boxes.
- Commercial wiring (pumps).
- Heavy industrial environments.

### Specifications/Approvals

| Series | TE |
|---|---|
| C203 | D-5203 |

### Product Dimensions

**Butt Splices**

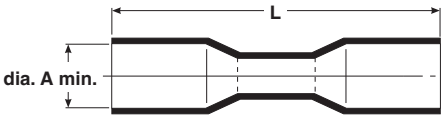


| Part No. | Butt Splice Dimensions A Min. | Butt Splice Dimensions L Nom. | Color | Conductor | Wire Dimensions Insulation O.D. (Max.) | Wire Dimensions Insulation O.D. (Min.) |
|---|---|---|---|---|---|---|
| C-203-01 | 3.68 [.145] | 31.75 [1.25] | Red | 22–18 | 3.56 [.140] | 1.40 [.055] |
| C-203-02 | 4.57 [.180] | 31.75 [1.25] | Blue | 16–14 | 4.45 [.175] | 2.03 [.080] |
| C-203-03 | 6.35 [.250] | 38.10 [1.50] | Yellow | 12–10 | 6.22 [.245] | — |

| Available in: | |
|---|---|
| Americas | ■ |
| Europe | ■ |
| Asia Pacific | ■ |



Dimensions are shown for reference purposes only. Specifications subject to change.

Dimensions are in millimeters unless otherwise specified.

USA: +1 800 522 6752
Asia Pacific: +86 0 400 820 6015
UK: +44 800 267 666

For additional support numbers please visit www.te.com

## PolyCrimp Heat-Shrinkable Polyethylene Crimp Splices (Continued)

### Product Selection Process

1. Determine wire size.
2. Select part number.

| Wire Size AWG | mm² | Part No. | Color |
|---|---|---|---|
| 22–18 | 0.38–0.95 | C-203-01 | Red |
| 16–14 | 1.2–2.5 | C-203-02 | Blue |
| 12–10 | 3–6 | C-203-03 | Yellow |

### Product Characteristics (Typical)

| | |
|---|---|
| Operating temperature | -55°C to 125°C [-67°F to 257°F] |
| Shrink ratio | Approximately 2:1 |
| Physical properties | Wire pullout after crimping and recovery: red: 6.8 kg [15 lb]; blue: 18.14 kg [40 lb]; yellow: 22.7 kg [50 lb] |
| Chemical properties | Meets electrical test after conditioning in diesel fuel, brake fluid, ASTM fuel C and engine degreaser. |
| Electrical properties | Dielectric strength: 2500 Vac<br>Insulation resistance: 1000 megohms at 100 Vdc<br>Voltage rating: 600 Volts max. |





Catalog 1654025
Revised 3-13

www.te.com

Dimensions are shown for reference purposes only. Specifications subject to change.

Dimensions are in millimeters unless otherwise specified.

USA: +1 800 522 6752
Asia Pacific: +86 0 400 820 6015
UK: +44 800 267 666

For additional support numbers please visit www.te.com

## Cold Applied Splices

The cold applied splice product line is designed as a single component in-line splice to provide high environmental protection to seal the termination from moisture and provide electrical isolation. If moisture is present, it can lead to insulation failure and breakdown of the electrical connection.

In this product, sealing is achieved by replacing traditional methods, such as grommets, greases and tapes with a novel TE gel technology. The electrical isolation is provided by a polymer outer layer.

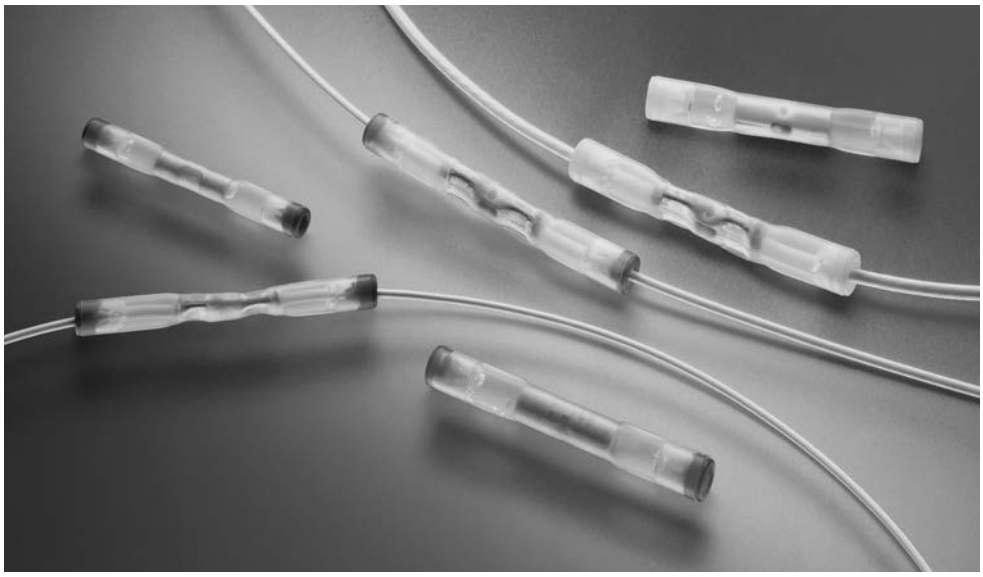

### Product Facts

- **One-step termination and environmental protection**
- **No heating required for installation — safe for use on fueled aircraft**
- **Reliable in a wide variety of environmental conditions**
- **Achieve environmental performance while maintaining:**
  - **Small profile**
  - **Electrical performance**
- **Easy installation and application flexibility**
- **Prevents water ingress under permanent pressure/weight**

### Applications

Ideal for aerospace and defense application where performance and reliability is essential

Designed to provide an immersion resistant in-line splice on 1:1 wires

- Wide range from 26 AWG to 12 AWG
- Nickel-plated, silver-plated, and tin-plated conductors

Protects and seals on all conventional MIL spec and commercial wire insulation systems

### Standards & Specs

Meets or exceeds the following:

- SAE-AMS-DTL-23053/8 (Insulation sleeve)
- SAE-AS81824/12

Under qualification for SAE AS81824 and AS81824/12

### Ordering Information

Minimum order quantity: 500 pieces for all sizes

### Environmental

Temperature range: -65˚C to 150˚C

Dielectric strength: 2,500 V Maximum

Insulation resistance: 5,000 Mega-ohms minimum

Altitude immersion: 75,000 ft.

Fluid resistance: MIL-L-7808, MIL-L-23699, MIL-PRF-5605 (Hydraulic), MIL-A-8243, MIL-C-25769, and MIL-T-5624 (JP-5)

### Electrical

Current rating as defined by the size of crimp, guage of wire and specification

### Mechanical

Cold splice tensile strenth exceeds strength of spliced wire

### Physical or Other Properties

Cross-linked gel technology:

- Proven gel sealing system
- Versatile gel closure
- Non-flowing gel

### Materials

Insulation sleeve: Transparent polyvinylidene fluoride

Metal crimp splice: Tin plated copper

End caps: Thermoplastic, color coded

Gel: Clear flame-retardant silicone based gel

### Application Tooling

Cold Applied Crimp Tool: AD-1381

Under qualification per M22520/44-01

AD-1381 or approved M22520/44-01 crimp tool **must be** used for proper installation of these devices

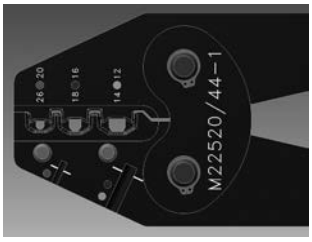


AD-1381 Tool



Catalog 1654025
Revised 3-13

www.te.com

Dimensions are shown for reference purposes only. Specifications subject to change.

Dimensions are in millimeters unless otherwise specified.

USA: +1 800 522 6752
Asia Pacific: +86 0 400 820 6015
UK: +44 800 267 666

For additional support numbers please visit www.te.com

## Cold Applied Splices (Continued)

### Part Numbers

| Part Number | Wire Range | L±1.0 [±0.040] | øA±0.5 [±0.020) | øB±0.25 [±0.010] | øC±0.5 [±0.020] | E±0.25 [±0.010] | J±0.25 [±0.010] | End Cap Color Code (Both Ends) |
|---|---|---|---|---|---|---|---|---|
| D-436-36-COLD | 26-24-22-20 | 36.8 [1.450] | 4.2 [0.165) | 2.0 [0.080] | 3.7 [0.145] | 12.1 [0.475] | 12.7 [0.500] | Red |
| D-436-37-COLD | 18-16 | 38.7 [1.525] | 5.1 [0.200) | 2.9 [0.115] | 4.5 [0.175] | 14.3 [0.565] | 12.7 [0.500] | Blue |
| D-436-38-COLD | 14-12 | 38.7 [1.525] | 5.9 [0.235] | 3.8 [0.150] | 5.2 [0.205] | 14.3 [0.565] | 12.7 [0.500] | Yellow |

Dimensions are in inches.

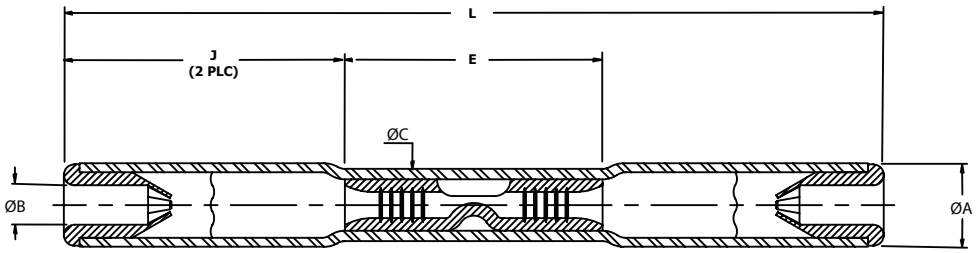

## MiniSeal High-Performance, Immersion-Resistant Crimp Splices

### Product Facts

- **Immersion-resistant crimp splices are on QPL for SAE-AS-81824**
- **MIL-Spec approval**
- **Small size**
- **Light weight**
- **Insulation and strain relief**
- **Easy installation**

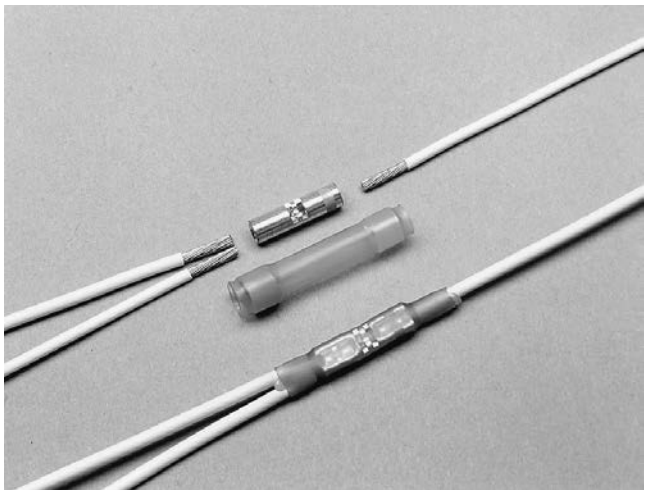

### Applications

MiniSeal wire-to-wire splicing products offer solutions for hundreds of aerospace and defense applications. These environment-resistant splices provide excellent reliability, long term performance, MIL-S-81824/1 qualification, and a low installed cost.

MiniSeal crimp splices consist of a plated copper crimp barrel and a separate, heat-shrinkable, transparent sealing sleeve. They can be used on a combination of wires, from 1:1 to 10:10. MiniSeal splices are one of the smallest, lightest, and most environment-resistant splices available. They preserve the electrical integrity of the splice by preventing the penetration of liquids and the resulting chemical and galvanic corrosion.

| Available in: | |
|---|---|
| Americas | ■ |
| Europe | ■ |
| Asia Pacific | ■ |

### Product Selection Process

1. Determine the type of splice required.
   - Stub (parallel) splice:

   - Butt (in-line) splice:

     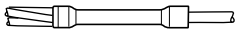

2. Determine which crimp barrel plating is required:
   - Tin plating, recommended for tin or silverplated wire
   - Nickel plating, recommended for nickel-plated wire, or silver-plated wire in applications above 150°C [302°F].
3. Calculate the size of crimp barrel required.

   Using the CMA/mm$^2$ worksheet on the next page, calculate the total cross section to be spliced by adding the circular mil area (CMA) or square millimeters (mm$^2$) of each wire.

   Stub splice: Add the CMA or mm$^2$ of all wires together.

   Butt splice: Calculate each side separately (see example on the worksheet).

   Table A provides the CMA of typical conductors. (Both CMA and mm$^2$ give the same results, so choose either CMA or mm$^2$ as your unit of measure for selection purposes and continue to use it for all your selection criteria.)
4. Select the color code for the size crimp barrel required. Using Table B (page 8-23), select the crimp barrel—color-coded red, blue, or yellow—for the CMA or mm$^2$ you calculated.

   *Stub splice:* Select the barrel that will accommodate the total cross section.

   *Butt splice:* Select the smallest barrel that will accommodate the largest CMA/mm$^2$ required. (Refer to the example in the worksheet for a more specific description.) If the CMA/mm$^2$ of the smaller side of a butt splice is too small for the size barrel required to fit the larger side, increase the CMA/mm$^2$ —either by doubling back one wire (stripping the conductor twice the length you would ordinarily strip it and then folding it back) or by adding a filler wire.
5. Determine the type of sealing sleeve required. Some wire insulations will not fit in the holes of the sealing sleeve inserts, so be sure to compare the internal diameter of each hole with the outer diameter of the wire(s) you intend to insert in that hole. To create a reliable seal, place a maximum of two wires in any hole of the sealing sleeve.
6. Select the part number. Turn to the MiniSeal part number selection tables (Tables C and D, page 8-23 and 8-24) and find the table for the type of splice (stub or butt) required.

   Using the appropriate table, find the crimp barrel size range and the size and number of wires for your application. Then select the part number for the type of plating required. The color code accompanying that part number should match the color code you arrived at in Table B, confirming that the part number you have selected is correct.



Catalog 1654025
Revised 3-13

www.te.com

Dimensions are shown for reference purposes only. Specifications subject to change.

Dimensions are in millimeters unless otherwise specified.

USA: +1 800 522 6752
Asia Pacific: +86 0 400 820 6015
UK: +44 800 267 666

For additional support numbers please visit www.te.com

## MiniSeal High-Performance, Immersion-Resistant Crimp Splices (Continued)

### Table A. CMA of Typical Conductors

| Strands | 7 | 19 | 19 | 19 | 19 | 19 | 19 | 19 | 37 |
|---|---|---|---|---|---|---|---|---|---|
| AWG | 28 | 26 | 24 | 22 | 20 | 18 | 16 | 14 | 12 |
| CMA | 177 | 304 | 475 | 754 | 1216 | 1900 | 2426 | 3831 | 5874 |
| $mm^2$ | 0.09 | 0.15 | 0.24 | 0.38 | 0.61 | 0.95 | 1.21 | 1.92 | 2.94 |

### Table B. Crimp Barrel Color Code Selection

| CMA Range | 1:1 Splice (AWG Size) | Color Code |
|---|---|---|
| 304–1510 | 26–20 | Red |
| 1058–2680 | 20–16 | Blue |
| 2375–6755 | 16–12 | Yellow |

### CMA/$mm^2$ Worksheet

**Example:**

Application: A butt splice with three AWG 22 wires in one side and one AWG 18 wire in the other side:

The CMA for AWG 22 wire in Table A is 754.

Side one is therefore calculated as follows:

CMA = 3 x 754 = 2262

The other side, where the CMA for AWG 18 is 1900, is calculated as:

CMA = 1 x 1900 = 1900

Using Table B to select the smallest crimp barrel that will easily fit 2262 CMA, the blue barrel is the correct choice.

| Wire Number | CMA | $mm^2$ |
|---|---|---|
| 1 | | |
| 2 | | |
| 3 | | |
| 4 | | |
| 5 | | |
| 6 | | |
| 7 | | |
| 8 | | |
| 9 | | |
| 10 | | |
| Total | | |

**Part Number:** _____

### Table C. Stub (Parallel) Splices

| Illustration | Part No. Tin Plated | Part No. Nickel Plated | Crimp Barrel Size Range CMA Min.–Max. | I.D.dimensions Side 1 Sealing Insert | Side 1 Max. No. of Wires | Side 2 Sealing Insert | Side 2 Max. No. of Wires |
|---|---|---|---|---|---|---|---|
| | D-436-0128 Red | D-436-0119 Red | 304–1510 | 2.16 [.085] | 2 | 1.01 [.040] | 2 |
| | D-436-58 Blue | D-436-75 Blue | 1058–2680 | 4.56 [.180] | 2 | 2.28 [.090] | 2 |
| | D-436-59 Yellow | D-436-76 Yellow | 2375—6755 | 4.56 [.180] | 2 | 2.28 [.090] | 2 |
| | D-436-60 Blue | D-436-77 Blue | 1058–2680 | 2.03 [.080] | 10 (2 per hole) | 6.35 [.250] | 2 |
| | D-436-61 Yellow | D-436-78 Yellow | 2375–6755 | 2.03 [.080] | 10 (2 per hole) | 6.35 [.250] | 2 |





Catalog 1654025
Revised 3-13

www.te.com

Dimensions are shown for reference purposes only. Specifications subject to change.

Dimensions are in millimeters unless otherwise specified.

USA: +1 800 522 6752
Asia Pacific: +86 0 400 820 6015
UK: +44 800 267 666

For additional support numbers please visit www.te.com

## MiniSeal High-Performance, Immersion-Resistant Crimp Splices (Continued)

### Table D. Butt (in-line) splices

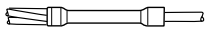

| Illustration | Part No. Tin Plated | Part No. Nickel Plated | Crimp Barrel Size Range CMA Min.–Max. | I.D.dimensions Side 1 Sealing Insert | I.D.dimensions Side 1 Max. No. of Wires | I.D.dimensions Side 2 Sealing Insert | I.D.dimensions Side 2 Max. No. of Wires |
|---|---|---|---|---|---|---|---|
| | D-436-36* Red | D-436-82 D-200-82 Red | 304–1510 | 2.16 [.085] | 2 | 2.16 [.085] | 2 |
| | D-436-37* Blue | D-436-83 D-200-83 Blue | 1058–2680 | 2.79 [.110] | 2 | 2.79 [.110] | 2 |
| | D-436-38* Yellow | D-436-84 D-200-84 Yellow | 2375–6755 | 4.32 [.170] | 2 | 4.32 [.170] | 2 |
| | D-436-0110 Red | D-436-85 Red | 304–1510 | 2.36 [.093] | 6 | 4.06 [.160] | 2 |
| | D-436-52 Blue | D-436-86 Blue | 1058–2680 | 2.36 [.093] | 6 (2 per hole) | 4.06 [.160] | 2 |
| | D-436-53 Yellow | D-436-87 Yellow | 2375–6755 | 2.36 [.093] | 6 (2 per hole) | 4.06 [.160] | 2 |
| | D-436-0115 Red | D-436-88 Red | 304–1510 | 2.36 [.093] | 6 (2 per hole) | 2.36 [.093] | 6 (2 per hole) |
| | D-436-42 Blue | D-436-89 Blue | 1058–2680 | 2.36 [.093] | 6 (2 per hole) | 2.36 [.093] | 6 (2 per hole) |
| 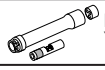 | D-436-43 Yellow | D-436-90 Yellow | 2375–6755 | 2.36 [.093] | 6 (2 per hole) | 2.36 [.093] | 6 (2 per hole) |

*Qualified to MIL-S-81824/1.

### Table E. Crimp Barrel Only

| Type | Color Code | Tin-Plated | Nickel Plated | Crimp Barrel Size Range CMA Min. - Max. |
|---|---|---|---|---|
| Butt (in-line) | Red | D-609-06 | D-609-09 | 304-1510 |
| Butt (in-line) | Blue | D-609-07 | D-609-10 | 1058-2680 |
| Butt (in-line) | Yellow | D-609-08 | D-609-11 | 2350-6755 |
| Stub (Parrel) | Red | D-609-03 | D-609-12 | 304-1510 |
| Stub (Parrel) | Blue | D-609-04 | D-609-13 | 1058-2680 |
| Stub (Parrel) | Yellow | D-609-05 | D-609-14 | 2350-6755 |

### Table F. Sealing Sleeve Only

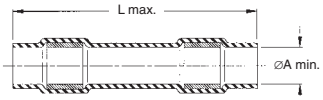


| Part No. | Color Code | L Max. | A Min. |
|---|---|---|---|
| D-436-0096 | Red | 29.2 [1.15] | 2.16 [0.085] |
| D-436-0097 | Blue | 29.2 [1.15] | 2.8 [0.110] |
| D-436-0098 | Yellow | 29.2 [1.15] | 4.32 [0.170] |



Dimensions are shown for reference purposes only. Specifications subject to change.

Dimensions are in millimeters unless otherwise specified.

USA: +1 800 522 6752
Asia Pacific: +86 0 400 820 6015
UK: +44 800 267 666

For additional support numbers please visit www.te.com

## MiniSeal High-Performance, Immersion-Resistant Crimp Splices (Continued)

### Product Characteristics

| | |
|---|---|
| **Material** | |
| Insulation | Radiation-crosslinked, heat-shrinkable polyvinylidene fluoride (D-436) |
| Crimp barrel | Tin- or nickel-plated copper |
| Meltable inserts | Meltable thermoplastic (D-436) |
| **Typical Performance** | |
| Voltage drop | 6.9 mV at 4.5 A vs 8.1 mV for an equal length of wire |
| Tensile strength | Exceeds strength of conductor |
| Dielectric strength | 2.5 kV |
| Temperature rating | -55°C to 150°C [-67°F to 302°F] (D-436 Series) |
| Insulation resistance | 5000 megohms |

### Specifications/Approvals

| Series | Military |
|---|---|
| D-436 | SAE-AS-81824/1 for D-436-36/37/38 |

### Installation

For proper installation of these devices, the correct crimp tool (TE part number AD-1377) and a heating tool and reflector attachment must be used.

Any one of the following TE heating tools is recommended:

- HL1910E/HL2010E
- AA-400 Super Heater

Refer to TE installation procedure RCPS-200-20 for detailed instructions and recommended reflector attachments.

You will find ordering information for these tools in Section 10.







Dimensions are shown for reference purposes only. Specifications subject to change.

Dimensions are in millimeters unless otherwise specified.

USA: +1 800 522 6752
Asia Pacific: +86 0 400 820 6015
UK: +44 800 267 666

For additional support numbers please visit www.te.com

## 200° MiniSeal High-Performance, Immersion-Resistant Crimp Splices

### Product Facts

- **Immersion-resistant crimp splices while meeting all requirements of SAE-AS-81824/1 (modified for 200°C applications)**
- **Small size**
- **Light weight**
- **Transparent heat-shrinkable insulation sleeve provides environmental protection and strain relief**
- **Splices provide sealing to unetched wire insulations**
- **No need to staffer wire splices**

In-line nickel plated sealed crimp splices for 200˚C applications were developed for the growing needs of high temperature applications in the aerospace and defense industry.

200˚C MiniSeal crimp splices provides the smallest, lightest, and the most environmental-resistant splices available, while meeting all requirements of SAE-AS81824/1 (modified for 200˚C applications).

### Applications

MiniSeal wire-to-wire splicing products are ideal for aerospace and defense applications where performance, reliability or size reduction is essential.

Designed to provide an immersion resistant in-line splice on 1:1 wires for the following: wire range from 26 AWG to 12 AWG; nickel-plated conductors and insulation rated for at least 135˚C.

| Available in: | |
|---|---|
| Americas | ■ |
| Europe | ■ |
| Asia Pacific | ■ |



Catalog 1654025
Revised 3-13

www.te.com

Dimensions are shown for reference purposes only. Specifications subject to change.

Dimensions are in millimeters unless otherwise specified.

USA: +1 800 522 6752
Asia Pacific: +86 0 400 820 6015
UK: +44 800 267 666

For additional support numbers please visit www.te.com

## 200° MiniSeal High-Performance, Immersion-Resistant Crimp Splices (Continued)

### Product Characteristics

| Material | |
|---|---|
| Insulation | Heat-shrinkable, transparent blue, radiation cross-linked modified fluoropolymer |
| Crimp splicer | Base Metal: Copper alloy 101 or 102 per ASTM B75<br>Plating: Nickel per SAE AMS-QQ-N-290<br>Color Code: see table below |
| Meltable rings | Environment resistant modified thermoplastic fluoroelastomer<br>Color: Light blue |
| **Typical Performance** | |
| Voltage drop | 6.9 mV at 4.5 A vs 8.1 mV for an equal length of wire |
| Tensile strength | Exceeds strength of conductor |
| Dielectric strength | 2.5 kV |
| Temperature rating | -55˚C to 200°C [-67°F to 392°F] |
| Insulation resistance | 5000 megohms |

### Specifications/Approvals

| Series | Military |
|---|---|
| D-200 | Meets the requirements of SAE-AS-81824 |

### Part Numbers

| Part No. | Color Code | Part Number |
|---|---|---|
| D-200-82 | Red | D17660-000 |
| D-200-83 | Blue | A36675-000 |
| D-200-84 | Yellow | C60253-000 |

### Product Dimensions

| Product Name | Product Rev. | I.D.* a. min b. max | Crimp Splicer øA | øB | C | D | E max. | Color Code |
|---|---|---|---|---|---|---|---|---|
| D-200-82 | A | 2.16 (0.085)<br>0.64 (0.025) | 1.27 (0.050)<br>1.14 (0.045) | 2.03 (0.080)<br>1.91 (0.075) | 12.95 (0.510)<br>12.45 (0.490) | 6.22 (0.245)<br>5.72 (0225) | 0.38 (0.015) | Red |
| D-200-83 | A | 2.79 (0.110)<br>0.64(0.025) | 1.75 (0.069)<br>1.63 (0.064) | 2.70 (0.106)<br>2.57 (0.101) | 14.86 (0.585)<br>14.35 (0.565) | 7.11 (0.280)<br>6.60 (0.260) | 0.51 (0.020) | Blue |
| D-200-84 | A | 4.32 (0.170)<br>0.64 (0.025) | 2.60 (0.102)<br>2.46 (0.097) | 3.89 (0.153)<br>3.73 (0.147) | 14.86 (0.585)<br>14.35 (0.565) | 7.11 (0.280)<br>6.60 (0.260) | 1.27 (0.050) | Yellow |

*I.D.: a- As received; b- After unrestricted recovery thru meltable insert.

| Product Name | MIL Spec Equivalent Size | Wire Range | Wgt. Lbs/Mpc max. |
|---|---|---|---|
| D-200-82 | M81824/1-1 | 26-20 | 1.02 |
| D-200-83 | M81824/1-2 | 20-16 | 1.61 |
| D-200-84 | M81824/1-3 | 16-12 | 2.72 |





Catalog 1654025
Revised 3-13

www.te.com

Dimensions are shown for reference purposes only. Specifications subject to change.

Dimensions are in millimeters unless otherwise specified.

USA: +1 800 522 6752
Asia Pacific: +86 0 400 820 6015
UK: +44 800 267 666

For additional support numbers please visit www.te.com

## Introduction

TE insulated electrical terminal products provide reliable, repeatable, and rugged examples of terminals available. We start on the front end with terminal sizes and configurations that meet or exceed industry standards in terms of material selection, surface treatment, and electrical performance.

Here the comparison stops. What separates Raychem brand products from the rest of the industry are the materials and termination techniques used on the back end of the products, which provide unparalleled value.

Products include:

- *DuraSeal heat-shrinkable nylon crimp products,* which protect against water, condensation, salt, and corrosion. Their tough, heat-shrinkable nylon tubing resists abrasion and cut-through damage, provides strain relief, and protects against vibration damage. DuraSeal products are simple and quick to install using a crimp tool and a heat source. They accommodate a wide range of wire sizes and are color-coded for easy identification, yet are transparent for visual inspection of the finished splice.
- *SolderGrip heat-shrinkable twist-on products,* which utilize a spiral copper coil that grips and compresses the conductors and allows a prefluxed solder ring to flow to the center of the splicing area, resulting in a highly reliable, repeatable joint. SolderGrip terminals use a durable polyvinylidene fluoride heat-shrinkable tubing that protects the electrical joint and provides insulation and strain relief. The SolderGrip technology is a reliable means of terminating more than two conductors time after time. SolderGrip terminals can terminate a variety of conductor types (solid and stranded) and platings. Terminations on more than eight individual conductors in a single joint have been successfully demonstrated using this product.

DuraSeal product delivers protected electrical joints on industry standard terminals and is suitable for harsh environments.

## DuraSeal Heat-Shrinkable Environmentally Sealed, Nylon Insulated Crimp Terminals and Disconnects

### Product Facts

- Resistance to moisture and abrasion
- Strain relief
- Protection from wire pull-out
- Easy installation
- UL and CUL listed

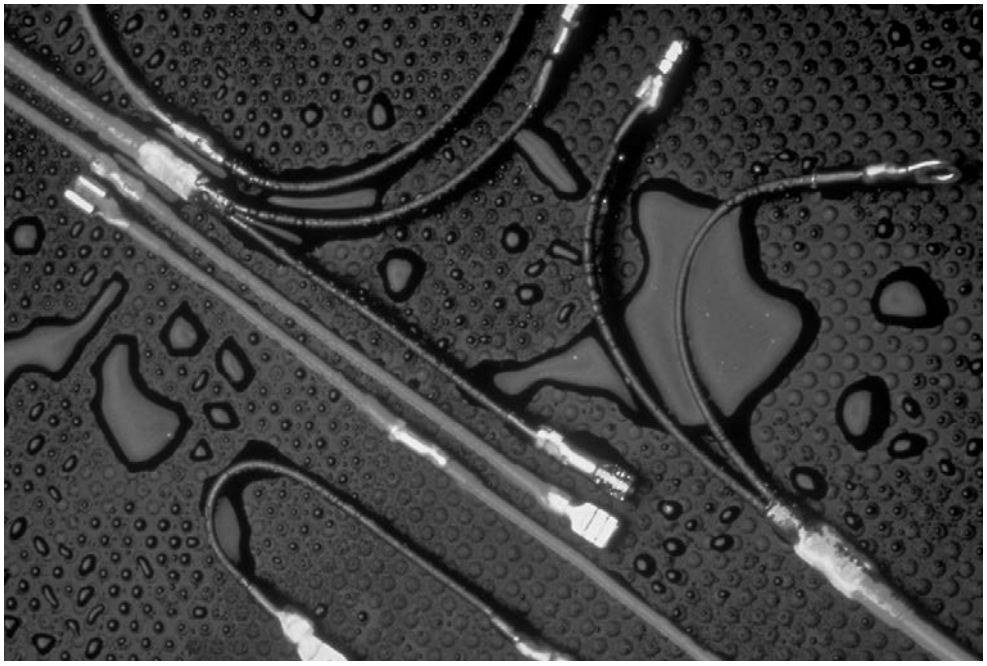

### Applications

DuraSeal products insulate and protect electrical connections from mechanical abuse, wire pull-out, and abrasion while resisting water, salt, and other contaminant's.

DuraSeal devices provide a tough, environmentally sealed wire connection. Their crimp barrel or terminal, encased in rugged, heat-shrinkable nylon tubing lined with a special hot-melt adhesive, resists damage from abrasions and cuts.

DuraSeal devices retain flexibility and impact-resistance long after similar products have become brittle.

DuraSeal devices accommodate wire gauge sizes 22 to 10. They are color-coded for easy identification of gauge sizes, yet transparent for inspection of the finished splice.

### Approvals and Reference Documents

| | |
|---|---|
| Agency approvals | UL listed component, file E87681, terminals except quick connect terminals; file E157833, quick connect terminals |
| Reference documents | TE specifications RB-108,<br>Specification DuraSeal crimp terminals<br>DuraSeal selection guide (H54153)<br>DuraSeal installation guidelines (H54154) |

| Available in: | |
|---|---|
| Americas | ■ |
| Europe | ■ |
| Asia Pacific | ■ |





Catalog 1654025
Revised 3-13

www.te.com

Dimensions are shown for reference purposes only. Specifications subject to change.

Dimensions are in millimeters unless otherwise specified.

USA: +1 800 522 6752
Asia Pacific: +86 0 400 820 6015
UK: +44 800 267 666

For additional support numbers please visit www.te.com

## DuraSeal Heat-Shrinkable Environmentally Sealed, Nylon Insulated Crimp Terminals and Disconnects (Continued)

### Product Characteristics

| | Property | Unit | Requirement | Method of Test |
|---|---|---|---|---|
| Physical | Dimensions<br>Tensile strength | Inches<br>Pounds | None<br>8 to 40 lbs depending on AWG | See product dimensions<br>UL486C, IEC512-8 |
| | **Property** | **Unit** | **Typical value** | **Method of Test** |
| Electrical | Voltage drop<br>Insulation resistance<br>Dielectric withstand voltage | Millivolts<br>Megohms<br>Kilovolts | Less than equal length of wire<br>103 min.<br>2.5 | MIL-S-81824, IEC512-2<br>MIL-STD-202 method 302<br>MIL-STD-202F method 301, IEC512-2 |
| | **Property** | **Unit** | **Requirement** | **Method of Test** |
| Chemical | Diesel fuel<br>Brake fluid<br>Antifreeze<br>5% salt water<br>Motor oil | — | Meet electrical test listed above after conditioning. | ASTM D 3032, ESA-603D |
| Environmental (Fluid) | Humidity<br>Immersion<br>Vibration<br>Bending<br>Thermal shock<br>Heat aging (168h @ 85°C [185°F)<br>Salt spray | — | Meet electrical test listed above after conditioning. | MIL-STD-202F method 106, IEC68-2-30<br>MIL-STD-202F condition C, IEC68-2-14 test NC<br>MIL-STD-202F method 201, IEC68-2-6<br>UL486C, IEC512-8<br>MIL-STD-202F method 107, IEC68-2-14 test N<br>MIL-STD-202F, IEC68-2-2<br>MIL-STD-202F method 101, IEC68-2-11 |
| Operating conditions | Temperature rating<br>Minimum shrink temperature<br>Voltage rating | — | -55°C to +125°C [-67°F to -257°F]<br>180°C [356°F]<br>600 Volt max | None<br>None<br>None |

### Fork Terminals

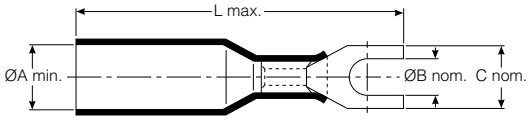


| Part No. | Fork Terminal Dimensions | | | | | Color | Insulation Conductor (AWG) | Wire Dimensions | |
|---|---|---|---|---|---|---|---|---|---|
| | A Min. | Stud Size | | C Nom. | L Max. | | | Insulation O.D. (Max.) | O.D. (Min.) |
| | | Metric | Imperial | | | | | | |
| B-106-2401 | 3.81 [.15] | M4 | 8 | 7.87 [.31] | 32.00 [1.26] | Red | 22–18 | 3.81 [.150] | 1.40 [.055] |
| B-106-2402 | 4.57 [.18] | M4 | 8 | 7.87 [.31] | 35.05 [1.38] | Blue | 16–14 | 4.45 [.175] | 2.00 [.080] |
| B-106-2403 | 6.35 [.25] | M4 | 8 | 7.87 [.31] | 38.10 [1.50] | Yellow | 12–10 | 6.35 [.250] | 2.79 [.110] |
| B-106-2502 | 4.57 [.18] | M5 | 10 | 9.91 [.39] | 35.05 [1.38] | Blue | 16–14 | 4.45 [.175] | 2.00 [.080] |
| B-106-2503 | 6.35 [.25] | M5 | 10 | 9.91 [.39] | 40.15 [1.58] | Yellow | 12–10 | 6.35 [.250] | 2.79 [.110] |



Dimensions are shown for reference purposes only. Specifications subject to change.

Dimensions are in millimeters unless otherwise specified.

USA: +1 800 522 6752
Asia Pacific: +86 0 400 820 6015
UK: +44 800 267 666

For additional support numbers please visit www.te.com

## DuraSeal Heat-Shrinkable Environmentally Sealed, Nylon Insulated Crimp Terminals and Disconnects (Continued)

### Ring Terminals

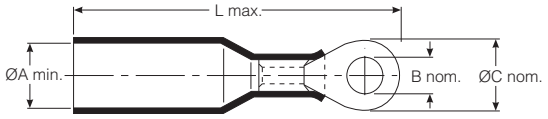


| Part No. | Ring Terminal Dimensions | | | | | Color | Wire Dimensions | | |
|---|---|---|---|---|---|---|---|---|---|
| | A Min. | Stud Size | | C Nom. | L Max. | | Insulation Conductor (AWG) | Insulation O.D. (Max.) | O.D. (Min.) |
| | | Metric | Imperial | | | | | | |
| B-106-1401 | 3.81 [.15] | M4 | 8 | 7.88 [.31] | 32.00 [1.26] | Red | 22–18 | 3.81 [.150] | 1.40 [.055] |
| B-106-1501 | 3.81 [.15] | M5 | 10 | 9.91 [.39] | 34.04 [1.34] | Red | 22–18 | 3.81 [.150] | 1.40 [.055] |
| B-106-1601 | 3.81 [.15] | M6 | 1/4 | 11.94 [.47] | 36.07 [1.42] | Red | 22–18 | 3.81 [.150] | 1.40 [.055] |
| B-106-1801 | 3.81 [.15] | M8 | 5/16 | 13.97 [.55] | 39.12 [1.54] | Red | 22–18 | 3.81 [.150] | 1.40 [.055] |
| B-106-1991 | 3.81 [.15] | M10 | 3/8 | 17.78 [.70] | 43.18 [1.70] | Red | 22–18 | 3.81 [.150] | 1.40 [.055] |
| B-106-1402 | 4.57 [.18] | M4 | 8 | 7.88 [.31] | 33.02 [1.30] | Blue | 16–14 | 4.45 [.175] | 2.00 [.080] |
| B-106-1502 | 4.57 [.18] | M5 | 10 | 9.91 [.39] | 35.05 [1.38] | Blue | 16–14 | 4.45 [.175] | 2.00 [.080] |
| B-106-1602 | 4.57 [.18] | M6 | 1/4 | 11.94 [.47] | 36.58 [1.44] | Blue | 16–14 | 4.45 [.175] | 2.00 [.080] |
| B-106-1802 | 4.57 [.18] | M8 | 5/16 | 13.97 [.55] | 40.13 [1.58] | Blue | 16–14 | 4.45 [.175] | 2.00 [.080] |
| B-106-1992 | 4.57 [.18] | M10 | 3/8 | 17.78 [.70] | 43.94 [1.73] | Blue | 16–14 | 4.45 [.175] | 2.00 [.080] |
| B-106-1403 | 6.35 [.25] | M4 | 8 | 7.88 [.31] | 38.10 [1.50] | Yellow | 12–10 | 6.35 [.250] | 2.79 [.110] |
| B-106-1503 | 6.35 [.25] | M5 | 10 | 9.91 [.39] | 40.13 [1.58] | Yellow | 12–10 | 6.35 [.250] | 2.79 [.110] |
| B-106-1603 | 6.35 [.25] | M6 | 1/4 | 11.94 [.47] | 41.66 [1.64] | Yellow | 12–10 | 6.35 [.250] | 2.79 [.110] |
| B-106-1803 | 6.35 [.25] | M8 | 5/16 | 13.97 [.55] | 45.21 [1.78] | Yellow | 12–10 | 6.35 [.250] | 2.79 [.110] |
| B-106-1993 | 6.35 [.25] | M10 | 3/8 | 17.78 [.70] | 46.99 [1.85] | Yellow | 12–10 | 6.35 [.250] | 2.79 [.110] |





Catalog 1654025
Revised 3-13

www.te.com

Dimensions are shown for reference purposes only. Specifications subject to change.

Dimensions are in millimeters unless otherwise specified.

USA: +1 800 522 6752
Asia Pacific: +86 0 400 820 6015
UK: +44 800 267 666

For additional support numbers please visit www.te.com

## DuraSeal Heat-Shrinkable Environmentally Sealed, Nylon Insulated Crimp Terminals and Disconnects (Continued)

### Push-on Terminals

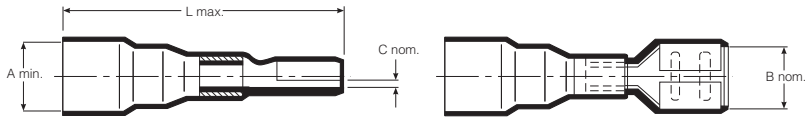


| Part No. | Tab Size (inches) | Push-on Terminal Dimensions | | | | Color | Insulation Conductor (AWG) | Wire Dimensions | |
|---|---|---|---|---|---|---|---|---|---|
| | | A Min. | B Nom. | C Nom. | L Max. | | | Insulation O.D. (Max.) | O.D. (Min.) |
| B-106-3631 | .250 x .032 | 3.81 [.150] | 6.35 [.250] | .81 [.032] | 30.48 [1.200] | Red | 22–18 | 3.81 [.150] | 1.40 [.055] |
| B-106-3632 | .250 x .032 | 4.57 [.180] | 6.35 [.250] | .81 [.032] | 32.00 [1.260] | Blue | 16–14 | 4.45 [.175] | 2.00 [.080] |
| B-106-3633 | .250 x .032 | 6.35 [.250] | 6.35 [.250] | .81 [.032] | 33.02 [1.300] | Yellow | 12–10 | 6.35 [.250] | 2.79 [.110] |
| B-106-3281 | .110 x .020 | 3.81 [.150] | 2.79 [.110] | .51 [.020] | 22.86 [.900] | Red | 22–18 | 3.81 [.150] | 1.40 [.055] |
| B-106-3481 | .187 x .020 | 3.81 [.150] | 4.75 [.187] | .51 [.020] | 30.48 [1.200] | Red | 22–18 | 3.81 [.150] | 1.40 [.055] |

### Tab Terminals

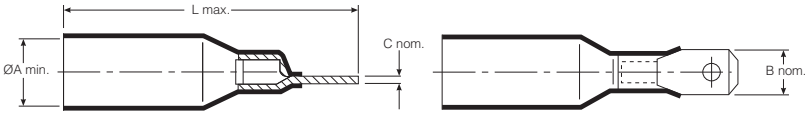


| Part No. | Tab Size (inches) | Tab Terminal Dimensions | | | | Color | Insulation Conductor (AWG) | Wire Dimensions | |
|---|---|---|---|---|---|---|---|---|---|
| | | A Min. | B Nom. | C Nom. | L Max. | | | Insulation O.D. (Max.) | O.D. (Min.) |
| B-106-4631 | .250 x .032 | 3.81 [.150] | 6.35 [.250] | .81 [.032] | 30.48 [1.20] | Red | 22–18 | 3.81 [.150] | 1.40 [.055] |
| B-106-4632 | .250 x .032 | 4.57 [.180] | 6.35 [.250] | .81 [.032] | 32.00 [1.26] | Blue | 16–14 | 4.45 [.175] | 2.00 [.080] |



Dimensions are shown for reference purposes only. Specifications subject to change.

Dimensions are in millimeters unless otherwise specified.

USA: +1 800 522 6752
Asia Pacific: +86 0 400 820 6015
UK: +44 800 267 666

For additional support numbers please visit www.te.com

## DuraSeal Heat-Shrinkable Environmentally Sealed, Nylon Insulated Crimp Terminals and Disconnects (Continued)

### Pin Terminals

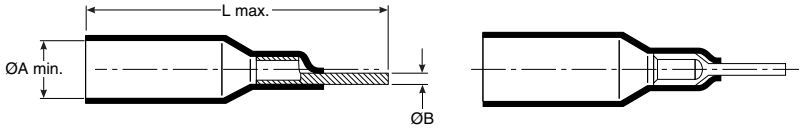


| Part No. | Pin Terminal Dimensions | | | Color | Wire Dimensions | | |
|---|---|---|---|---|---|---|---|
| | A Min. | B Nom. | L Max. | | Conductor (AWG) | Insulation O.D. (Max.) | Insulation O.D. (Min.) |
| B-106-6201 | 3.81 [.150] | 2.00 [.080] | 30.99 [1.220] | Red | 22–18 | 3.81 [.150] | 1.40 [.055] |

### Bullet Terminals

Fig. 1

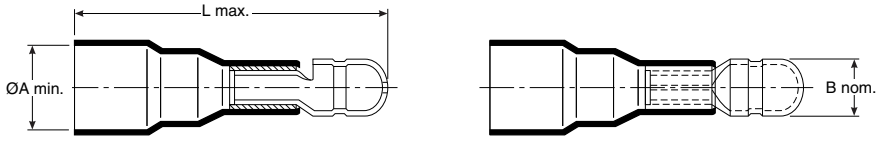


Fig. 2

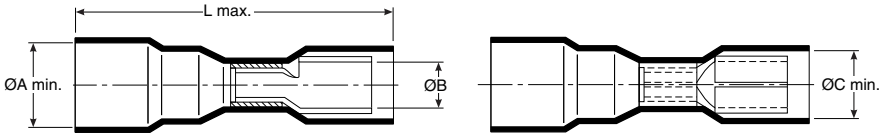


| Part No. | Fig. | Type | Bullet Terminal Dimensions | | | | Color | Conductor (AWG) | Wire Dimensions | |
|---|---|---|---|---|---|---|---|---|---|---|
| | | | A Min. | B Nom. | C Min. | L Max. | | | Insulation O.D. (Max.) | Insulation O.D. (Min.) |
| B-106-7401 | 1 | M | 3.81 [.150] | 3.81 [.150] | — | 33.53 [1.32] | Red | 22–18 | 3.81 [.150] | 1.40 [.055] |
| B-106-7502 | 1 | M | 4.57 [.180] | 5.08 [.200] | — | 34.54 [1.36] | Blue | 16–14 | 4.45 [.175] | 2.00 [.080] |
| B-106-8401 | 2 | F | 3.81 [.150] | 3.81 [.150] | 5.59 [.220] | 30.48 [1.20] | Red | 22–18 | 3.81 [.150] | 1.40 [.055] |
| B-106-8502 | 2 | F | 4.57 [.180] | 5.08 [.200] | 6.10 [.240] | 32.51 [1.28] | Blue | 16–14 | 4.45 [.175] | 2.00 [.080] |







Dimensions are shown for reference purposes only. Specifications subject to change.

Dimensions are in millimeters unless otherwise specified.

USA: +1 800 522 6752
Asia Pacific: +86 0 400 820 6015
UK: +44 800 267 666

For additional support numbers please visit www.te.com

## DuraSeal Heat-Shrinkable Environmentally Sealed, Nylon Insulated Crimp Terminals and Disconnects (Continued)

### Product Characteristics (Typical)

| | |
|---|---|
| Operating temperature | -55°C to 125°C [-67°F to 257°F] |
| Shrink ratio | Approximately 2:1 |
| Physical properties | Cut-through resistance: 31.7 kg [70 lb]<br>Wire pullout after crimping and recovery: red: 11.3 kg [25 lb]; blue: 22.7 kg [50 lb]; yellow: 27.2 kg [60 lb]<br>Not flame-retardant<br>No cracking after heat aging for 168 hr at 160°C [320°F] |
| Chemical properties | Solvent resistance: isopropyl alcohol, trichloroethylene, gasoline, battery acid, diesel fuel, motor oil, antifreeze, brake fluid, 5% salt water |
| Electrical properties | Dielectric strength: 1000 V<br>Insulation resistance: 10 megohms |

### Specifications/Approvals

| Series | Agency | TE |
|---|---|---|
| B-106 | UL and CUL 91J4, File E87681<br>Lloyd's listed, File 65 247 HH 02-93<br>UL and CUL E157833<br>(B-106-3XXX/B-106-4XXX) | RB-108 |

### Installation

1. Select appropriate size. For terminal and disconnect terminations, strip wire 6.5 mm (1/4 inch).

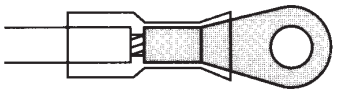

2. Crimp using AD-1522 crimp tool for preinsulated crimps.

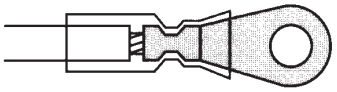

3. Heat terminal or disconnect with heat gun until tubing recovers and adhesive flows. Avoid heating ring or fork metallic parts.

For proper installation of these devices, the correct crimp tool and heating tool with reflector attachment must be used. The AD-1522 crimp tool and HL1910E/HL2010E heating tools are recommended. You will find ordering information for these tools in Section 10. Refer to TE installation procedure RPIP-684-00 for detailed instructions.



Dimensions are shown for reference purposes only. Specifications subject to change.

Dimensions are in millimeters unless otherwise specified.

USA: +1 800 522 6752
Asia Pacific: +86 0 400 820 6015
UK: +44 800 267 666

For additional support numbers please visit www.te.com

## SolderGrip Self-Fixturing Insulated Terminals

### Product Facts

- **Transparent insulation sleeve provides encapsulation, inspectability, strain relief, and insulation**
- **Spiral copper coil grips and compresses the conductors for optimum solder connection**
- **Prefluxed solder preform provides a controlled soldering process.**
- **One-piece design for easy installation**
- **Accommodates a wide variety of conductor types, quantities, sizes, and plating types unmatched by any other termination technique**
- **Parts meet the performance requirements of MIL-T-7928G**

### Product option

| Product Series | Environmental Protection |
|---|---|
| SGRT | Splashproof (not RoHS compliant) |

### Applications

Used for terminating multiple wires to terminals.

### Product Selection Process

1. Determine the wire combination (number of wires and size) of the wire bundle you wish to terminate.
2. Use Table C to select the correct terminal for AWG wire combination.* Example: For connecting a bundle with one 12 AWG wire (1 #12) and two 18 AWG wires (+ 2 #18) to a terminal, you need an SGRT-4-XX terminal.
3. Determine the correct stud size.
4. Select the correct part number from Table A for that stud size in the terminal series and size you selected in Step 2. Example: If the stud size is 1/4, select part number SGRT-4-06.
5. Verify that the wire bundle (with wire insulation) does not exceed the maximum diameter allowed for the part you selected. Simply check the bundle's diameter against the maximum diameter that Table A lists for that part.
6. Verify that the total amperage to be applied does not exceed the maximum amp rating for the part as specified in Table A.

*If the wire combination is not listed in Table B, use the CMA ($mm^2$) method of determining wire bundle size (see "CMA/$mm^2$ Calculation" on page 8-36).

Using Table B, select the smallest size part that will fit your total wire CMA ($mm^2$) value.

### Table A. Part Number Selection

| SolderGrip Part No. | Stud Size | Maximum Bundle Diameter† | Maximum Amp Rating | Wire Range (Min.–Max.) CMA [$mm^2$] | Typical Length |
|---|---|---|---|---|---|
| SGRT-1-02 | 2 [2] | 4.1 [.161] | 12.5 A | 1400–5000 [0.7–2.5] | 38 [1 1/2] |
| SGRT-2-03 | 3 [6] | 5.0 [.195] | 15 A | 2400–6000 [1.2–3.0] | 38 [1 1/2] |
| SGRT-2-04 | 4 [8] | — | 15 A | 2400–6000 [1.2–3.0] | 38 [1 1/2] |
| SGRT-2-05 | 5 [10] | — | 15 A | 2400–6000 [1.2–3.0] | 38 [1 1/2] |
| SGRT-2-06 | 6 [1/4] | — | 15 A | 2400–6000 [1.2–3.0] | 38 [1 1/2] |
| SGRT-3-06 | 6 [1/4] | 6.5 [.255] | 33 A | 5000–13,200 [2.5–6.6] | 44.5 [1 3/4] |
| SGRT-3-08 | 8 [5/16] | — | 33 A | 5000–13,200 [2.5–6.6] | 51.0 [2] |
| SGRT-4-06 | 6 [1/4] | 9.0 [.355] | 56 A | 12,000–22,400 [6.0–11.2] | 44.5 [1 3/4] |
| SGRT-4-08 | 8 [5/16] | — | 56 A | 12,000–22,400 [6.0–11.2] | 51 [2] |

†Maximum bundle diameter is measured over wire insulation.

| Available in: | |
|---|---|
| Americas | ■ |
| Europe | ■ |
| Asia Pacific | ■ |





Catalog 1654025
Revised 3-13

www.te.com

Dimensions are shown for reference purposes only. Specifications subject to change.

Dimensions are in millimeters unless otherwise specified.

USA: +1 800 522 6752
Asia Pacific: +86 0 400 820 6015
UK: +44 800 267 666

For additional support numbers please visit www.te.com

## SolderGrip Self-Fixturing Insulated Terminals (Continued)

### CMA/mm² Calculation

To calculate the total circular mil or mm² area of the wire bundle to be terminated, follow these steps:

1. Choose either CMA or mm² as your unit of measure for selection purposes and continue to use it for all your selection criteria. (Both measures provide the same results.)
2. In the workspace below, list the CMA or mm² for each conductor in the bundle. (Table B provides the CMA of typical conductors.)
3. Add together the values listed in the workspace below to obtain the total area.
4. Use Table A to select the smallest terminator that will fit the total CMA (mm²).

| Wire Number | CMA | mm² |
|---|---|---|
| 1 | | |
| 2 | | |
| 3 | | |
| 4 | | |
| 5 | | |
| 6 | | |
| 7 | | |
| 8 | | |
| 9 | | |
| 10 | | |
| | | |
| Total | | |

**Solder Grip Part No.** _____

### CMA/mm² Example

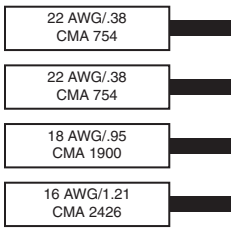


Total CMA = 5834
Total mm² = 2.92
Correct part number (based on CMA of 5834 or mm² of 2.92):
SGRT-2-XX if bundle OD is less than 5.0 mm (0.195 in).

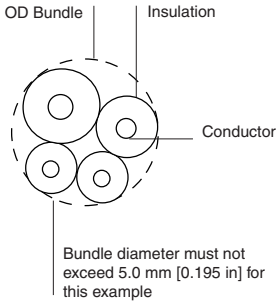

## SolderGrip Self-Fixturing Insulated Terminals (Continued)

### Table B. CMA of Typical Copper Conductors

| Strands | 7 | 19 | 19 | 19 | 19 | 19 | 19 | 19 | 37 |
|---|---|---|---|---|---|---|---|---|---|
| AWG | 28 | 26 | 24 | 22 | 20 | 18 | 16 | 14 | 12 |
| CMA | 177 | 304 | 475 | 754 | 1216 | 1900 | 2426 | 3831 | 5874 |
| $mm^2$ | 0.09 | 0.15 | 0.24 | 0.38 | 0.61 | 0.95 | 1.21 | 1.92 | 2.94 |

### Table C. SolderGrip Wire Combinations (see Table A for Terminal Size [-XX])

| Wire Combinations | Part No. | Wire Combinations | Part No. | Wire Combinations | Part No. |
|---|---|---|---|---|---|
| 1 # 8 | SGRT-4-XX | 1 # 12 + 1 # 16 + 4 # 18 | SGRT-4-XX | 1 # 14 + 4 # 20 | SGRT-3-XX |
| 1 # 8 + 1 # 16 | SGRT-4-XX | 1 # 12 + 2 # 16 | SGRT-3-XX | 1 # 14 + 1 # 18 | SGRT-2-XX |
| 2 # 8 + 2 # 16 | SGRT-4-XX | 1 # 12 + 2 # 16 + 1 # 18 | SGRT-3-XX | 1 # 14 + 1 # 18 + 1 # 20 | SGRT-3-XX |
| 1 # 8 + 1 # 14 | SGRT-4-XX | 1 # 12 + 2 # 16 + 2 # 18 | SGRT-4-XX | 1 # 14 + 2 # 18 | SGRT-3-XX |
| 1 # 10 | SGRT-3-XX | 1 # 12 + 3 # 16 | SGRT-4-XX | 1 # 14 + 3 # 18 | SGRT-3-XX |
| 1 # 10 + 1 to 3 # 18 | SGRT-3-XX | 1 # 12 + 4 # 16 | SGRT-4-XX | 1 # 14 + 4 # 18 | SGRT-3-XX |
| 1 # 10 + 2 # 18 | SGRT-3-XX | 1 # 12 + 5 # 16 | SGRT-4-XX | 1 # 14 + 5 # 18 | SGRT-4-XX |
| 1 # 10 + 3 # 18 | SGRT-4-XX | 1 # 12 + 1 # 14 + 1 # 18 | SGRT-3-XX | 1 # 14 + 1 # 16 | SGRT-3-XX |
| 1 # 10 + 1 # 16 | SGRT-3-XX | 1 # 12 + 1 # 14 + 2 # 18 | SGRT-4-XX | 1 # 14 + 1 # 16 + 1 # 20 | SGRT-3-XX |
| 1 # 10 + 1 # 16 + 1 # 18 | SGRT-4-XX | 1 # 12 + 1 # 14 + 3 # 18 | SGRT-4-XX | 1 # 14 + 1 # 16 + 1 # 18 | SGRT-3-XX |
| 1 # 10 + 1 # 16 + 2 # 18 | SGRT-4-XX | 1 # 12 + 1 # 14 + 1 # 16 | SGRT-3-XX | 1 # 14 + 1 # 16 + 2 # 18 | SGRT-3-XX |
| 1 # 10 + 2 # 16 | SGRT-4-XX | 1 # 12 + 1 # 14 + 2 # 16 | SGRT-4-XX | 1 # 14 + 1 # 16 + 3 # 18 | SGRT-3-XX |
| 1 # 10 + 3 # 16 | SGRT-4-XX | 1 # 12 + 1 # 14 + 3 # 16 | SGRT-4-XX | 1 # 14 + 1 # 16 + 4 # 18 | SGRT-4-XX |
| 1 # 10 + 4 # 16 | SGRT-4-XX | 1 # 12 + 1 # 14 + 4 # 16 | SGRT-4-XX | 1 # 14 + 2 # 16 | SGRT-3-XX |
| 1 # 10 + 5 # 16 | SGRT-4-XX | 1 # 12 + 2 # 14 | SGRT-4-XX | 1 # 14 + 2 # 16 + 1 # 18 | SGRT-3-XX |
| 1 # 10 + 1 # 14 | SGRT-3-XX | 1 # 12 + 2 # 14 + 1 # 18 | SGRT-4-XX | 1 # 14 + 2 # 16 + 2 # 18 | SGRT-3-XX |
| 1 # 10 + 1 # 14 + 1 # 18 | SGRT-4-XX | 1 # 12 + 2 # 14 + 1 # 16 | SGRT-4-XX | 1 # 14 + 2 # 16 + 3 # 18 | SGRT-4-XX |
| 1 # 10 + 1 # 14 + 1 # 16 | SGRT-4-XX | 1 # 12 + 2 # 14 + 2 # 16 | SGRT-4-XX | 1 # 14 + 3 # 16 | SGRT-3-XX |
| 1 # 10 + 1 # 14 + 2 # 16 | SGRT-3-XX | 1 # 12 + 2 # 14 + 3 # 16 | SGRT-4-XX | 1 # 14 + 3 # 16 + 1 # 18 | SGRT-3-XX |
| 1 # 10 + 1 # 14 + 3 # 16 | SGRT-4-XX | 1 # 12 + 3 # 14 | SGRT-4-XX | 1 # 14 + 3 # 16 + 2 # 18 | SGRT-4-XX |
| 1 # 10 + 2 # 14 | SGRT-4-XX | 1 # 12 + 3 # 14 + 1 # 16 | SGRT-4-XX | 1 # 14 + 4 # 16 | SGRT-4-XX |
| 1 # 10 + 3 # 14 | SGRT-4-XX | 1 # 12 + 4 # 14 | SGRT-4-XX | 1 # 14 + 4 # 16 + 1 # 18 | SGRT-4-XX |
| 1 # 10 + 1 # 12 | SGRT-4-XX | 2 # 12 + 1 # 18 | SGRT-4-XX | 1 # 14 + 5 # 16 | SGRT-4-XX |
| 1 # 10 + 1 # 12 + 1 # 14 | SGRT-4-XX | 2 # 12 + 1 # 16 | SGRT-4-XX | 2 # 14 | SGRT-3-XX |
| 1 # 10 + 2 # 12 | SGRT-4-XX | 2 # 12 + 2 # 16 + 1 # 18 | SGRT-4-XX | 2 # 14 | SGRT-3-XX |
| 2 # 10 | SGRT-4-XX | 2 # 12 + 3 # 16 | SGRT-4-XX | 2 # 14 | SGRT-3-XX |
| 2 # 10 + 1 # 16 | SGRT-4-XX | 2 # 12 + 1 # 14 + 1 # 18 | SGRT-4-XX | 2 # 14 | SGRT-3-XX |
| 1 # 12 | SGRT-3-XX | 2 # 12 + 1 # 14 + 1 # 16 | SGRT-4-XX | 2 # 14 | SGRT-3-XX |
| 1 # 12 + 1 # 18 | SGRT-3-XX | 2 # 12 + 2 # 14 | SGRT-4-XX | 2 # 14 + 1 # 16 | SGRT-3-XX |
| 1 # 12 + 2 # 18 | SGRT-3-XX | 3 # 12 + 1 # 18 | SGRT-4-XX | 2 # 14 + 1 # 16 | SGRT-3-XX |
| 1 # 12 + 3 # 18 | SGRT-3-XX | 3 # 12 + 1 # 16 | SGRT-4-XX | 2 # 14 + 1 # 16 | SGRT-3-XX |
| 1 # 12 + 4 # 18 | SGRT-4-XX | 3 # 12 + 1 # 14 | SGRT-4-XX | 2 # 14 + 1 # 16 | SGRT-3-XX |
| 1 # 12 + 5 # 18 | SGRT-4-XX | 1 # 14 | SGRT-2-XX | 2 # 14 + 2 # 16 | SGRT-3-XX |
| 1 # 12 + 1 # 16 | SGRT-3-XX | 1 # 14 + 1 # 22 | SGRT-2-XX | 2 # 14 + 2 # 16 | SGRT-3-XX |
| 1 # 12 + 1 # 16 + 1 # 18 | SGRT-3-XX | 1 # 14 + 1 # 20 | SGRT-2-XX | 2 # 14 + 3 # 16 | SGRT-4-XX |
| 1 # 12 + 1 # 16 + 2 # 18 | SGRT-3-XX | 1 # 14 + 2 # 20 | SGRT-3-XX | 2 # 14 + 4 # 16 | SGRT-4-XX |
| 1 # 12 + 1 # 16 + 3 # 18 | SGRT-4-XX | 1 # 14 + 3 # 20 | SGRT-3-XX | 3 # 14 | SGRT-3-XX |







Dimensions are shown for reference purposes only. Specifications subject to change.

Dimensions are in millimeters unless otherwise specified.

USA: +1 800 522 6752
Asia Pacific: +86 0 400 820 6015
UK: +44 800 267 666

For additional support numbers please visit www.te.com

## SolderGrip Self-Fixturing Insulated Terminals (Continued)

**Table C. SolderGrip Wire Combinations** (see Table A for Terminal Size [-XX])
(Continued)

| Wire Combinations | Part No. | Wire Combinations | Part No. | Wire Combinations | Part No. |
|---|---|---|---|---|---|
| 3 # 14 + 1 # 16 | SGRT-4-XX | 2 # 16 + 4 # 20 | SGRT-3-XX | 1 # 18 + 1 # 20 + 2 # 22 | SGRT-2-XX |
| 3 # 14 + 2 # 16 | SGRT-4-XX | 2 # 16 + 1 # 18 | SGRT-3-XX | 1 # 18 + 2 # 20 | SGRT-2-XX |
| 3 # 14 + 3 # 16 | SGRT-4-XX | 2 # 16 + 1 # 18 + 1 # 20 | SGRT-3-XX | 1 # 18 + 3 # 20 | SGRT-2-XX |
| 4 # 14 | SGRT-4-XX | 2 # 16 + 1 # 18 + 2 # 20 | SGRT-3-XX | 1 # 18 + 4 # 20 | SGRT-3-XX |
| 4 # 14 + 1 # 16 | SGRT-4-XX | 2 # 16 + 1 # 18 + 3 # 20 | SGRT-3-XX | 1 # 18 + 5 # 20 | SGRT-3-XX |
| 4 # 14 + 2 # 16 | SGRT-4-XX | 2 # 16 + 2 # 18 | SGRT-3-XX | 2 # 18 | SGRT-2-XX |
| 5 # 14 | SGRT-4-XX | 2 # 16 + 2 # 18 + 1 # 20 | SGRT-3-XX | 2 # 18 + 1 # 22 | SGRT-2-XX |
| 5 # 14 + 1 # 16 | SGRT-4-XX | 2 # 16 + 2 # 18 + 2 # 20 | SGRT-3-XX | 2 # 18 + 1 # 20 | SGRT-2-XX |
| 1 # 16 | SGRT-2-XX | 2 # 16 + 3 # 18 | SGRT-3-XX | 2 # 18 + 2 # 20 | SGRT-3-XX |
| 1 # 16 + 1 # 22 | SGRT-2-XX | 2 # 16 + 3 # 18 + 1 # 20 | SGRT-3-XX | 2 # 18 + 3 # 20 | SGRT-3-XX |
| 1 # 16 + 2 # 22 | SGRT-2-XX | 2 # 16 + 4 # 18 | SGRT-3-XX | 2 # 18 + 4 # 20 | SGRT-3-XX |
| 1 # 16 + 3 # 22 | SGRT-2-XX | 3 # 16 | SGRT-3-XX | 3 # 18 | SGRT-2-XX |
| 1 # 16 + 1 # 20 | SGRT-2-XX | 3 # 16 + 1 # 20 | SGRT-3-XX | 3 # 18 + 1 # 20 | SGRT-3-XX |
| 1 # 16 + 1 # 20 + 1 # 22 | SGRT-2-XX | 3 # 16 + 2 # 20 | SGRT-3-XX | 3 # 18 + 2 # 20 | SGRT-3-XX |
| 1 # 16 + 2 # 20 | SGRT-2-XX | 3 # 16 + 3 # 20 | SGRT-3-XX | 3 # 18 + 3 # 20 | SGRT-3-XX |
| 1 # 16 + 3 # 20 | SGRT-3-XX | 3 # 16 + 1 # 18 | SGRT-3-XX | 4 # 18 | SGRT-3-XX |
| 1 # 16 + 4 # 20 | SGRT-3-XX | 3 # 16 + 1 # 18 + 1 # 20 | SGRT-3-XX | 4 # 18 + 1 # 20 | SGRT-3-XX |
| 1 # 16 + 5 # 20 | SGRT-3-XX | 3 # 16 + 1 # 18 + 2 # 20 | SGRT-3-XX | 4 # 18 + 2 # 20 | SGRT-3-XX |
| 1 # 16 + 1 # 18 | SGRT-2-XX | 3 # 16 + 2 # 18 | SGRT-3-XX | 5 # 18 | SGRT-3-XX |
| 1 # 16 + 1 # 18 + 1 # 20 | SGRT-2-XX | 3 # 16 + 2 # 18 + 1 # 20 | SGRT-3-XX | 5 # 18 + 1 # 20 | SGRT-3-XX |
| 1 # 16 + 1 # 18 + 2 # 20 | SGRT-3-XX | 3 # 16 + 3 # 18 | SGRT-3-XX | 6 # 18 | SGRT-3-XX |
| 1 # 16 + 1 # 18 + 3 # 20 | SGRT-3-XX | 4 # 16 | SGRT-3-XX | 1 # 20 + 2 # 22 | SGRT-2-XX |
| 1 # 16 + 1 # 18 + 4 # 20 | SGRT-3-XX | 4 # 16 + 1 # 20 | SGRT-3-XX | 1 # 20 + 3 # 22 | SGRT-2-XX |
| 1 # 16 + 2 # 18 | SGRT-3-XX | 4 # 16 + 2 # 20 | SGRT-3-XX | 1 # 20 + 4 # 22 | SGRT-2-XX |
| 1 # 16 + 2 # 18 + 1 # 20 | SGRT-3-XX | 4 # 16 + 1 # 18 | SGRT-3-XX | 2 # 20 | SGRT-2-XX |
| 1 # 16 + 2 # 18 + 2 # 20 | SGRT-3-XX | 4 # 16 + 1 # 18 + 1 # 20 | SGRT-3-XX | 2 # 20 + 1 # 22 | SGRT-2-XX |
| 1 # 16 + 2 # 18 + 3 # 20 | SGRT-3-XX | 4 # 16 + 2 # 18 | SGRT-4-XX | 2 # 20 + 2 # 22 | SGRT-2-XX |
| 1 # 16 + 3 # 18 | SGRT-3-XX | 5 # 16 | SGRT-3-XX | 2 # 20 + 3 # 22 | SGRT-2-XX |
| 1 # 16 + 3 # 18 + 1 # 20 | SGRT-3-XX | 5 # 16 + 1 # 20 | SGRT-4-XX | 3 # 20 | SGRT-2-XX |
| 1 # 16 + 3 # 18 + 2 # 20 | SGRT-3-XX | 5 # 16 + 1 # 18 | SGRT-4-XX | 3 # 20 + 1 # 22 | SGRT-2-XX |
| 1 # 16 + 4 # 18 | SGRT-3-XX | 6 # 16 | SGRT-4-XX | 4 # 20 | SGRT-2-XX |
| 1 # 16 + 4 # 18 + 1 # 20 | SGRT-3-XX | 1 # 18 + 1 # 22 | SGRT-2-XX | 5 # 20 | SGRT-3-XX |
| 1 # 16 + 5 # 18 | SGRT-3-XX | 1 # 18 + 2 # 22 | SGRT-2-XX | 6 # 20 | SGRT-3-XX |
| 2 # 16 | SGRT-2-XX | 1 # 18 + 3 # 22 | SGRT-2-XX | 4 # 22 | SGRT-2-XX |
| 2 # 16 + 1 # 20 | SGRT-3-XX | 1 # 18 + 1 # 20 | SGRT-2-XX | 5 # 22 | SGRT-2-XX |
| 2 # 16 + 2 # 20 | SGRT-3-XX | 1 # 18 + 1 # 20 + 1 # 22 | SGRT-2-XX | 6 # 22 | SGRT-2-XX |
| 2 # 16 + 3 # 20 | SGRT-3-XX | — | — | — | — |



Catalog 1654025
Revised 3-13

www.te.com

Dimensions are shown for reference purposes only. Specifications subject to change.

Dimensions are in millimeters unless otherwise specified.

USA: +1 800 522 6752
Asia Pacific: +86 0 400 820 6015
UK: +44 800 267 666

For additional support numbers please visit www.te.com

## SolderGrip Self-Fixturing Insulated Terminals (Continued)

### Installation

The SolderGrip product is pushed onto the conductors with a twisting motion. With the product in place, installation can be completed with the proper selection and use of heating tools and reflectors.

Either of the following TE heating tools is recommended:

- HL1901E/HL2010E
- CV-1981

Refer to TE installation procedure RPIP-820-01 for detailed instructions and recommended reflector attachments.

You will find ordering information for these tools in Section 10.

### Product Characteristics

| | |
|---|---|
| **Material** | |
| Insulation | Radiation-crosslinked, heat-shrinkable polyvinylidene fluoride (Kynar®) |
| Solder and flux | Sn60 Pb40 with RA flux |
| **Typical Performance** | |
| Tensile strength | Exceeds strength of individual wires |
| Temperature rating | -55°C to +150°C [-67°F to +302°F] |
| Voltage Drop | Not to exceed that of equivalent length of wire by more than 1 mV |
| Dielectric Withstanding Voltage | Current leakage less than 2 mA (1.5 kV) |

Kynar is a trademark of Arkema, Inc.





Catalog 1654025
Revised 3-13

www.te.com

Dimensions are shown for reference purposes only. Specifications subject to change.

Dimensions are in millimeters unless otherwise specified.

USA: +1 800 522 6752
Asia Pacific: +86 0 400 820 6015
UK: +44 800 267 666

For additional support numbers please visit www.te.com

## Introduction

TE SolderSleeve terminators offer easy, one-step solutions for wire connections to pins, posts, and tabs and for mass wire terminations.

Designed for applications with temperatures up to 150°C [302°F], the products in this section include SolderSleeve discrete wire terminators, which are heat-shrinkable thermoplastic sleeves containing a precisely engineered fluxed solder preform.

SolderSleeve terminators are also available on carrier tape, spaced precisely to match connector terminal spacing, enabling termination of an entire row of wires at one time.

SolderSleeve wire-to-pin, wire-to-post, and wire-to-tab terminators, like all TE termination products, provide reliability and economical installation for greater productivity. They can be supplied either in bulk or on carrier tape.



Dimensions are shown for reference purposes only. Specifications subject to change.

Dimensions are in millimeters unless otherwise specified.

USA: +1 800 522 6752
Asia Pacific: +86 0 400 820 6015
UK: +44 800 267 666

For additional support numbers please visit www.te.com

## SolderSleeve Discrete Wire Terminators

### Product Facts

- **Transparent polyvinylidene fluoride or polyolefin insulation sleeve provides encapsulation, inspectability, strain relief, and insulation**
- **Prefluxed solder preform offers a controlled soldering process**
- **One-piece design means easy installation and low installed cost**
- **Optional tape carrier provides convenience and ease of installation**
- **UL and CUL Recognized**

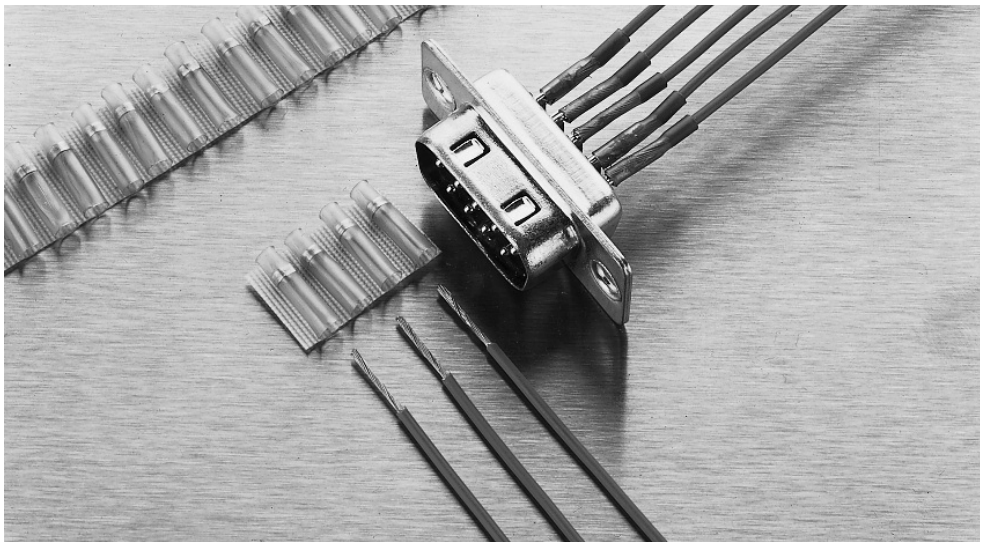

### Applications

Used for terminating wires to component terminals, such as motor tabs, connector pins, and switch terminals.

### Product selection process

1. Determine the application operating temperature.
2. From the Product Options table on the next page, select the product series appropriate for the application, based on the temperature required.
3. Determine your component connection point type (pin, post, or tab) and dimensions.
4. Determine your wire gauge.
5. Optional: Select tape carrier center-to-center spacing (D-71X series only). This should match center spacing of component terminals.
6. Select part number from the appropriate table:
   - For B-155 and CWT series (applications with low-temperature wires—below 125°C [257°F]), use Table A.
   - For D-129/141/71X series (applications with wires rated higher than 125°C [257°F]), use Table B.

### Installation

For proper installation of these devices, the correct heating tool and reflector attachment must be used. Either of the following TE heating tools is recommended:

- HL1901E/HL2010E
- AA-400 Super Heater

Refer to TE installation procedure RCPS-200-12 (for D-129, D-141, D-71X) or RPIP-824-00 (for B-155 and CWT) for detailed instructions and recommended reflector attachment.

You will find ordering information for these tools see section 10.



| Available in: | |
|---|---|
| Americas | ■ |
| Europe | ■ |
| Asia Pacific | ■ |



Catalog 1654025
Revised 3-13

www.te.com

Dimensions are shown for reference purposes only. Specifications subject to change.

Dimensions are in millimeters unless otherwise specified.

USA: +1 800 522 6752
Asia Pacific: +86 0 400 820 6015
UK: +44 800 267 666

For additional support numbers please visit www.te.com

## SolderSleeve Discrete Wire Terminators (Continued)

### Product Options

| Product Series | Max. Operating Temperature | Min. Wire Temperature Rating |
|---|---|---|
| B-155, CWT | 125°C [257°F] | 85°C [185°F] |
| D-129, D-141, D-71X | 150°C [302°F] | 125°C [257°F] |

**Note:** Cadmium-free option (B-152 series) is available for operating temperature of 125˚C [257˚F]. Consult TE for details.

### Table A. B-155 Series (125°C [257°F] rated)

| Connection-point Type and Size | Terminal Dimensions | Wire AWG/mm² | Part No. |
|---|---|---|---|
| 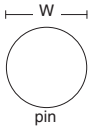  | W = up to 0.63 [.025] | 24 [0.24]<br>20 [0.61] | B-155-1501<br>B-155-1502 |
| | W = 0.63 [.025] to 0.89 [0.035] | 24 [0.24]<br>22 [0.38]<br>20 [0.61] | B-155-1501<br>B-155-1502<br>B-155-1503 |
| 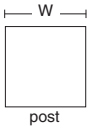  | W = 0.89 [0.035] to 1.14 [.045] | 24–22 [0.24–0.38]<br>20–18 [0.61–0.95] | B-155-1502<br>B-155-1503 |
| | W = 1.14 [.045] to 1.52 [.060] | 24–22 [0.24–0.38]<br>20–18 [0.61–0.95] | B-155-1503<br>B-155-1504 |
| 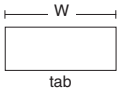  | W = up to1.52 [.060] | 24–20 [0.24–0.61] | B-155-1501 |
| | W = 1.27 [.050] to 2.28 [.090] | 24-18 [0.24–0.95] | B-155-1502 |
| | W = 1.77 [.070] to 2.79 [.110] | 24-18 [0.24–0.95] | B-155-1503 |
| | W = 2.54 [.100] to 3.80 [.150] | 24-18 [0.24–0.95] | B-155-1504 |
| | W = 2.28 [.090] to 4.70 [.187] | 22-16 [0.38–1.21] | B-155-1505 |



Dimensions are shown for reference purposes only. Specifications subject to change.

Dimensions are in millimeters unless otherwise specified.

USA: +1 800 522 6752
Asia Pacific: +86 0 400 820 6015
UK: +44 800 267 666

For additional support numbers please visit www.te.com

## SolderSleeve Discrete Wire Terminators (Continued)

### Table B. D-129/141/71X Series (up to 150°C [302°F] rated)

### Connection-point Type and Size

| Terminal Dimensions | | Wire AWG | Wire mm² | Tape Carrier Spacing of Sleeves (Center-to-Center) None | 1.27 [0.050] | 2.54 [0.100] | 3.17 [0.125] | 4.0 [0.156] |
|---|---|---|---|---|---|---|---|---|
| W, pin | W = up to 0.61 [.024] | 30–26 | [0.05–0.15] | D-141-30 | D-713-03 | — | — | — |
| | | 24–22 | [0.24–0.38] | D-141-07 | — | D-711-00 | — | — |
| | W = 0.63 [.025] to 0.81 [.032] | 20 | [0.61] | D-141-31 | — | D-711-04 | D-711-07 | D-711-08 |
| W, post | W = 0.76 [.030] to 1.27 [.050] | 24–20 | [0.24–0.61] | D-141-56 | — | — | — | — |
| | W = up to 1.52 [.060] | 24–20 | [0.24–0.61] | D-129-05 | — | D-714-01 | — | — |
| W, tab | W = 1.27 [.050] to 2.28 [.090] | 24–20 | [0.24–0.61] | D-129-03 | — | — | — | D-714-00 |
| | W = 2.28 [.090] to 3.55 [.140] | 24–20 | [0.24–0.61] | D-129-0043 | — | — | — | — |

### For Fine Wire Terminations 0.15 mm² (26 AWG) and Smaller*

| Part No.* | Inside Diameter As Supplied** | Fully Recovered† | Length†† |
|---|---|---|---|
| D-110-0062 | 1.0 [0.040] | 0.6 [0.025] | 16.0 [0.630] |
| D-110-0217 | 1.0 [0.040] | 0.6 [0.025] | 9.0 [0.360] |
| D-141-13 | 0.75 x 1.65 [0.030 X 0.065] | 0.75 [0.030] | 4.7 [0.185] |
| D-141-22 | 0.75 x 1.65 [0.030 X 0.065] | 0.75 [0.030] | 6.0 [0.240] |
| D-141-30 | 0.75 x 1.65 [0.030 X 0.065] | 0.75 [0.030] | 9.5 [0.375] |

**Note:** Micro SolderSleeve terminators are used for attaching leads smaller than 26 AWG (0.15 mm²) to terminals less than 0.6 [.025] wide.

*The D-110 series sleeves are primarily for single wire terminations and do not have a wire stop. The D-141 series will accept either one or two wires; the parts have a built-in wire stop that will locate the wire approximately 0.76 [0.03] from bottom of terminal.

**Minimum. Wire insulation must be smaller than this. When using the D-141 parts for two-wire terminations, the combined wire insulation diameters must be less than 1.5 [.060].

†Maximum. The combination of conductor diameter and terminal width and the wire insulation must be greater than this.

††The terminal length should be at least 1.2 [0.05] shorter than this. The wire strip length must be adjusted so that, when terminated, the exposed conductor is covered by the sleeve.







Dimensions are shown for reference purposes only. Specifications subject to change.

Dimensions are in millimeters unless otherwise specified.

USA: +1 800 522 6752
Asia Pacific: +86 0 400 820 6015
UK: +44 800 267 666

For additional support numbers please visit www.te.com

## SolderSleeve Discrete Wire Terminators (Continued)

### Product Characteristics

| Material | | |
|---|---|---|
| Insulation [D-129, D-141, D-71X] | Radiation-crosslinked, heat-shrinkable polyvinylidene fluoride | |
| Insulation [B-155, CWT] | Radiation-crosslinked, heat-shrinkable polyolefin | |
| Solder and flux [D-129, D-141, D-71X] | Solder: Sn63 Pb37 | Flux: ROL1 per ANSI-J-004 [RMA flux] |
| Solder and flux [B-155] | Solder: Sn42Bi58 | Flux: ROM1 per ANSI-J-004 [RA flux] |
| Solder and flux [CWT] | Solder: Sn50 Pb32 Cd 18 | Flux: ROM1 per ANSI-J-004 [RA flux] |
| **Typical Performance** | | |
| Voltage drop | 2.0 mV | |
| Tensile strength | Exceeds strength of conductor | |
| Dielectric strength | 2.0 kV | |
| Temperature rating [B-155, CWT] | -55°C to 125°C [-67°F to 257°F] | |
| Temperature rating [D-129, D-141, D-71X] | -55°C to 150°C [-67°F to 302°F] | |
| Insulation resistance | 1000 megohms | |

### Specifications/Approvals

| Series | Agency | TE |
|---|---|---|
| B-155 | RoHS | RT-1404 |
| CWT | UL and CUL E87681 | D-5023 |
| D-129, D-141 | UL and CUL E87681 | RT-1404 |

## Introduction

TE SolderSleeve shield grounding terminators provide an environmentally sealed, insulated, and encapsulated solder connection for a variety of applications. SolderSleeve terminators are available in many styles.

Designed for a wide variety of temperature applications ranging from -65°C to 200°C [-85°F to 392°F], the products in this section include:

- B-155-X and CWT-X SolderSleeve terminators, designed for low-temperature cables with operating temperatures up to 125°C [257°F] and suitable for most commercial environments.
- MIL-S-83519 SolderSleeve terminators, which are immersion resistant and available with or without a preinstalled ground lead.
- SO Series SolderSleeve terminators, which also are immersion resistant and feature the TE BiAlloy temperature indication system.
- S200 Shield terminators are offered in various sizes and ground lead configurations.

All SolderSleeve products are reliable, versatile, and easy to install, resulting in lower installed costs.





Catalog 1654025
Revised 3-13

www.te.com

Dimensions are shown for reference purposes only. Specifications subject to change.

Dimensions are in millimeters unless otherwise specified.

USA: +1 800 522 6752
Asia Pacific: +86 0 400 820 6015
UK: +44 800 267 666

For additional support numbers please visit www.te.com

## SolderSleeve Shield Terminators

### Product Facts

- **Transparent insulation sleeve provides encapsulation, inspectability, strain relief, and insulation**
- **Prefluxed solder preform provides a controlled soldering process**
- **One-piece design offers easy installation and lower installed cost**
- **Optional preinstalled ground leads provide convenience and ease of installation**

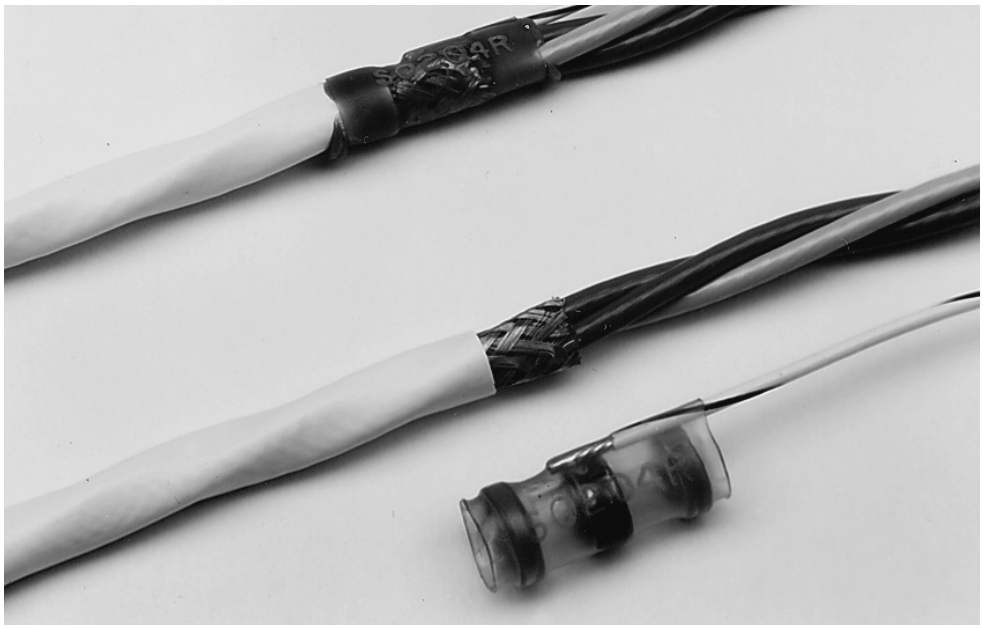

### Applications

Used for shield-to-ground termination.

### Product Selection Process

1. Select product series from the Product Options table below.
2. Determine cable dimensions.
3. Optional: Select preinstalled wire lead type (see Table G on page 8-49 for type descriptions).
4. Select part number (use the selection table indicated for your product series in the Product Options table below).
5. Refer to Table H on page 8-49 for cross-reference information.

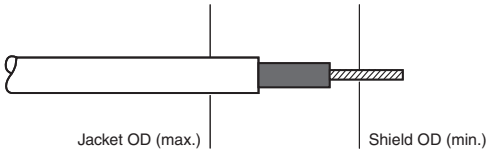


### Product Options (Refer to Table G on Page 8-49 for Additional Information)

| Product Series | System Oper. Temperature (Max.) | Used on Cables Rated (Min.) | Environmental Protection | Solder Alloy | Flux Type | Insulation Material | Part No. Selection Table |
|---|---|---|---|---|---|---|---|
| B-155 | 125°C [257°F] | 85°C [185°F] | Splash resistant | Bi58 | PA | Polyolefin | A |
| CWT | 125°C [257°F] | 85°C [185°F] | Splash resistant | Cd18 | RA | Polyolefin | A |
| SO63* | 150°C [302°F] | 125°C [257°F] | Immersion resistant | Sn63 | RMA | Polyvinylidene fluoride | B |
| S01/S02**, S03 | 150°C [302°F] | 125°C [257°F] | Immersion resistant | Sn63 | RMA | Polyvinylidene fluoride | C, D |
| SO96*** | 175°C [347°F] | 150°C [302°F] | Immersion resistant | Sn96 | RA | Polyvinylidene fluoride | E |
| SO175**** | 175˚C [347°F] | 150˚C [302°F] | Immersion resistant | Sn96 | RA | Polyvinylidene fluoride | F |
| S200**** | 200°C [392°F] | 150˚C [302°F] | Immersion resistant | Sn96 | RA | Fluoropolymer | G |

*Meets performance requirements of SAE-AS83519 (formerly MIL-S-83519) and NAS 1747, supplied with BiAlloy temperature indicator.
**Qualified to SAE-AS83519 (formerly MIL-S-83519), supplied with thermochromic temperature indicator.
***Meets performance requirements of SAE-AS83519 (formerly MIL-S-83519) and NAS 1747, supplied with thermochromic temperature indicator.
****Meets performance requirements of SAE-AS83519 (formerly MIL-S-83519), supplied with BiAlloy temperature indicator.
**Note:** Cadmium-free option (B-152 series) is available for operating temperature of 125˚C [257˚F]. Consult TE for details.

| Available in: | |
|---|---|
| Americas | ■ |
| Europe | ■ |
| Asia Pacific | ■ |



Dimensions are shown for reference purposes only. Specifications subject to change.

Dimensions are in millimeters unless otherwise specified.

USA: +1 800 522 6752
Asia Pacific: +86 0 400 820 6015
UK: +44 800 267 666

For additional support numbers please visit www.te.com

## SolderSleeve Shield Terminators (Continued)

### Table A. B-155 Series (125°C [257°F] rated)

| Cable OD | | Part Nos. | |
|---|---|---|---|
| Jacket OD Max. | Shield OD Min. | No Preinstalled Lead | With Preinstalled Lead (22AWG/0.38 mm² green) |
| 1.7 [.065] | 0.9 [.035] | B-155-3801 | — |
| 1.95 [.075] | 1.1 [.043] | B-155-3802 | — |
| 2.7 [.105] | 1.5 [.059] | B-155-3 | B-155-03-35-22-5 |
| 4.5 [.180] | 2.0 [.079] | B-155-5 | B-155-05-35-22-5 |
| 6.0 [.235] | 3.3 [.130] | B-155-6 | B-155-06-35-22-5 |
| 7.0 [.275] | 3.3 [.130] | B-155-7 | B-155-07-35-22-5 |
| 8.7 [.340] | 4.5 [.177] | B-155-9 | B-155-09-35-22-5 |
| 10.7 [.420] | 4.5 [.177] | B-155-11 | B-155-11-35-22-5 |
| 13.0 [.510] | 7.0 [.276] | B-155-13 | B-155-13-35-22-5 |

*See Table G on page 8-49 for lead description.
Note: The B-155 series is suitable for applications using low-temperature wires (typically rated at 85°C [185°F] to 125°C [257°F]) with bare copper or tin plating.

### Table B. SO63 Series

**BiAlloy Temperature Indication System**

This system greatly enhances the reliability and repeatability of SO63 series terminators while reducing installed cost. The heat-shrinkable thermoplastic sleeve contains a precisely engineered, fluxed solder band that is visible through the sleeve. The band provides exactly the amount of solder and flux required to terminate the ground lead to the cable shield. Encircling the band is a small temperature indicator ring. This ring melts only when the surfaces to be joined have reached the correct soldering temperature, thus ensuring a properly soldered connection. Process control is built into each sleeve.

| Cable OD | | Part Nos. | | | | | | |
|---|---|---|---|---|---|---|---|---|
| | | | Preinstalled Lead Option* | | | | Braid Strap | |
| Jacket OD Max. | Shield OD Min. | No Preinstalled Lead | 20 AWG | 22 AWG | 24 AWG | 26 AWG | Nickel Plated | Tin Plated |
| 1.95 [0.075] | 0.90 [.035] | SO63-1-00 | SO63-1-55-20-90 | SO63-1-55-22-90 | SO63-1-55-24-90 | SO63-1-55-26-90 | SO63-1-01 | SO63-1-9030 |
| 2.7 [0.105] | 1.40 [.055] | SO63-2-00 | SO63-2-55-20-90 | SO63-2-55-22-90 | SO63-2-55-24-90 | SO63-2-55-26-90 | SO63-2-01 | SO63-2-9030 |
| 4.3 [0.170] | 2.15 [.085] | SO63-3-00 | SO63-3-55-20-90 | SO63-3-55-22-90 | SO63-3-55-24-90 | SO63-3-55-26-90 | SO63-3-01 | SO63-3-9030 |
| 6.0 [0.235] | 3.30 [.130] | SO63-4-00 | SO63-4-55-20-90 | SO63-4-55-22-90 | SO63-4-55-24-90 | SO63-4-55-26-90 | SO63-4-01 | SO63-4-9030 |
| 7.0 [0.275] | 4.30 [.170] | SO63-5-00 | SO63-5-55-20-90 | SO63-5-55-22-90 | SO63-5-55-24-90 | SO63-5-55-26-90 | SO63-5-01 | SO63-5-9030 |

*See Table G on page 8-49 for lead description. Color of wire lead is denoted by the last two digits of the part number as follows:
90 = White with a black stripe 9 = White 0 = Black 6 = Blue (24 AWG only) 5 = Green (20, 22, 24 AWG)
The SO63 series is immersion resistant, features the TE BiAlloy temperature indication system, and meets the performance requirements of SAE-AS83519 (formerly MIL-S-83519) .







Dimensions are shown for reference purposes only. Specifications subject to change.
Dimensions are in millimeters unless otherwise specified.
USA: +1 800 522 6752
Asia Pacific: +86 0 400 820 6015
UK: +44 800 267 666
For additional support numbers please visit www.te.com

## SolderSleeve Shield Terminators (Continued)

### Table C. S01/S02 M83519 Series

**Thermochromic Temperature Indicator**

The M83519 (S01 and S02) series terminators contain a colored thermochromic temperature indicator that exhibits a distinct color change when surfaces have reached wetting temperature. This color change gives both manufacturing and Quality Control an aid in the inspection of the completed termination.

| Cable OD | | Part No. (MIL Part Number and TE Part No.) by Lead Option | | | | | |
|---|---|---|---|---|---|---|---|
| | | No Preinstalled Lead | | Preinstalled Lead Option* | | | |
| | | | | 20 AWG | | 22 AWG | |
| Jacket OD Max | Shield OD Min | MIL | TE | MIL | TE | MIL | TE |
| 1.95 [0.075] | 0.9 [.035] | M83519/1-1 | S01-01-R | M83519/2-1 | S02-01-R | M83519/2-6 | S02-06-R |
| 2.7[0.105] | 1.40 [.055] | M83519/1-2 | S01-02-R | M83519/2-2 | S02-02-R | M83519/2-7 | S02-07-R |
| 4.3 [0.170] | 2.15 [.085] | M83519/1-3 | S01-03-R | M83519/2-3 | S02-03-R | M83519/2-8 | S02-08-R |
| 6.0 [0.235] | 3.30 [.130] | M83519/1-4 | S01-04-R | M83519/2-4 | S02-04-R | M83519/2-9 | S02-09-R |
| 7.0 [0.275] | 4.30 [.170] | M83519/1-5 | S01-05-R | M83519/2-5 | S02-05-R | M83519/2-10 | S02-10-R |
| Jacket OD Max. | Shield OD Min. | | | Preinstalled Lead Option* | | | |
| | | | | 24 AWG | | 26 AWG | |
| 1.95 [0.075] | 0.9 [.035] | | | M83519/2-11 | S02-11-R | M83519/2-16 | S02-16-R |
| 2.7 [0.105] | 1.40 [.055] | | | M83519/2-12 | S02-12-R | M83519/2-17 | S02-17-R |
| 4.3[0.170] | 2.15 [.085] | | | M83519/2-13 | S02-13-R | M83519/2-18 | S02-18-R |
| 6.0 [0.235] | 3.30 [.130] | | | M83519/2-14 | S02-14-R | M83519/2-19 | S02-19-R |
| 7.0 [0.275] | 4.30 [.170] | | | M83519/2-15 | S02-15-R | M83519/2-20 | S02-20-R |

*See Table G for lead description.
M83519 is the qualified product listed in SAE-AS83519 (formerly MIL-S-83519) . The series features a thermochromic temperature indicator to assist in termination and inspection. The part number is permanently marked on the sleeve.

### Table D. S03 Series

**Thermochromic Temperature Indicator**

The S03 series terminators contain a colored thermochromic temperature indicator that exhibits a distinct color change when surfaces have reached wetting temperature. This color change gives both Manufacturing and Quality Control an aid in the inspection of the completed termination.

| Cable OD | | Part No. | |
|---|---|---|---|
| | | Preinstalled Lead Option* | |
| Jacket OD Max. | Shield OD Min. | Tin plated Braid Strap | Nickel plated Braid Strap |
| 1.95 [0.075] | 0.9 [.035] | S03-01-R | S03-06-R |
| 2.7 [0.105] | 1.40 [.055] | S03-02-R | S03-07-R |
| 4.3 [0.170] | 2.15 [.085] | S03-03-R | S03-08-R |
| 6.0 [0.235] | 3.30 [.130] | S03-04-R | S03-09-R |
| 7.0 [0.275] | 4.30 [.170] | S03-05-R | S03-10-R |

*See Table G for lead description.



Dimensions are shown for reference purposes only. Specifications subject to change.

Dimensions are in millimeters unless otherwise specified.

USA: +1 800 522 6752
Asia Pacific: +86 0 400 820 6015
UK: +44 800 267 666

For additional support numbers please visit www.te.com

## SolderSleeve Shield Terminators (Continued)

### Table E. SO96 Series (175°C [347°F] rated)

**Thermochromic Temperature Indicator**

The SO96 series terminators contain a colored thermochromic temperature indicator that exhibits a distinct color change when surfaces have reached wetting temperature. This color change gives both manufacturing and Quality Control an aid in the inspection of the completed termination.

| Cable OD | | Part No. | | |
|---|---|---|---|---|
| Jacket OD Max. | Shield OD Min. | No Preinstalled Lead | Preinstalled Lead Option* | |
| | | | 22 AWG | Braid Strap |
| 1.95 [0.075] | 0.9 [.035] | SO96-1-00 | SO96-1-55-22-90 | SO96-1-01 |
| 2.7 [0.105] | 1.40 [.055] | SO96-2-00 | SO96-2-55-22-90 | SO96-2-01 |
| 4.3 [0.170] | 2.15 [.085] | SO96-3-00 | SO96-3-55-22-90 | SO96-3-01 |
| 6.0 [0.235] | 3.30 [.130] | SO96-4-00 | SO96-4-55-22-90 | SO96-4-01 |
| 7.0 [0.275] | 4.30 [.170] | SO96-5-00 | SO96-5-55-22-90 | SO96-5-01 |

*See Table G for lead description.
The SO96 series is designed for high-temperature applications with operating temperature requirements up to 200°C [392°F]. This series features a thermochromic temperature indicator and meets performance requirements of SAE-AS83519 (formerly MIL-S-83519) . The solder is Sn96 with RA flux compatible with nickel-plated shields.

### Table F. SO175 Series (175°C [347°F] rated)

**BiAlloy Temperature Indication System**

This system greatly enhances the reliability and repeatability of SO175 series terminators while reducing installed cost. The temperature indicator ring, encircling the solder preform, melts to indicate the very minimum amount of heat.

| Cable OD | | Part No. | | |
|---|---|---|---|---|
| Jacket OD Max. | Shield OD Min. | No Preinstalled Lead | Preinstalled Lead Option* | |
| | | | 22 AWG | Braid Strap |
| 1.95 [0.075] | 0.90 [0.035] | SO175-1-00 | SO175-1-55-22-90 | SO175-1-01 |
| 2.7 [0.105] | 1.40 [0.055] | SO175-2-00 | SO175-2-55-22-90 | SO175-2-01 |
| 4.3 [0.170] | 2.15 [0.085] | SO175-3-00 | SO175-3-55-22-90 | SO175-3-01 |
| 6.0 [0.235] | 3.30 [0.130] | SO175-4-00 | SO175-4-55-22-90 | SO175-4-01 |
| 7.0 [0.275] | 4.30 [0.170] | SO175-5-00 | SO175-5-55-22-90 | SO175-5-01 |

*See Table H for lead description.

### Table G. S200 Series (200°C [392°F] rated)

**BiAlloy Temperature Indication System**

This system greatly enhances the reliability and repeatability of S200 series terminators while reducing installed cost. The temperature indicator ring, encircling the solder preform, melts to indicate the very minimum amount of heat.

| Cable OD | | Part No. | | |
|---|---|---|---|---|
| Jacket OD Max. | Shield OD Min. | No Preinstalled Lead | Preinstalled Lead Option* | |
| | | | 22 AWG | Braid Strap |
| 1.95 [0.075] | 0.90 [0.035] | S200-1-00 | S200-1-WI-22-9 | S200-1-01 |
| 2.7 [0.105] | 1.40 [0.055] | S200-2-00 | S200-2-WI-22-9 | S200-2-01 |
| 4.3 [0.170] | 2.15 [0.085] | S200-3-00 | S200-3-WI-22-9 | S200-3-01 |
| 6.0 [0.235] | 3.30 [0.130] | S200-4-00 | S200-4-WI-22-9 | S200-4-01 |
| 7.0 [0.275] | 4.30 [0.170] | S200-5-00 | S200-5-WI-22-9 | S200-5-01 |

*See Table H for lead description.

### Table H. Preinstalled Lead Description

| Series | Lead Type | Remarks | Plating | Stranding | Min. Length |
|---|---|---|---|---|---|
| S200 | M22759/91 | MIL-W-22759/91 | Silver | Stranded | 150 (6.00) |
| M83519, SO63 | 55A0111 | MIL-W-22759/32 | Tin | Stranded | 150 [6.00] |
| SO96, SO175 | 55A0813 | MIL-W-22759/41 | Nickel | Stranded | 150 [6.00] |
| SO63, SO96, S03 | Braid strap | Uninsulated | Nickel | 40 x 38 AWG | 150 [6.00] |
| B-155 | XL polyethylene | RoHS | Tin | Stranded (W2) | 150 [6.00] |
| CWT | XL polyethylene | UL Listed | Tin | Stranded (W1) | 150 [6.00] |
| SO63, S03 | Braid Strap | Uninsulated | Tin | Stranded | 150 [6.00] |





Catalog 1654025
Revised 3-13
www.te.com

Dimensions are shown for reference purposes only. Specifications subject to change.
Dimensions are in millimeters unless otherwise specified.
USA: +1 800 522 6752
Asia Pacific: +86 0 400 820 6015
UK: +44 800 267 666
For additional support numbers please visit www.te.com

## SolderSleeve Shield Terminators (Continued)

### Product Characteristics

| Material | | |
|---|---|---|
| **Insulation** | | |
| S200 | Radiation-crosslinked, heat-shrinkable, modified fluoropolymer | |
| SO, M83519 | Radiation-crosslinked, heat-shrinkable polyvinylidene fluoride | |
| B-155 | Radiation-crosslinked, heat-shrinkable polyolefin | |
| **Solder and flux** | | |
| SO63, M83519, S03 | Solder: Sn63 Pb37 | Flux: ROL1 per ANSI - J - 004 (RMA Flux) |
| S200, SO96, SO175 series | Solder: Sn96 Ag4 | Flux: ROM1 per ANSI - J - 004 (RA Flux) |
| B-155 | Solder: SN42Bi58 | Flux: ROM1 per ANSI - J - 004 (RA Flux) |
| **Ground lead** | | |
| B-155 series | XL polyethylene | |
| S200 series | MIL-C-22759/91 or /87 | |
| SO, M83519, SO175 | MIL-W-22759/32 or /41 | |
| **Typical Performance** | | |
| Voltage drop | 2.5 mV | |
| Tensile strength | Exceeds strength of ground lead | |
| Dielectric strength | 1.0 kV immersed | |
| Temperature rating | | |
| B-155 | -55°C to 125°C [-67°F to 257°F] | |
| SO63/M83519/S03 | -55°C to 150°C [-67°F to 302°F] | |
| SO96/SO175 series | -55°C to 175°C [-67°F to 347°F] | |
| S200 | -55°C to 200°C [-67°F to 392°F] | |
| Insulation resistance | 1000 megohms | |

### Specifications/Approvals

| Series | Agency | TE |
|---|---|---|
| B-155 | — | RT-1404 |
| SO63* | NAS 1747 | RT-1404 |
| M83519** | MIL-S-83519/1&/2 | RT-1404 |
| SO96*** | NAS 1747 | RT-1404 |
| SO175 | | RT-1404 |
| S200 | — | RT-1404 |

* Meets performance requirements of SAE-AS83519 (formerly MIL-S-83519) and NAS 1747, supplied with BiAlloy temperature indicator.
** Qualified to SAE-AS83519 (formerly MIL-S-83519), supplied with thermochromic temperature indicator.
***Meets performance requirements of SAE-AS83519 (formerly MIL-S-83519) and NAS 1747, supplied with thermochromic temperature indicator.

### Installation

For proper installation of these devices, the correct heating tool and reflector attachment must be used. Any one of the following TE heating tools is recommended:

- HL1901E/HL2010E
- AA-400 Super Heater
- CV-1981
- MiniRay
- IR-1759

For detailed instructions and recommended reflector attachments, refer to the appropriate TE installation procedure:

| Series | Procedure |
|---|---|
| **B-155** | **RPIP-824-000** |
| **CWT** | **RPIP-655-00-D** |
| **SO63** | **RCPS-100-70** |
| **M83519 (S01/S02)** | **RCPS-100-70** |
| **SO96** | **RCPS-100-70** |
| **S03** | **RCPS-100-70** |
| **SO175** | **RCPS-100-70** |
| **S200** | **RCPS-100-71** |

You will find ordering information for these tools in section 10.

## SolderSleeve Shield Terminators (Continued)

### Table H. NAS, M83519, and TE Cross-Reference

| NAS Part No. | TE D Series Part No. | NAS Comment |
|---|---|---|
| 1744-1 | D-1744-01 | |
| 1744-2 | D-1744-02 | |
| 1744-3 | D-1744-03 | |
| 1744-4 | D-1744-04 | |
| 1744-5 | D-1744-05 | |
| 1744-6 | D-1744-06 | |
| 1744-7 | D-1744-07 | |
| 1744-8 | D-1744-08 | |
| 1745-1 | D-144-25 | Inactive, Use SAE-AS83519/1-1 (formerly MIL-S-83519) |
| 1745-2 | D-100-00 | Inactive, Use SAE-AS83519/1-2 (formerly MIL-S-83519) |
| 1745-3 | D-101-00 | Inactive, Use SAE-AS83519/1-3 (formerly MIL-S-83519) |
| 1745-4 | D-103-00 | Inactive, Use SAE-AS83519/1-5 (formerly MIL-S-83519) |
| 1745-5 | D-144-26 | |
| 1745-6 | D-100-31 | |
| 1745-7 | D-101-31 | |
| 1745-8 | D-103-31 | |
| 1745-9 | | Obsolete - Use NAS1745-13 |
| 1745-10 | | Obsolete - Use NAS1745-14 |
| 1745-11 | | Obsolete - Use NAS1745-15 |
| 1745-12 | | Obsolete - Use NAS1745-16 |
| 1745-13 | D-142-83 | Inactive, Use SAE-AS83519/1-1 (formerly MIL-S-83519) |
| 1745-14 | D-142-50 | Inactive, Use SAE-AS83519/1-2(formerly MIL-S-83519) |
| 1745-15 | D-142-51 | Inactive, Use SAE-AS83519/1-3 (formerly MIL-S-83519) |
| 1745-16 | D-142-52 | Inactive, Use SAE-AS83519/1-5 (formerly MIL-S-83519) |
| 1745-17 | D-107-00 | Inactive, Use SAE-AS83519/1-4 (formerly MIL-S-83519) |
| 1745-18 | D-104-00 | |
| 1745-19 | D-105-00 | |
| 1745-20 | D-107-31 | |
| 1745-21 | D-104-31 | |
| 1745-22 | D-105-31 | |
| 1745-23 | D-142-56 | Inactive, Use SAE-AS83519/1-4 (formerly MIL-S-83519) |
| 1745-24 | D-142-65 | |
| 1745-25 | D-142-66 | |
| 1746-1 | D-144-25 | Inactive, Use SAE-AS83519/1-1 (formerly MIL-S-83519) |
| 1746-2 | D-144-00 | Inactive, Use SAE-AS83519/1-2 (formerly MIL-S-83519) |
| 1746-3 | D-144-01 | Inactive, Use SAE-AS83519/1-3 (formerly MIL-S-83519) |
| 1746-4 | D-144-02 | Inactive, Use SAE-AS83519/1-5 (formerly MIL-S-83519) |
| 1746-5 | D-144-26 | |
| 1746-6 | D-144-03 | |
| 1746-7 | D-144-04 | |
| 1746-8 | D-144-05 | |
| 1746-9 | D-144-46 | Inactive, Use SAE-AS83519/1-4 (formerly MIL-S-83519) |
| 1746-10 | D-144-37 | |

| Military Part No. | TE S01/S02 Series* Part No. | TE SO63 Series** Part No. |
|---|---|---|
| M83519/1-1 | S01-01-R | SO63-1-00 |
| M83519/1-2 | S01-02-R | SO63-2-00 |
| M83519/1-3 | S01-03-R | SO63-3-00 |
| M83519/1-4 | S01-04-R | SO63-4-00 |
| M83519/1-5 | S01-05-R | SO63-5-00 |
| M83519/2-1 | S02-01-R | SO63-1-55-20-90 |
| M83519/2-2 | S02-02-R | SO63-2-55-20-90 |
| M83519/2-3 | S02-03-R | SO63-3-55-20-90 |
| M83519/2-4 | S02-04-R | SO63-4-55-20-90 |
| M83519/2-5 | S02-05-R | SO63-5-55-20-90 |
| M83519/2-6 | S02-06-R | SO63-1-55-22-90 |
| M83519/2-7 | S02-07-R | SO63-2-55-22-90 |
| M83519/2-8 | S02-08-R | SO63-3-55-22-90 |
| M83519/2-9 | S02-09-R | SO63-4-55-22-90 |
| M83519/2-10 | S02-10-R | SO63-5-55-22-90 |
| M83519/2-11 | S02-11-R | SO63-1-55-24-90 |
| M83519/2-12 | S02-12-R | SO63-2-55-24-90 |
| M83519/2-13 | S02-13-R | SO63-3-55-24-90 |
| M83519/2-14 | S02-14-R | SO63-4-55-24-90 |
| M83519/2-15 | S02-15-R | SO63-5-55-24-90 |
| M83519/2-16 | S02-16-R | SO63-1-55-26-90 |
| M83519/2-17 | S02-17-R | SO63-2-55-26-90 |
| M83519/2-18 | S02-18-R | SO63-3-55-26-90 |
| M83519/2-19 | S02-19-R | SO63-4-55-26-90 |
| M83519/2-20 | S02-20-R | SO63-5-55-26-90 |

* QPL listed to SAE-AS83519 (formerly MIL-S-83519)
** Meets performance requirements of SAE-AS83519 (formerly MIL-S-83519)

## Introduction

TE SolderSleeve coaxial cable terminators allow reliable, easy terminations in a variety of coaxial cable applications, including printed circuit boards (PCBs). The insulating and strain-relieving capabilities of SolderSleeve terminators provide the ideal solution to center-conductor breakage problems.

Designed for applications with temperatures up to 150°C [302°F], the products in this section include:

- SolderSleeve coaxial cable terminators, which allow reliable, economical attachment of coaxial cable to connector terminals, printed wiring assemblies, or solderless wrap terminals.
- One-piece SolderSleeve PCB coaxial cable terminators, which permit quick, easy, and cost-effective terminations of coaxial cable to printed circuit boards.
- RF one-step BNC/TNC connectors, which are single-piece assemblies for terminating the center conductor and the braid of a broad range of coaxial cables. They are fully intermateable with MIL-C-39012C connectors and are available in 50-ohm and 75-ohm versions (refer to pages 8-57 to 8-62 for product information).

With precisely measured solder and flux, SolderSleeve products provide exact process control of terminations. The SolderSleeve method means strong connections with the lowest possible voltage drop. Small, lightweight SolderSleeve terminators are also the ideal solution for high-density packaging problems.

## SolderSleeve Coaxial Cable Terminators

### Product Facts

- **Transparent polyvinylidene fluoride or polyolefin insulation sleeve provides encapsulation, inspectability, strain relief (eliminates center conductor breakage), and insulation.**
- **Prefluxed solder preform provides a controlled soldering process**
- **One-piece design provides easy installation and lower installed cost**
- **Preinstalled termination leads provide convenience and ease of installation**

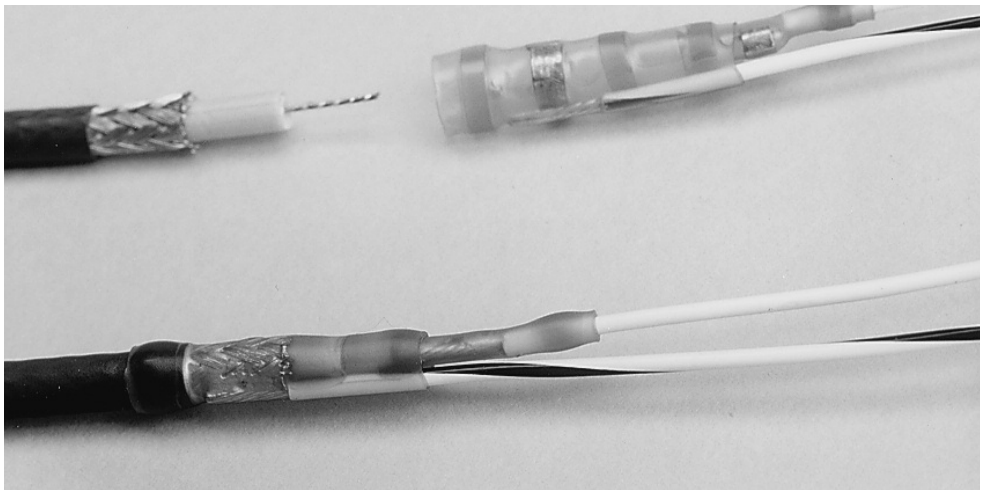

### Applications

Used for terminating coaxial cable to component terminals, contacts, printed circuit boards, and solderless wrap terminals.

### Product Selection Process

1. Select product series from the product options table below.
2. Select preinstalled lead type from the table below.
3. Determine cable RG number or dimensions.
4. Select part number from Table A (B-155, CWT series) or Table B (B-02X/B-04X series) on the next page.

### Product Options

| Product Series | Max. Operating Temp. | Use on Cables Rated (Min) | Cable Shield Plating | Part No. Selection Table | Design |
|---|---|---|---|---|---|
| B-155, CWT | 125°C [257°F] | 85°C [185°F] | Tin, copper | A | 2-pc. |
| B-02X/B-04X | 150°C [302°F] | 125°C [257°F] | Tin, silver | B | 1-pc. |
| D-181 | 150°C [302°F] | 125°C [257°F] | Tin, silver | C | 2-pc. |
| D-184 | 125°C [257°F] | 85°C [185°F] | Tin | D | 2-pc. |

### Preinstalled Lead Descriptions

| Series | Lead Type | Plating | Stranding | AWG | Length | Color |
|---|---|---|---|---|---|---|
| B-155, CWT | XL polyethelene | Tin | Stranded (W1) | 22 | 150 [6.000] | White (cntr), green (grnd) |
| B-021 | M81822/13 (solderless wrap) | Silver | Solid-OFHC | 24—30 | 150 [6.000] | White (cntr), blue (grnd) |
| B-041 | M81822/13 (solderless wrap) | Silver | Solid-OFHC | 24—30 | 150 [6.000] | White (cntr), blue (grnd) |
| B-043 | M81822/13 (solderless wrap) | Silver | Solid-OFHC | 24—30 | 150 [6.000] | White (cntr), blue (grnd) |
| B-020 | 55A0111 (MIL-W-22759/32) | Tin | Stranded | 20—30 | 150 [6.000] | White (cntr), blue (grnd) |
| B-040 | 55A0111 (MIL-W-22759/32) | Tin | Stranded | 20—30 | 150 [6.000] | White (cntr), blue (grnd) |
| B-044 | 55A0111 (MIL-W-22759/32) | Tin | Stranded | 20—30 | 150 [6.000] | White (cntr), blue (grnd) |
| D-181-12XX | 55A0111 (MIL-W-22759/32) | Tin | Stranded | 20—30 | 150 [6.000] | White (cntr), white w/black stripe (grnd) |
| D-181-22XX | 55A0111 (MIL-W-22759/32) | Tin | Stranded | 20—30 | 150 [6.000] | White (cntr), white w/black stripe (grnd) |
| D-181-32XX | 55A0111 (MIL-W-22759/32) | Tin | Stranded | 20—30 | 150 [6.000] | White (cntr), white w/black stripe (grnd) |
| D-181-18XX | M81822/13 | Silver | Solid | 26 – 30 | 150 [6.000] | White (cntr), blue (grnd) |
| D-181-28XX | M81822/13 | Silver | Solid | 26 – 30 | 150 [6.000] | White (cntr), blue (grnd) |
| D-184 | 55A0111 (MIL-W-22759/32) | Tin | Stranded | 20 – 26 | 150 [6.000] | White (cntr), white w/black stripe (grnd) |

### Product Characteristics

| | | |
|---|---|---|
| **Material** | | |
| Insulation (B-02X/B-04X, D-181, D-184) | Radiation-crosslinked, heat-shrinkable polyvinylidene fluoride | |
| Insulation (B-155, CWT series) | Radiation-crosslinked, heat-shrinkable polyolefin | |
| Solder and flux (B-02X/B-04X, D-181) | Solder: Sn63 Pb37 | Flux: ROL1 per ANSI-J-004 (RMA Flux) |
| Solder and flux (CWT series, D-184) | Solder: Sn50 Pb32 Cd18 | Flux: ROM1 per ANSI-J-004 (RA Flux) |
| Solder and flux (B-155) | Solder: Sn42Bi58 | Flux: ROM1 per ANSI-J-004 (RA Flux) |
| **Typical Performance** | | |
| Voltage drop | 2.0 mV | |
| Tensile strength | Exceeds strength of conductor | |
| Dielectric strength | 2.0 kV | |
| Temperature rating (B-155, CWT, D-184) | -55°C to 125°C [-67°F to 257°F] | |
| Temperature rating (B-02X/B-04X, D-181) | -55°C to 150°C [-67°F to 302°F] | |
| Insulation resistance | 1000 megohms | |

| Available in: | |
|---|---|
| Americas | ■ |
| Europe | ■ |
| Asia Pacific | ■ |





Catalog 1654025
Revised 3-13

www.te.com

Dimensions are shown for reference purposes only. Specifications subject to change.

Dimensions are in millimeters unless otherwise specified.

USA: +1 800 522 6752
Asia Pacific: +86 0 400 820 6015
UK: +44 800 267 666

For additional support numbers please visit www.te.com

## SolderSleeve Coaxial Cable Terminators (Continued)

### Table A. B-155 Series Part Numbers

| Cable RG Number | Dimensions | | Part No. With Preinstalled Lead AWG/0.38 mm² Green/White) |
|---|---|---|---|
| | Dielectric OD | Jacket OD | |
| 174 | 0.80–2.30 [.032–.091] | 1.30–2.80 [.051–.110] | CWT-4174-W122-5/9 |
| 58, 122 | 2.00–2.80 [.079–.110] | 2.50–4.40 [.100–.173] | CWT-4058-W122-5/9 |
| 59 | 2.80–3.30 [.110–.130] | 3.20–6.00 [.125–.235] | CWT-4059-W122-5/9 |

### Table B. B-02X/B-04X Series Part Numbers

**Part 1: Coaxial Product Group Selection**

| Typical Compatible Part No. | | Dimension Range | | | | |
|---|---|---|---|---|---|---|
| RG Cable Number | TE Cable Description | Jacket OD (Max.) | Shield OD | Dielectric OD | Conductor OD | One-Piece Coaxial Product Group |
| RG178, RG404 | 5030A13XX<br>5028A13XX | 3.40<br>[.134] | 1.30–2.30<br>[.051–.091] | 0.50–1.70<br>[.019–.067] | 0.30–0.80<br>[.011–.032] | Group 1 |
| RG179, RG316 | 5024A13XX<br>7530A13XX<br>7526A13XX<br>9530A13XX | 4.40<br>[.173] | 1.50–2.80<br>[.060–.110] | 1.20–2.50<br>[.047–.100] | 0.30–1.60<br>[.011–.063] | Group 2 |
| RG180, RG302, RG303 | 9527A13XX<br>9528A13XX | 6.30<br>[.248] | 2.40–4.60<br>[.094–.181] | 1.40–4.30<br>[.055–.169] | 0.30–2.80<br>[.011–.110] | Group 3 |

**Part 2: Product Part Number Selection**

| One-Piece Coaxial Product Group | Preinstalled Wire Type | Preinstalled Wire Size | | | | | |
|---|---|---|---|---|---|---|---|
| | | 20 AWG | 22 AWG | 24 AWG | 26 AWG | 28 AWG | 30 AWG |
| Group 1 | Stranded (M22759) | — | B-044-22-N | B-044-24-N | B-044-26-N | — | — |
| | Solid (M81822) | — | — | B-043-24-N | B-043-26-N | B-043-28-N | B-043-30-N |
| Group 2 | Stranded (M22759) | B-040-20-N | B-040-22-N | B-040-24-N | B-040-26-N | B-040-28-N | B-040-30-N |
| | Solid (M81822) | — | — | B-041-24-N | B-041-26-N | B-041-28-N | B-041-30-N |
| Group 3 | Stranded (M22759) | B-020-20-N | B-020-22-N | B-020-24-N | B-020-26-N | — | — |
| | Solid (M81822) | — | — | — | B-021-26-N | — | — |

1. The B-02X/B-04X series uses a one-piece design to terminate coaxial cables rated at 125°C minimum.
2. Using Part 1 of this table, select the appropriate coaxial product group (1, 2, or 3) based on your RG cable number, TE cable description, or cable dimensions.
3. Using Part 2 of this table, select the product part number based on the coaxial product group you selected in Part 1 and the appropriate preinstalled lead type you selected on the previous page.

### Table C. D-181 Series Part Numbers

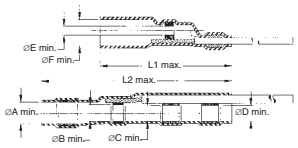


| Product Name | Product Dimensions | | | | | | | | Wire AWG |
|---|---|---|---|---|---|---|---|---|---|
| | A min. | B min. | C min. | D min. | E min. | F min. | L1 max. | L2 max. | |
| D-181-1220-90/9 | | | | | | | | | 20 |
| D-181-1222-90/9 | | | | | | | | | 22 |
| D-181-1224-90/9 | 3.7 | 3.2 | 2.7 | 2.4 | 0.71 | 2.3 | 17 | 21.5 | 24 |
| D-181-1226-90/9 | [0.145] | [0.125] | [0.105] | [0.095] | [0.028] | [0.09] | [0.67] | [0.85] | 26 |
| D-181-1826-6/9 | | | | | | | | | 26 |
| D-181-1830-6/9 | | | | | | | | | 30 |
| D-181-2220-90/9 | | | | | | | | | 20 |
| D-181-2222-90/9 | | | | | | | | | 22 |
| D-181-2224-90/9 | 4.5 | 4 | 3.45 | 2.9 | 1.1 | 3 | 17 | 22.7 | 24 |
| D-181-2226-90/9 | [0.18] | [0.16] | [0.135] | [0.115] | [0.045] | [0.12] | [0.67] | [0.895] | 26 |
| D-181-2826-6/9 | | | | | | | | | 26 |
| D-181-2830-6/9 | | | | | | | | | 30 |
| D-181-3220-90/9 | | | | | | | | | 20 |
| D-181-3222-90/9 | | | | | | | | ] | 22 |
| D-181-3224-90/9 | 5.2 | 4.7 | 4.45 | 3.95 | 1.3 | 4 | 17 | 21.5 | 24 |
| D-181-3226-90/9 | [0.205] | [0.185] | [0.175] | [0.155] | [0.055] | [0.16] | [0.67] | [0.85] | 26 |
| D-181-3826-6/9 | | | | | | | | | 26 |
| D-181-3830-6/9 | | | | | | | | | 30 |

### Table D. D-184 Series Part Numbers

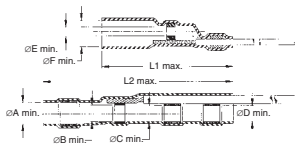


| Product Name | Product Dimensions | | | | | | | | Wire AWG |
|---|---|---|---|---|---|---|---|---|---|
| | ØA min. | ØB min. | ØC min. | ØD min. | ØE min. | ØF min. | L1 max. | L2 max. | |
| D-184-1220-90/9 | | | | | | | | | 20 |
| D-184-1222-90/9 | 3.7 | 3.2 | 2.7 | 2.4 | 0.71 | 2.3 | 17 | 21.5 | 22 |
| D-184-1224-90/9 | [0.145] | [0.125] | [0.105] | [0.095] | [0.028] | [0.09] | [0.67] | [0.85] | 24 |
| D-184-1226-90/9 | | | | | | | | | 26 |
| D-184-2220-90/9 | | | | | | | | | 20 |
| D-184-2222-90/9 | 4.5 | 4 | 3.45 | 2.9 | 1.1 | 3 | 17 | 22.7 | 22 |
| D-184-2224-90/9 | [0.18] | [0.16] | [0.135] | [0.115] | [0.045] | [0.12] | [0.67] | [0.895] | 24 |
| D-184-2226-90/9 | | | | | | | | | 26 |



Catalog 1654025
Revised 3-13

www.te.com

Dimensions are shown for reference purposes only. Specifications subject to change.

Dimensions are in millimeters unless otherwise specified.

USA: +1 800 522 6752
Asia Pacific: +86 0 400 820 6015
UK: +44 800 267 666

For additional support numbers please visit www.te.com

## SolderSleeve PCB/Coaxial Cable Terminators

### Product Facts

- **Provides a completely shielded, low-resistance, matched-impedance termination with very low VSWR (D-607 series only)**
- **Transparent polyvinylidene fluoride insulation sleeve provides encapsulation, inspectability, strain relief, and insulation**
- **Prefluxed solder preform provides a controlled soldering process**
- **One-piece design offers easy installation and lower installed cost**
- **Preinstalled PCB termination body provides convenience and ease of installation**

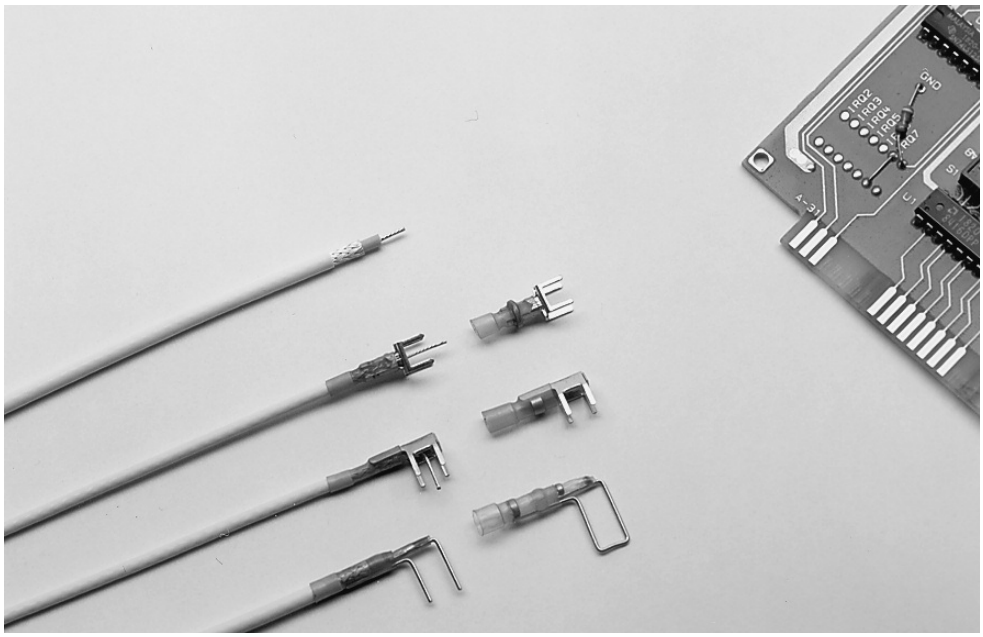

### Applications

Used for terminating coaxial cable to printed circuit boards.

### Installation

For proper installation of these devices, the correct heating tool and reflector attachment must be used. Any one of the following TE heating tools is recommended:

- HL1910E/HL2010E
- AA-400 Super Heater
- IR-1759 MiniRay
- CV-1981

Refer to TE installation procedure ES-61139 for detailed instructions and recommended reflector attachments.

You will find ordering information for these tools in Section 10.

### Product Selection Process

1. Select product series from the Product Options table below.
2. Determine cable RG number or outside diameter dimensions.
3. Select the appropriate part number from Table A (D-607 series) or Table B (B-046 series).

- For D-607 (matched impedance) series, determine straight or right-angle entry to PCB and grid pattern, then select the appropriate part number from Table A on the next page.
- For B-046 (PinPak, or pin to ground) series, determine hole spacing and diameter. Refer to Table B for product selection (see illustration below for cable dimensions).

| Available in: | |
|---|---|
| Americas | ■ |
| Europe | ■ |
| Asia Pacific | ■ |

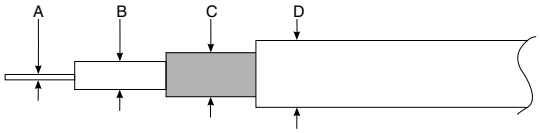


### Product Options

| Product Series | Typical Application Performance | Shield Method | Part No. Selection Table |
|---|---|---|---|
| D-607 | Matched impedance up to 2.3 GHz | Metal body | A |
| B-046 | Effective transmission up to 100 MHz | Pin to ground | B |





Catalog 1654025
Revised 3-13

www.te.com

Dimensions are shown for reference purposes only. Specifications subject to change.

Dimensions are in millimeters unless otherwise specified.

USA: +1 800 522 6752
Asia Pacific: +86 0 400 820 6015
UK: +44 800 267 666

For additional support numbers please visit www.te.com

## SolderSleeve PCB/Coaxial Cable Terminators (Continued)

### Specifications/Approvals

| Series | TE |
|---|---|
| D-607 | RT-1404 |
| B-046 | RT-1404 |

### Table A. D-607 Series Part Numbers

| RG Cable No. | Cable Dimensions (mm/in) Max. Outside Diameter | | | Part No. Entry to PCB | | |
|---|---|---|---|---|---|---|
| | Jacket | Shield | Dielectric | Straight grid 5.08 [.200] | Right-Angle Grid 5.08 [.200] | Straight Grid 2.54 [.100] |
| 174, 178, 179, 316, 404 | 1.5–3.55 [.060–.140] | 1.1–3.15 [.045–.125] | 0.60–2.25 [.025–.090] | D-607-09 | D-607-10 | D-607-40* |

### Table B. B-046 Series Part Numbers

| RG Cable No. | Cable Dimensions | | | | Pin Diameter | Part No. | | |
|---|---|---|---|---|---|---|---|---|
| | A | B | C | D Max. | | Spacing Between Pins 2.54 [.100] | 5.08 [.200] | 6.35 [.250] |
| 178, 404 | 0.30–0.80 [.011–.032] | 0.5–1.7 [.019–.067] | 1.3–2.3 [.050–.091] | 3.4 [.134] | 0.6 [.023] 0.8 [.031] | B-046-14-N | B-046-10-N | B-046-12-N |
| | | | | | | | B-046-11-N | B-046-13-N |
| 179, 316 | 0.3–1.6 [.011–.063] | 1.2–2.5 [.047–.100] | .1.5–2.8 [.060–.110] | 4.4 [.173] | 0.6 [.023] 0.8 [.031] | B-046-15-N | B-046-66-N | B-046-16-N |
| | | | | | | | B-046-68-N | B-046-18-N |

### Product Characteristics

| | | |
|---|---|---|
| **Material** | | |
| Insulation | Radiation-crosslinked, heat-shrinkable polyvinylidene fluoride | |
| Solder and flux | Solder: Sn63 Pb37 | Flux: ROL1 per ANSI - J - 004 (RMA flux) |
| Termination body/pin | Copper alloy, solder-plated | |
| **Typical Performance** | | |
| Voltage drop | 2.0 mV | |
| Tensile strength | Exceeds strength of conductor | |
| Dielectric strength | 2.0 kV | |
| Temperature rating | -55°C to 150°C [-67°F to 302°F] | |
| Insulation resistance | 1000 megohms | |
| **Electrical Performance (typical) D-607 Series Only** | | |
| **Frequency** | **VSWR (D-607-09, -40)** | **VSWR (D-607-10)** |
| 350 MHz | 1.04 max. | 1.04 max. |
| 700 MHz | 1.05 max. | 1.09 max. |
| 2.3 GHz | 1.09 max. | 1.12 max. |



Dimensions are shown for reference purposes only. Specifications subject to change.

Dimensions are in millimeters unless otherwise specified.

USA: +1 800 522 6752
Asia Pacific: +86 0 400 820 6015
UK: +44 800 267 666

For additional support numbers please visit www.te.com

## RF One-Step BNC/TNC Connectors

### Product Facts

- Easy, quick installation
- Outstanding cable-retention force
- Solder-solder connection type (center conductor and braid)
- One-step termination for easy, quick installation and lower installed cost
- Exceptional cable retention force to withstand high vibration and frequent mates and unmates
- Fully soldered center conductor and braid
- Excellent built-in strain relief against vibration and excessive handling
- Long-term reliability
- Controlled soldering termination
- Use with standard RG/U cables and TE Cheminax cables
- Three product sizes to accommodate a wide range of cables
- Meets performance requirements of MIL-C-39012 up to 2.8 GHz

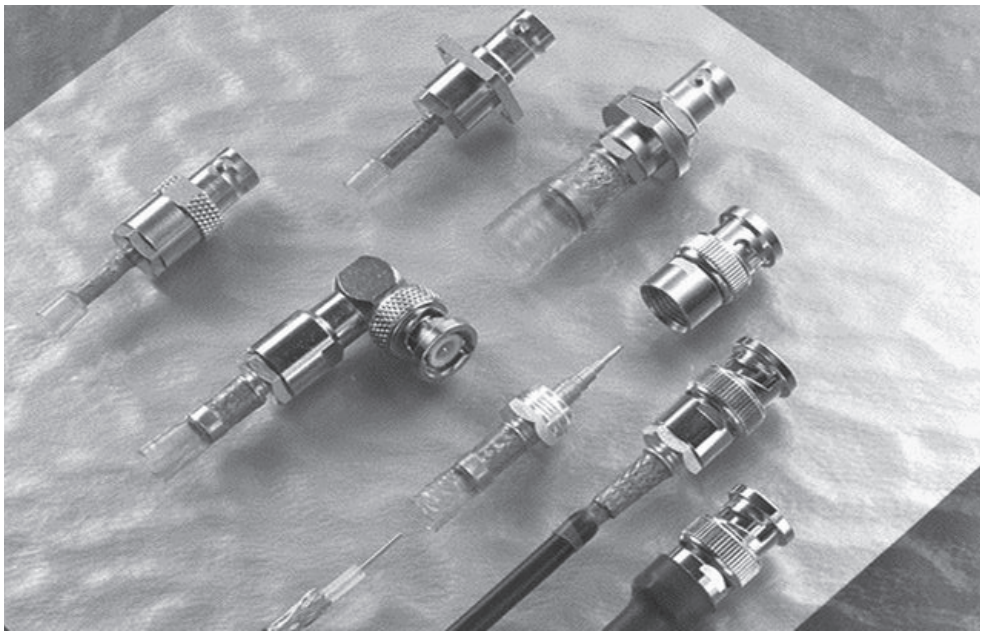

### Applications

One-Step BNC/TNC connectors are single-piece assemblies for terminating the center conductor and the braid of a broad range of coaxial cables.

The connectors are fully intermateable with MIL-C-39012 connectors and are available in 50-ohm and 75-ohm versions.

| Specifications | Installation | |
|---|---|---|
| TE RB-115 | For proper installation of these devices, the correct heating tool and reflector attachment must be used.<br>Any one of the following TE heating tools is recommended:<br>• Steinel® Model HL-2010E-230V<br>• CV-1981 | Refer to TE installation procedure RPIP-683-00 for detailed instructions. |

| Available in: | |
|---|---|
| Americas | ■ |
| Europe | ■ |
| Asia Pacific | ■ |





Catalog 1654025
Revised 3-13

www.te.com

Dimensions are shown for reference purposes only. Specifications subject to change.

Dimensions are in millimeters unless otherwise specified.

USA: +1 800 522 6752
Asia Pacific: +86 0 400 820 6015
UK: +44 800 267 666

For additional support numbers please visit www.te.com

## RF One-Step BNC/TNC Connectors (Continued)

### Product Options and Part Numbering System

| RXX - XX - X - XX | Connector Style: Dash No. -XX | Connector Style: Style | Connector Type: TNC | Connector Type: BNC |
|---|---|---|---|---|
| | -00 | Straight plug | 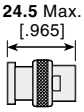 24.5 Max. [.965] | 24.5 max. [.965] |
| | -01 | Right-angle plug | 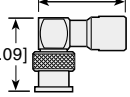 33.5 Max. [1.32]; 28 [1.09] | 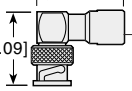 31.5 max. [1.23]; 28 [1.09] |
| | -02 | Straight bulkhead jack | 25.4 max. [1.0] | 25.4 Max. [1.0] |
| | -03 | Straight jack | 25.4 max. [1.0] | 25.4 Max. [1.0] |
| | -04 | Straight panel jack | 25.4 Max. [1.0]; 4 x M2.5 x 0.45 | 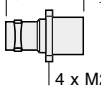 25.4 Max. [1.0]; 4 x M2.5 x 0.45 |

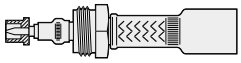

Male

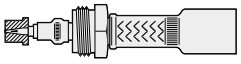

Female

**Connector size**

L = Large
M = Medium
S = Small

50 = 50 ohms
75 = 75 ohms

D = Nickel-plated brass body, gold-plated brass pin

B = BNC
T = TNC

Example: RBD-50-L-00 is a BNC connector, 50 ohms, large size, with straight plug body.



Catalog 1654025
Revised 3-13

www.te.com

Dimensions are shown for reference purposes only. Specifications subject to change.

Dimensions are in millimeters unless otherwise specified.

USA: +1 800 522 6752
Asia Pacific: +86 0 400 820 6015
UK: +44 800 267 666

For additional support numbers please visit www.te.com

## RF One-Step BNC/TNC Connectors (Continued)

### Product Characteristics

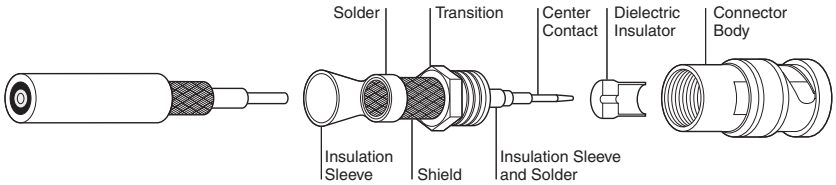


| | |
|---|---|
| **Material** | |
| Center contact | Gold-plated beryllium copper (female) |
| | Gold-plated brass (male) |
| Dielectric insulator | PTFE |
| Transition | Silver-plated brass |
| Connector body | Nickel-plated brass |
| Solder and flux | Sn63Pb37, RMA flux |
| Braided shield | Tin-plated copper wire per ASTM B3 |
| Insulation sleeve | Radiation-crosslinked, heat-shrinkable polyvinylidene fluoride, transparent blue |
| Strain relief/sealing sleeve | Radiation-crosslinked, heat-shrinkable modified polyolefin with adhesive, black |
| **Typical Performance** | |
| Dielectric withstand voltage | 1500 V |
| Insulation resistance | 5000 megohms |
| Temperature rating | -55˚C to 150˚C [-67˚F to 302˚F] |
| Contact resistance-straight | Inner = 1.5 milliohms, outer = 1.0 milliohm |
| Contact resistance — right-angle | Inner = 2.5 milliohms, outer = 1.5 milliohms |
| Cable retention force | 295N (66 lb) to 822N (196 lb) |
| Voltage rating | 500 V RMS |
| Connector durability | 500 mating cycles minimum |
| **Electrical Performance** | |
| Nominal impedance | 50 and 75 ohms |
| Frequency range | Up to 2.8 GHz |

### Part Selection Process

1. From Product Options and Part Numbering System on page 8-58, select the connector style you need (BNC or TNC, plug or jack, male or female contacts).
2. From the tables that follow, find the appropriate table for the connector style you selected.
3. From the appropriate table, select the connector part number based on the RG cable type or cable part number. For cable types not shown use the cable dimensions.
   Note: The cable dimensions in each table are keyed to the diagram below.

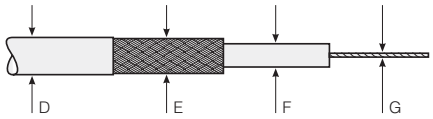

## RF One-Step BNC/TNC Connectors (Continued)

| Impedance (ohms) | Cable Type: RG Cables | Cable Type: Cables | Cable Dimensions: D (Min.–Max.) | Cable Dimensions: E (Min.–Max.) | Cable Dimensions: F (Max.) | Cable Dimensions: G (Max.) | Part No. |
|---|---|---|---|---|---|---|---|
| **BNC Straight Plugs, Male Contacts** | | | | | | | |
| 50 | RG-174, RG-178, RG-188, RG-196,RG–316 | 5026A1311, 5028A1317, 5030A1317 | 1.50–5.50 [.060–.217] | 0.90–3.00 [.035–.118] | 1.55 [.060] | 0.65 [.025] | RBD-50-S-00 |
| 50 | RG-58, RG-141, RG-142, RG-303, RG-400 | 5019D3318, 5021D1331, 5020A1311 | 3.50–7.00 [.138–.276] | 2.10–5.00 [.083–.197] | 3.00 [.118] | 1.25 [.050] | RBD-50-M-00 |
| 50 | RG-165, RG-215, RG-213, RG-225, RG-214 | 5012F3332, 5012A3311 | 5.00–12.50 [.197–.500] | 4.10–9.50 [.161–.375] | 7.30 [.287] | 2.45 [.100] | RBD-50-L-00 |
| 75 | RG-179, RG-187 | 7530A1317 | 1.50–5.00 [.060–.217] | 5 0.90-3.00 [.035–.118] | 1.55 [.060] | 0.65 [.025] | RBD-75-S-00 |
| 75 | — | 7524A1311, 7528A1317 | 3.50–7.00 [.138–.276] | 2.10–5.00 [.083–.197] | 3.70 [.126] | 1.25 [.050] | RBD-75-M-00 |
| 75 | RG-6, RG-11, RG-12, RG-59 RG-144, RG-216 | — | 5.00–.12.50 [.197–.500] | 4.10–9.50 [.161–.375] | 7.3 [.287] | 2.45 [.100] | RBD-75-L-00 |
| **BNC Right-Angle Plugs, Male Contacts** | | | | | | | |
| 50 | RG-174, RG-178, RG-188, RG-196,RG–316 | 5026A1311, 5028A1317, 5030A1317 | 1.50–5.50 [.060–.217] | 0.90–3.00 [.035–.118] | 1.55 [.060] | 0.65 [.025] | RBD-50-S-01 |
| 50 | RG-58, RG-141, RG-142, RG-303, RG-400 | 5019D3318, 5021D1331, 5020A1311 | 3.50–7.00 [.138–.276] | 2.10–5.00 [.083–.197] | 3.00 [.118] | 1.25 [.050] | RBD-50-M-01 |
| 50 | RG-165, RG-215, RG-213, RG-225, RG-214 | 5012F3332, 5012A3311 | 5.00–12.50 [.197–.500] | 4.1–9.50 [.161–.375] | 7.30 [.287] | 2.45 [.100] | RBD-50-L-01 |
| 75 | RG-179, RG-187 | 7530A1317 | 1.50–5.50 [.060–.217] | 0.9-3.00 [.035–.118] | 1.55 [.060] | 0.65 [.025] | RBD-75-S-01 |
| 75 | — | 524A1311, 7528A1317 | 3.50–7.00 [.138–.276] | 2.1–5.00 [.083–.197] | 3.70 [.146] | 1.25 [.050] | RBD-75-M-01 |
| 75 | RG-6, RG-11, RG-12, RG-59 RG-144, RG-216 | — | 5.00–12.50 [.197–.500] | 4.1–9.50 [.161–.375] | 7.30 [.287] | 2.45 [.100] | RBD-75-L-01 |
| **BNC Straight Bulkhead Jacks, Female Contacts** | | | | | | | |
| 50 | RG-174, RG-178, RG-188, RG-196,RG–316 | 5026A1311, 5028A1317, 5030A1317 | 1.50–5.50 [.060–.217] | 0.90–3.00 [.035–.118] | 1.55 [.060] | 0.65 [.025] | RBD-50-S-02 |
| 50 | RG-58, RG-141, RG-142, RG-303, RG-400 | 5019D3318, 5021D1331, 5020A1311 | 3.50–7.00 [.138–.276] | 2.10–5.00 [.083–.197] | 3.00 [.118] | 1.25 [.050] | RBD-50-M-02 |
| 50 | RG-165, RG-215, RG-213, RG-225, RG-214 | 5012F3332, 5012A3311 | 5.00–12.50 [.197–.500] | 4.10–9.50 [.161–.375] | 7.30 [.287] | 2.45 [.100] | RBD-50-L-02 |
| 75 | RG-179, RG-187 | 7530A1317 | 1.50–5.00 [.060–.217] | 5 0.90-3.00 [.035–.118] | 1.55 [.060] | 0.65 [.025] | RBD-75-S-02 |
| 75 | — | 75 7524A1311, 7528A1317 | 3.50–7.00 [.138–.276] | 2.10–5.00 [.083–.197] | 3.70 [.146] | 1.25 [.050] | RBD-75-M-02 |
| 75 | RG-6, RG-11, RG-12, RG-59 RG-144, RG-216 | — | 5.00-12.50 [.197–.500] | 4.10–9.50 [.161–.375] | 7.30 [.287] | 2.45 [.100] | RBD-75-L-02 |
| **BNC Straight Jacks, Female Contacts** | | | | | | | |
| 50 | RG-174, RG-178, RG-188, RG-196,RG–316 | 5026A1311, 5028A1317, 5030A1317 | 1.50–5.50 [.060–.217] | 0.90–3.00 [.035–.118] | 1.55 [.060] | 0.65 [.025] | RBD-50-S-03 |
| 50 | RG-58, RG-141, RG-142, RG-303, RG-400 | 5019D3318, 5021D1331, 5020A1311 | 3.50–7.00 [.138–.276] | 2.10–5.00 [.083–.197] | 3.00 [.118] | 1.25 [.050] | RBD-50-M-03 |
| 50 | RG-165, RG-215, RG-213, RG-225, RG-214 | 5012F3332, 5012A3311 | 5.00–12.50 [.197–.500] | 4.10–9.50 [.161–.375] | 7.30 [.287] | 2.45 [.100] | RBD-50-L-03 |
| 75 | RG-179, RG-187 | 7530A1317 | 1.50–5.50 [.060–.217] | 0.90–3.00 [.035–.118] | 1.55 [.060] | 0.65 [.025] | RBD-75-S-03 |
| 75 | — | 75 7524A1311, 7528A1317 | 3.50–7.00 [.138–.276] | 2.10–5.00 [.083–.197] | 3.70 [.146] | 1.25 [.050] | RBD-75-M-03 |
| 75 | RG-6, RG-11, RG-12, RG-59 RG-144, RG-216 | — | 5.00–12.50 [.197–.500] | 4.10–9.50 [.161–.375] | 7.30 [.287] | 2.45 [.100] | RBD-75-L-03 |
| **BNC Straight Panel Jacks, Female Contacts** | | | | | | | |
| 50 | RG-174, RG-178, RG-188, RG-196,RG–316 | 5026A1311, 5028A1317, 5030A1317 | 1.50–5.50 [.060–.217] | 0.90–3.00 [.035–.118] | 1.55 [.060] | 0.65 [.025] | RBD-50-S-04 |
| 50 | RG-58, RG-141, RG-142, RG-303, RG-400 | 5019D3318, 5021D1331, 5020A1311 | 3.50–7.00 [.138–.276] | 2.10–5.00 [.083–.197] | 3.00 [.118] | 1.25 [.050] | RBD-50-M-04 |
| 50 | RG-165, RG-215, RG-213, RG-225, RG-214 | 5012F3332, 5012A3311 | 5.00–12.50 [.197–.500] | 4.10–9.50 [.161–.375] | 7.30 [.287] | 2.45 [.100] | RBD-50-L-04 |
| 75 | RG-179, RG-187 | 7530A1317 | 1.50–5.50 [.060–.217] | 0.90–3.00 [.035–.118] | 1.55 [.060] | 0.65 [.025] | RBD-75-S-04 |
| 75 | — | 7524A1311, 7528A1317 | 3.50–7.00 [.138–.276] | 2.10–5.00 [.083–.197] | 3.70 [.146] | 1.25 [.050] | RBD-75-M-04 |
| 75 | RG-6, RG-11, RG-12, RG-59 RG-144, RG-216 | — | 5.00–12.50 [.197–.500] | 4.10–9.5o [.161–.375] | 7.30 [.287] | 2.45 [.100] | RBD-75-L-04 |



Dimensions are shown for reference purposes only. Specifications subject to change.

Dimensions are in millimeters unless otherwise specified.

USA: +1 800 522 6752
Asia Pacific: +86 0 400 820 6015
UK: +44 800 267 666

For additional support numbers please visit www.te.com

## RF One-Step BNC/TNC Connectors (Continued)

### TNC Coaxial Connectors

| Impedance (ohms) | Cable Type: RG Cables | Cable Type: Cables | Cable Dimensions: D (Min.–Max.) | Cable Dimensions: E (Min.–Max.) | Cable Dimensions: F (Max.) | Cable Dimensions: G (Max.) | Part No. |
|---|---|---|---|---|---|---|---|
| **TNC Straight Plugs, Male Contacts** | | | | | | | |
| 50 | RG-174, RG-178, RG-188, RG-196,RG–316 | 5026A1311, 5028A1317, 5030A1317 | 1.50–5.50 [.060–.217] | 0.90–3.00 [.035–.118] | 1.55 [.060] | 0.65 [.025] | RTD-50-S-00 |
| 50 | RG-58, RG-141, RG-142, RG-303, RG-400 | 5019D3318, 5021D1331, 5020A1311 | 3.50–7.00 [.138–.276] | 2.10–5.00 [.083–.197] | 3.00 [.118] | 1.25 [.050] | RTD-50-M-00 |
| 50 | RG-165, RG-215, RG-213, RG-225, RG-214 | 5012F3332, 5012A3311 | 5.00–12.50 [.197–.500] | 4.10–9.50 [.161–.375] | 7.30 [.287] | 2.45 [.100] | RTD-50-L-00 |
| 75 | RG-179, RG-187 | 7530A1317 | 1.50–5.50 [.060–.217] | 0.90-3.00 [.035–.118] | 1.55 [.060] | 0.65 [.025] | RTD-75-S-00 |
| 75 | — | 7524A1311, 7528A1317 | 3.50–7.00 [.138–.276] | 2.10–5.00 [.083–.197] | 3.70 [.146] | 1.25 [.050] | RTD-75-M-00 |
| 75 | RG-6, RG-11, RG-12, RG-59 RG-144, RG-216 | — | 5.00–12.50 [.197–.500] | 4.10–9.50 [.161–.375] | 7.30 [.287] | 2.45 [.100] | RTD-75-L-00 |
| **TNC Straight Jacks, Female Contacts** | | | | | | | |
| 50 | RG-174, RG-178, RG-188, RG-196,RG–316 | 5026A1311, 5028A1317, 5030A1317 | 1.5–5.5 [.060–.217] | 0.9–3.0 [.035–.118] | 1.55 [.060] | 0.65 [.025] | RTD-50-S-03 |
| 50 | RG-58, RG-141, RG-142, RG-303, RG-400 | 5019D3318, 5021D1331, 5020A1311 | 3.5–7.0 [.138–.276] | 2.1–5.0 [.083–.197] | 3.0 [.118] | 1.25 [.050] | RTD-50-M-03 |
| 50 | RG-165, RG-215, RG-213, RG-225, RG-214 | 5012F3332, 5012A3311 | 5.0–12.5 [.197–.500] | 4.1–9.5 [.161–.375] | 7.3 [.287] | 2.45 [.100] | RTD-50-L-03 |
| 75 | RG-179, RG-187 | 7530A1317 | 1.5–5.5 [.060–.217] | 0.9–3.0 [.035–.118] | 1.55 [.060] | 0.65 [.025] | RTD-75-S-03 |
| 75 | — | 7524A1311, 7528A1317 | 3.5–7.0 [.138–.276] | 2.1–5.0 [.083–.197] | 3.7 [.146] | 1.25 [.050] | RTD-75-M-03 |
| 75 | RG-6, RG-11, RG-12, RG-59 RG-144, RG-216 | — | 5.0–12.5 [.197–.500] | 4.1–9.5 [.161–.375] | 7.3 [.287] | 2.45 [.100] | RTD-75-L-03 |
| **TNC Straight Panel Jacks, Female Contacts** | | | | | | | |
| 50 | RG-174, RG-178, RG-188, RG-196,RG–316 | 5026A1311, 5028A1317, 5030A1317 | 1.5–5.5 [.060–.217] | 0.9–3.0 [.035–.118] | 1.55 [.060] | 0.65 [.025] | RTD-50-S-04 |
| 50 | RG-58, RG-141, RG-142, RG-303, RG-400 | 5019D3318, 5021D1331, 5020A1311 | 3.5–7.0 [.138–.276] | 2.1–5.0 [.083–.197] | 3.0 [.118] | 1.25 [.050] | RTD-50-M-04 |
| 50 | RG-165, RG-215, RG-213, RG-225, RG-214 | 5012F3332, 5012A3311 | 5.0–12.5 [.197–.500] | 4.1–9.5 [.161–.375] | 7.3 [.287] | 2.45 [.100] | RTD-50-L-04 |
| 75 | RG-179, RG-187 | 7530A1317 | 1.5–5.5 [.060–.217] | 0.9–3.0 [.035–.118] | 1.55 [.060] | 0.65 [.025] | RTD-75-S-04 |
| 75 | — | 7524A1311, 7528A1317 | 3.5–7.0 [.138–.276] | 2.1–5.0 [.083–.197] | 3.7 [.146] | 1.25 [.050] | RTD-75-M-04 |
| 75 | RG-6, RG-11, RG-12, RG-59 RG-144, RG-216 | — | 5.0–12.5 [.197–.500] | 4.1–9.5 [.161–.375] | 7.3 [.287] | 2.45 [.100] | RTD-75-L-04 |







Dimensions are shown for reference purposes only. Specifications subject to change.

Dimensions are in millimeters unless otherwise specified.

USA: +1 800 522 6752
Asia Pacific: +86 0 400 820 6015
UK: +44 800 267 666

For additional support numbers please visit www.te.com

## RF One-Step BNC/TNC Connectors (Continued)

### TNC Coaxial Connectors

Panel thickness: 3.2 [.125] max.

RBD-XX-X-04
RTD-XX-X-04

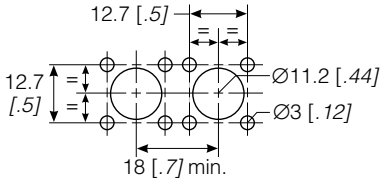


RBD-XX-X -02
RTD-XX-X -02

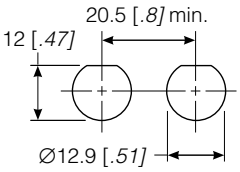


| Cable Type | | | Cable Dimensions | | | | Part No. |
|---|---|---|---|---|---|---|---|
| Impedance (ohms) | RG Cables | Cables | D (Min.–Max.) | E (Min.–Max.) | F (Max.) | G (Max.) | |
| **TNC Straight Bulkhead Jacks, Female Contacts** | | | | | | | |
| 50 | RG-174, RG-178, RG-188, RG-196,RG–316 | 5026A1311, 5028A1317, 5030A1317 | 1.50–5.50 [.060–.217] | 0.90–3.00 [.035–.118] | 1.55 [.060] | 0.65 [.025] | RTD-50-S-02 |
| 50 | RG-58, RG-141, RG-142, RG-303, RG-400 | 5019D3318, 5021D1331, 5020A1311 | 3.5–7.0 [.138–.276] | 2.10–5.00 [.083–.197] | 3.00 [.118] | 1.25 [.050] | RTD-50-M-02 |
| 50 | RG-165, RG-215, RG-213, RG-225, RG-214 | 5012F3332, 5012A3311 | 5.0–12.5 [.197–.500] | 4.10–9.50 [.161–.375] | 7.30 [.287] | 2.45 [.100] | RTD-50-L-02 |
| 75 | RG-179, RG-187 | 7530A1317 | 1.5–5.5 [.060–.217] | 0.90–3.00 [.035–.118] | 1.55 [.060] | 0.65 [.025] | RTD-75-S-02 |
| 75 | — | 7524A1311, 7528A1317 | 3.5–7.0 [.138–.276] | 2.10–5.00 [.083–.197] | 3.70 [.146] | 1.25 [.050] | RTD-75-M-02 |
| 75 | RG-6, RG-11, RG-12, RG-59 RG-144, RG-216 | — | 5.0–12.5 [.197–.500] | 4.10–9.50 [.161–.375] | 7.30 [.287] | 2.45 [.100] | RTD-75-L-02 |
| **TNC Right-Angle Plugs, Male Contacts** | | | | | | | |
| 50 | RG-174, RG-178, RG-188, RG-196,RG–316 | 5026A1311, 5028A1317, 5030A1317 | 1.50–5.50 [.060–.217] | 0.90–3.00 [.035–.118] | 1.55 [.060] | 0.65 [.025] | RTD-50-S-01 |
| 50 | RG-58, RG-141, RG-142, RG-303, RG-400 | 5019D3318, 5021D1331, 5020A1311 | 3.50–7.00 [.138–.276] | 2.10–5.00 [.083–.197] | 3.00 [.118] | 1.25 [.050] | RTD-50-M-01 |
| 50 | RG-165, RG-215, RG-213, RG-225, RG-214 | 5012F3332, 5012A3311 | 5.00–12.50 [.197–.500] | 4.10–9.50 [.161–.375] | 7.30 [.287] | 2.45 [.100] | RTD-50-L-01 |
| 75 | RG-179, RG-187 | 7530A1317 | 1.50–5.50 [.060–.217] | 0.90–3.00 [.035–.118] | 1.55 [.060] | 0.65 [.025] | RTD-75-S-01 |
| 75 | — | 7524A1311, 7528A1317 | 3.50–7.00 [.138–.276] | 2.10–5.00 [.083–.197] | 3.70 [.146] | 1.25 [.050] | RTD-75-M-01 |
| 75 | RG-6, RG-11, RG-12, RG-59 RG-144, RG-216 | — | 5.0–12.5 [.197–.500] | 4.10–9.50 [.161–.375] | 7.30 [.287] | 2.45 [.100] | RTD-75-L-01 |



Dimensions are shown for reference purposes only. Specifications subject to change.

Dimensions are in millimeters unless otherwise specified.

USA: +1 800 522 6752
Asia Pacific: +86 0 400 820 6015
UK: +44 800 267 666

For additional support numbers please visit www.te.com

## Introduction

The question is, how to meet growing performance requirements for shielded cable system fabrication and maintenance while minimizing electromagnetic interference (EMI). The answer is TE SolderShield cable splices. SolderShield devices are one-piece products consisting of a flux-coated, solder-impregnated copper shield braid encased in a heat-shrinkable insulation sleeve.

SolderShield cable-to-cable splice kits, designed for single-conductor or multi-conductor shielded cables, are ideal for fabrication/repair/rework while restoring the electrical integrity of the cable.

SolderShield devices perform even in demanding environments. They are reliable, versatile, and easy to install.





Catalog 1654025
Revised 3-13

www.te.com

Dimensions are shown for reference purposes only. Specifications subject to change.

Dimensions are in millimeters unless otherwise specified.

USA: +1 800 522 6752
Asia Pacific: +86 0 400 820 6015
UK: +44 800 267 666

For additional support numbers please visit www.te.com

## SolderShield Shielded and Coaxial Cable Splices

### Product Facts

- **Flux-coated, solder-impregnated copper shield braid encased in a transparent heat-shrinkable insulation sleeve provides a controlled soldering process, encapsulation, inspectability, strain relief, and insulation**
- **One-piece design provides easy installation and lower installed cost**
- **Circumferential (360°) shielding results in EMI protection and shield continuity equal to or better than the original cable**
- **Conductor splices are made using MiniSeal crimp products, which are recognized by MIL-S-81824 and MIL-W-5088**

### Applications

Used for splicing a wide range of cables, including coaxial and multiconductor cables.

SolderShield devices can be used to repair or splice shielded or coaxial cables. These products consist of a MiniSeal crimp splice plus a flux-coated, solder-impregnated copper shield encased in a heat-shrinkable sealing sleeve, for splicing the shields. SolderShield kits terminate single- or multiple-conductor cables, eliminate EMI problems at the splice, and provide strain relief for the cable.

### Product Selection Process

For splicing multiconductor cables refer to Table A.

For splicing coaxial cables refer to Table B.

### Installation

For proper installation of these devices, the correct heating tool and reflector attachment must be used. Any one of the following TE heating tools is recommended:

- HL1910E/HL2010E
- IR-1759 MiniRay
- CV-1981

Refer to TE installation procedure RCPS-150-02 (D-150 series) and RPIP-699-00 (B-202 series) for detailed instructions and recommended reflector attachment.

You will find ordering information for most of these tools in Section 10.

### Specifications/Approvals

| Series | Military | TE |
|---|---|---|
| D-150 | US: M81824 (conductor splice only)<br>UK: RAF AP 1130-2008-1 | RT-1404 |

| Available in: | |
|---|---|
| Americas | ■ |
| Europe | ■ |
| Asia Pacific | ■ |



Catalog 1654025
Revised 3-13

www.te.com

Dimensions are shown for reference purposes only. Specifications subject to change.

Dimensions are in millimeters unless otherwise specified.

USA: +1 800 522 6752
Asia Pacific: +86 0 400 820 6015
UK: +44 800 267 666

For additional support numbers please visit www.te.com

## SolderShield Shielded and Coaxial Cable Splices (Continued)

### Table A. Multiconductor Cable Splices

Each SolderShield part consists of a SolderShield splice and one or more conductor splices. Refer to information below for description and numbers of conductor splices.

**SolderShield Splice**

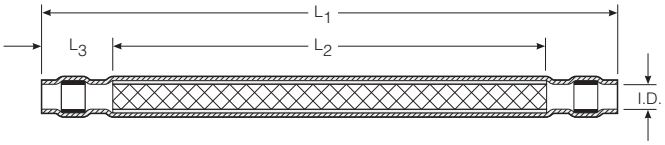


**Crimp Splice**

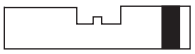

**SolderShield Product Dimensions**

| Part No. | | Dimensions | | | | Conductor Splice Size Range CMA [mm²] Min.–Max. | Color Code | Quantity Per Kit |
|---|---|---|---|---|---|---|---|---|
| Tin Plated | Nickel Plated | L1 Max. | L2 Nom. | L3 Min. | ID Min. | | | |
| D-150-0168 | D-150-0228 | 80.50 [3.17] | 50.00 [1.97] | 10.20 [.400] | 3.00 [.118] | 304–1510 [0.15–0.75] | Red | 1 |
| D-150-0169 | D-150-0229 | 80.50 [3.17] | 50.00 [1.97] | 10.20 [.400] | 4.00 [.157] | 779–2680 [0.39–1.34] | Blue | 1 |
| D-150-0170 | D-150-0230 | 80.50 [3.17] | 50.00 [1.97] | 10.20 [.400] | 5.00 [.197] | 1900–6755 [0.95–3.37] | Yellow | 1 |
| D-150-0174 | D-150-0231 | 10.60 [4.17] | 75.00 [2.95] | 10.20 [.400] | 4.00 [.157] | 304–1510 [0.15–0.75] | Red | 2 |
| D-150-0175 | D-150-0232 | 10.60 [4.17] | 75.00 [2.95] | 10.20 [.400] | 5.00 [.197] | 779–2680 [0.39–1.34] | Blue | 2 |
| D-150-0176 | D-150-0233 | 10.60 [4.17] | 75.00 [2.95] | 10.20 [.400] | 6.00 [.236] | 1900–6755 [0.95–3.37] | Yellow | 2 |
| D-150-0177 | D-150-0234 | 10.60 [4.17] | 75.00 [2.95] | 10.20 [.400] | 9.00 [.356] | 304–1510 [0.15–0.75] | Yellow | 2 |
| D-150-0178 | D-150-0235 | 10.60 [4.17] | 75.00 [2.95] | 10.20 [.400] | 4.00 [.157 ] | 304–1510 [0.15–0.75] | Red | 4 |
| D-150-0179 | D-150-0236 | 10.60 [4.17] | 75.00 [2.95] | 10.20 [.400] | 5.00 [.197] | 779–2680 [0.39–1.34] | Red | 4 |
| D-150-0180 | D-150-0237 | 10.60 [4.17] | 75.00 [2.95] | 10.20 [.400] | 6.00 [.236] | 1900–6755 [0.95–3.37] | Blue | 4 |
| D-150-0181 | D-150-0238 | 10.60 [4.17] | 75.00 [2.95] | 10.20 [.400] | 9.00 [.353] | 1900–6755 [0.95–3.37] | Yellow | 4 |

**Note:** The SolderShield splice kits listed in this table are for 1:1 cable splices. The kits can be used on cables with tin-, silver-, and nickel-plated copper conductors. All the kits have environmental-sealing capability. The cable temperature rating must be 125°C minimum.

To find the splice kit part number for your application:

1. Determine the number of conductors in the cable to be spliced.
2. Determine the gauge of each conductor or the maximum jacket OD.
3. Determine the conductor plating.
4. Select the appropriate part number from the table above.







Dimensions are shown for reference purposes only. Specifications subject to change.

Dimensions are in millimeters unless otherwise specified.

USA: +1 800 522 6752
Asia Pacific: +86 0 400 820 6015
UK: +44 800 267 666

For additional support numbers please visit www.te.com

## SolderShield Shielded and Coaxial Cable Splices (Continued)

### Table B. Coaxial Cable Splices

Each SolderShield part consists of a SolderShield splice and one or more conductor splices. Refer to information below for description and numbers of conductor splices.

**SolderShield Splice**

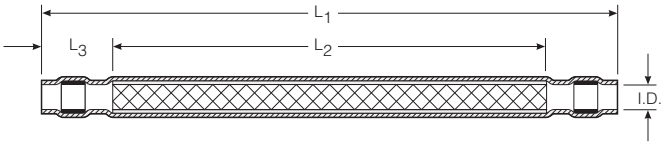


**Crimp Splice**

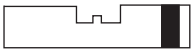

| RG Cable No. | Cable Description | Conductor Splice Qty/Kit | Part No. | SolderShield Dimensions | | |
|---|---|---|---|---|---|---|
| | | | | L1 Max | L2 Min | ID Min |
| 8A, 9B, 11 | 5012A3311 | 1 | D-150-0214 | 80.50 [3.170] | 50.00 [1.970] | 12.00 [.472] |
| 13, 26, 31 | 5012E1339 | | | | | |
| 115, 144, 149 | 7518A1311 | | | | | |
| 165, 213, 214 | — | | | | | |
| 216, 235, 391 | — | | | | | |
| 393, 397 | — | | | | | |
| 178, 196, | 5028A1317 | 1 | D-150-0094 | 80.50 [3.170] | 50.00 [1.970] | 3.00 [.118] |
| 179, 187, 188, | 7528A1317 | | | | | |
| 316, 404, M17/138-00001, | 5030A1317 | | | | | |
| M17/136-00001 | 7530A1317 | | | | | |
| 180, 195 | 5024A1311 | 1 | D-150-0095 | 80.50 [3.170] | 50.00 [1.970] | 4.00 [.157] |
| M17/137-00001 | 7526A1311 | | | | | |
| M17/139-00001 | 9527A1318 | | | | | |
| — | 9530E1014 | | | | | |
| 124, 140, 141 | 5020A1311 | 1 | D-150-0096 | 80.50 [3.170 ] | 50.00 [1.970] | 5.00 [.236] |
| 159, 302, 303 | 5022A1311 | | | | | |
| — | 7522A1311 | | | | | |
| — | 7523D1331 | | | | | |
| — | 7524A1311 | | | | | |
| 29, 30, 55B | 5019D3318 | 1 | B-202-81* | 56.00 [2.200] | 23.00 [.900] | 7.00 [.275] |
| 58, 223 | 5021D1331 | | | | | |
| — | 5022A1311 | | | | | |
| 59, 62, 71 | 7523D1331 | 1 | B-202-82* | 56.00 [2.200 ] | 23.00 [.900] | 7.00 [.275] |
| — | 7524A1311 | | | | | |
| — | 9524A1311 | | | | | |

*These kits use solder to terminate the center conductors. All other kits use crimp.
All kits are for one-to-one coaxial cable splices, and all kits have environmental sealing capability. Each kit contains products to splice conductors, build up dielectric, splice the shield, and provide insulation.



Dimensions are shown for reference purposes only. Specifications subject to change.

Dimensions are in millimeters unless otherwise specified.

USA: +1 800 522 6752
Asia Pacific: +86 0 400 820 6015
UK: +44 800 267 666

For additional support numbers please visit www.te.com

## SolderShield Shielded and Coaxial Cable Splices (Continued)

### Product Characteristics

| Materials | |
|---|---|
| Insulation sleeve | Radiation-crosslinked polyvinylidene fluoride |
| Meltable inserts | Fluorocarbon-based thermoplastic |
| MiniSeal crimp splice | Base metal: Copper alloy C10200 per ASTM B75<br>Plating: Tin per MIL-T-10727 or nickel per QQ-N-290 |
| SolderShield shield splice | Base metal: Tin-plated copper wire braid per ASTM B3<br>Solder and flux coating: Type Sn63 Pb37. Flux: ROM1 per ANSI - J - STD - 004 (RA flux) |

| Parameter | Test Method | Requirement |
|---|---|---|
| **Electromechanical Performance** | | |
| Dielectric strength (shield connection) | — | No breakdown or arcing at 1000 Vac (RMS) |
| Dielectric strength (conductor connection) | — | 2.5 kV |
| Voltage drop | MIL-S-81824 | Less than 2.0-millivolt increase |
| Insulation resistance (shield connection) | — | 1000 megohms minimum at 500 Vdc |
| Insulation resistance (conductor connection) | — | 5000 megohms |
| Tensile strength for MiniSeal | MIL-S-81824 | Exceed yield strength (pounds) of wire. |
| Tensile strength for SolderShield | MIL-S-81824 | 75% of strength (pounds) of unspliced cable |
| Temperature rating | — | -55°C to 150°C [-67°F to 302°F] |
| **Environmental Resistance** | | |
| Salt spray | MIL-STD-202 M101 | Meet voltage drop requirement. |
| Heat aging | 750 hours at 150°C [302°F] | Meet all electromechanical requirements. |
| Temperature cycling | MIL-STD-202 M107C | Meet all electromechanical requirements. |
| Altitude immersion | Immersion at 22,860m [75,000 ft] | Meet insulation-resistance requirement. |
| Corrosion resistance | — | No evidence of corrosion after testing in accordance with MIL-STD-202, Method 101, Test Condition A |

## Raychem C-Wrap Side Entry Repair Sleeve

### Product Facts

- **150°C rated**
- **Easy to install: saves time, man power and cost**
- **Color-coded to ensure proper sizing for each application**
- **Long term performance provides a permanent repair**
- **Low profile (small diameter and short length)**
- **Side Entry for easy access to damaged wire**
- **Wrap-around design eliminates de-pinning of connector for repair**

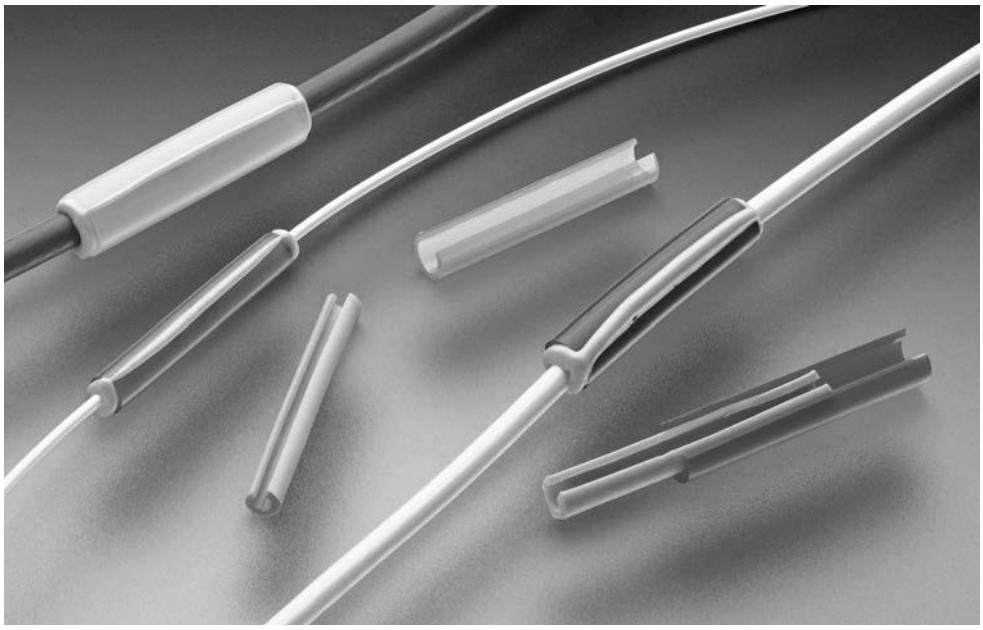

### Description

TE Connectivity's C-Wrap side repair sleeve consists of two pieces; the outer tubing and an adhesive inner layer. It is a side-entry sleeve designed to repair and seal a damaged wire jacket that is either chafed or has a radial crack or cut on the insulation.

### Applications

- Used as a side-entry repair kit
- Repair of nicks, chafed and radial cracks on the wire in most Aerospace, Defense and Marine applications
- Prevents galvanic corrosion on center conductor
- RoHS compliant

### Materials

- Meltable adhesive — Modified thermoplastic fluroelastomer
- Insulation sleeve — Radiation cross-linked modified fluropolymer

### Environmental

- Environmental resistant
- For use on insulations rated at 135˚C or higher
- Temperature range: -65˚C to +150˚C

### Standards & Specs

- Meets fluid and sealing requirements called out in SAE-AS81824
- Product Specification: TE D-6201
- Installation Procedure: RPIP-1101

### Application Tooling

- Steinel HL1910E or HL2010E General Purpose Hot-Air Tool
- Steinel HL1802E-074616 SolderSleeve Reflector for HL Tools
- Leister CV-198X Series
- M81969/8-08 (for D-150-C-11 & D-150-C-12) MIL spec installation tool
- M81969/8-10 (for D-150-C-13 & D-150-C-14) MIL spec installation tool



Dimensions are shown for reference purposes only. Specifications subject to change.

Dimensions are in millimeters unless otherwise specified.

USA: +1 800 522 6752
Asia Pacific: +86 0 400 820 6015
UK: +44 800 267 666

For additional support numbers please visit www.te.com

## Raychem C-Wrap Side Entry Repair Sleeve (Continued)

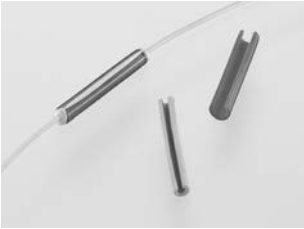

**D-150-C-11**
**PN CX2001-000**

**D-150-C-12**
**PN CX2096-000**

**D-150-C-13**
**PN CX2097-000**

**D-150-C-14**
**PN CX2098-000**

**Customer Drawing**

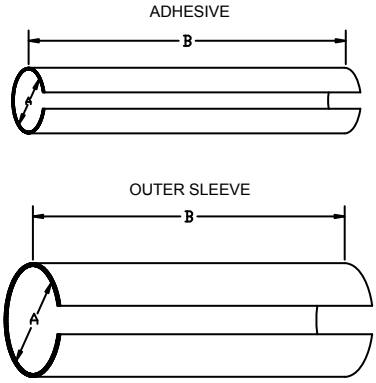


| PART DESCRIPTION | COLOR CODE | PRODUCT DIMENSION | | | | CONDUCTOR | |
|---|---|---|---|---|---|---|---|
| | | I.D. (A) | | Cut Length (B) | | Wire O.D. (Note*) | |
| | | Adhesive ± .05 (.002) | Sleeve ± .05 (.002) | Adhesive ± 1.5 (.06) | Sleeve ± .5 (.02) | Min | Max |
| D-150-C-11 | Green | 1.11 (.044) | 2.29 (.090) | 21.75 (.86) | 19.05 (.75) | 0.80 (.031) | 1.10 (.043) |
| D-150-C-12 | Red | 1.68 (.066) | 2.74 (.108) | 21.75 (.86) | 19.05 (.75) | 1.10 (.043) | 1.50 (.059) |
| D-150-C-13 | Blue | 2.13 (.084) | 3.43 (.135) | 21.75 (.86) | 19.05 (.75) | 1.50 (.059) | 2.30 (.090) |
| D-150-C-14 | Yellow | 3.34 (.133) | 4.80 (.189) | 21.75 (.86) | 19.05 (.75) | 2.30 (.090) | 2.80 (.110) |

**MATERIALS:**
1. MELTABLE ADHESIVES: Environment resistant modified thermoplastic fluoroelastomer. Color coded.
2. OUTER SLEEVE: Heat-shrinkable, transparent, radiation cross-linked modified fluoropolymer. Color coded.

**APPLICATION:**
1. These parts are designed to provide an environment resistant to repair damaged primary wire that have a radial crack up to 360 degrees, nicks/scrapes not longer than 1/4" on the insulation rated for 135˚C minimum and no damage to wire conductor. For insulation procedures, refer to RPIP 1101.
2. Install using TE approved convection or infrared heating tools in accordance with TE. When installed with approved convection or infrared heating tools, assemblies will meet the performance requirements of TE D-6201 specification. Infrared tools are not recommended for use with black cable jackets.
3. Temperature range: -65˚C to +180˚C. Product will withstand continuous temperature of 150˚C for a period of 500 hours, and continuous temperature of 180˚C for a period of 168 hours.

**NOTE***: If the O.D. of the wire is out of the range that is specified in the Table, use the next size of C-Wrap up or down.

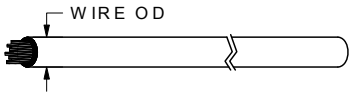

## Introduction

TE SolderTacts shielded contacts are designed to provide reliable, one-piece solder terminations for use with circular and rectangular connectors. These controlled soldering contacts help speed installation and reduce installed costs while eliminating the variables associated with hard-to-handle crimped terminations.

With TE's controlled soldering technology, the connections typically exceed the strength of the wire. Transparent insulation and inspection windows permit fully inspectable terminations.

SolderTacts products are available to terminate coaxial cable and twisted wire pairs in both military and commercial applications.



Dimensions are shown for reference purposes only. Specifications subject to change.

Dimensions are in millimeters unless otherwise specified.

USA: +1 800 522 6752
Asia Pacific: +86 0 400 820 6015
UK: +44 800 267 666

For additional support numbers please visit www.te.com

## SolderTacts Shielded One-Piece Solder Contacts

### Product Facts

- **Reliable one-piece solder contacts: through-connector shielding reduces cross-talk, and improves signal transmission**
- **One-step installation**
- **Solder joints are strong and reliable**
- **Terminations are fully inspectable**
- **Termination for coax cables, shielded wires, twisted pairs, triaxial cables, for a variety of commercial and military connectors**

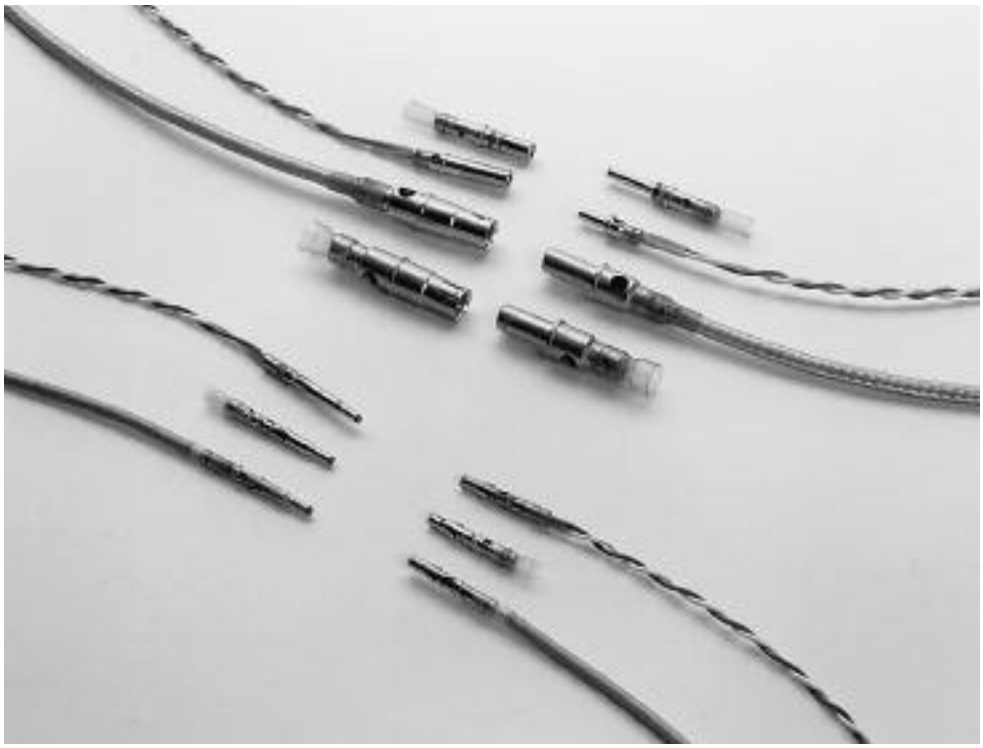

### Applications

One-piece controlled-soldering SolderTacts contacts connectors are designed to terminate coaxial cables, shielded wires, and twisted pairs faster and more reliably than any other method. SolderTacts contacts eliminate the variables associated with hard-to-handle crimping. Their one-step installation accelerates production while reducing handling and installed costs.

### Controlled Soldering

SolderTacts contacts provide the optimum amount and type of solder and flux in prefluxed solder preforms to control soldering and reduce operator sensitivity. The geometry of the coaxial cable is carried through the connector to eliminate separate pins, help reduce cross talk, and improve shielding effectiveness and signal transmission.

SolderTacts contacts provide simultaneous electrical connection and strain relief. Heat-shrinkable tubing insulations eliminate stress concentration on the wire within the contact. Because the insulation is transparent and inspection windows are provided, terminations are fully inspectable.

### Compatibility

The design versatility of SolderTacts contacts makes them exceptionally well suited to military applications, along with commercial aerospace, instrumentation and computers. SolderTacts products are compatible with most standard connector cavities. SolderTacts contacts are intermateable and intermountable with contacts qualified to the indicated specification.

SolderTacts shielded contacts can be terminated with standard TE heating tools. Once terminated, they can be installed into connector cavities with standard insertion and extraction tools. They are replaceable without cutting and restripping or shortening the cable.

### Specifications/Approvals

| Series | TE |
|---|---|
| D-602 | D-6002 |

| Available in: | |
|---|---|
| Americas | ■ |
| Europe | ■ |
| Asia Pacific | ■ |





Catalog 1654025
Revised 3-13

www.te.com

Dimensions are shown for reference purposes only. Specifications subject to change.

Dimensions are in millimeters unless otherwise specified.

USA: +1 800 522 6752
Asia Pacific: +86 0 400 820 6015
UK: +44 800 267 666

For additional support numbers please visit www.te.com

## SolderTacts Shielded One-Piece Solder Contacts (Continued)

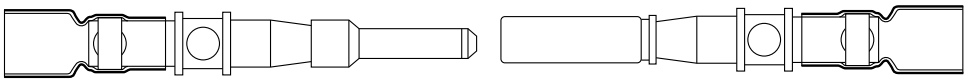

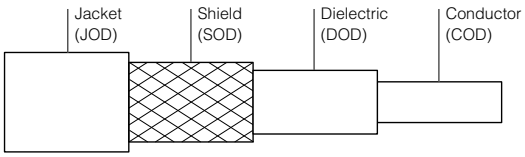


**SolderTacts Product Construction, MIL-C-26482 Series**

## SolderTacts Series: MIL-C-26482

| Contact Military Specification | Cable Diameter | | | | Wire (AWG) | TE SolderTacts Part No. | Size | Polarity | Cable Type |
|---|---|---|---|---|---|---|---|---|---|
| | JOD | SOD | DOD | COD | | | | | |
| MIS-20067/5-001† | 1.78–4.70 [.070–.185] | 1.65–2.79 [.065–.110] | .76–2.03 [.030–.080] | .23–.51 [.009–.020] | 24–32 | D-602-16 | 12 | S | Coaxial |
| MIS-20067/6-001† | 1.78–4.70 [.070–.185] | 1.65–2.79 [.065–.110] | .76–2.03 [.030–.080] | .23–.51 [.009–.020] | 24–32 | D-602-17 | 12 | P | Coaxial |
| — | 1.52–3.30 [.060–.130] | 1.68–2.13 [.066–.089] | .91–1.75 [.036–.069] | .30–.66 [.012–.026] | 24–30 | D-602-46 | 16 | P | Coaxial |
| — | 1.52–3.30 [.060–.130] | 1.68–2.13 [.066–.089] | .91–1.75 [.036–.069] | .30–.66 [.012–.026] | 26–32 | D-602-47 | 16 | S | Coaxial |
| — | — | — | .76–1.24 [.030–.049] | .28–.79 [.011–.031] | 24–30 | D-602-56 | 16 | P | Twinax |
| — | — | — | .76–1.24 [.030–.049] | .28–.79 [.011–.031] | 24–30 | D-602-57 | 16 | S | Twinax |

†These SolderTacts contacts are on qualified parts list for indicated specification.

## Tooling Selection Guide

| Part Numbers | Engineering Standard (Termination Instructions) | Convection (Hot Air) Heating AT-1319 Adapter | Repair Wand | Contact Insertion Tool | Contact Removal Tool |
|---|---|---|---|---|---|
| D-602-46/47 | ES61137 | AT-1319-17 | * | AD-1525 | AD-1526 |
| D-602-56/57 | ES61138 | — | — | (M81969/17-04) | (M81969/19-08) |
| D-602-16/17 | ES61161 | — | — | — | — |

*Could be developed.

**Note:**
AA-400 SuperHeater Compressed Air Heating Tool shown on page 10-2 can be used for installation. Another option is the Steinel® General Purpose Hot-Air Heating Tool shown on page 10-13.



Dimensions are shown for reference purposes only. Specifications subject to change.

Dimensions are in millimeters unless otherwise specified.

USA: +1 800 522 6752
Asia Pacific: +86 0 400 820 6015
UK: +44 800 267 666

For additional support numbers please visit www.te.com

## SolderTacts Shielded One-Piece Solder Contacts (Continued)

### SolderTacts Series: MIL-C-28748 Series

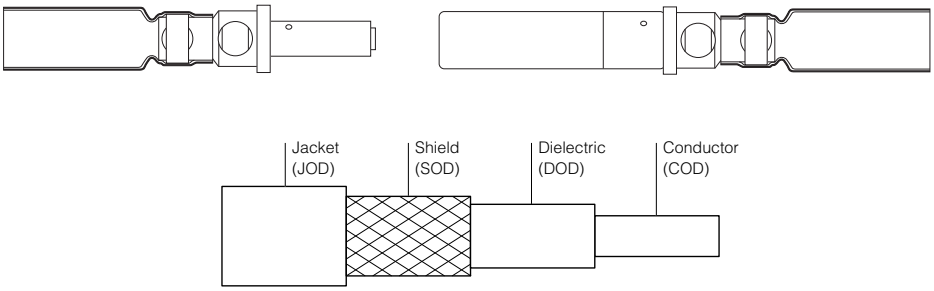


**SolderTacts product construction, MIL-C-28748 Series**

| Contact Military Specification | Cable Diameter | | | | Wire (AWG) | TE SolderTacts Part No. | Size | Polarity | Cable Type |
|---|---|---|---|---|---|---|---|---|---|
| | JOD | SOD | DOD | COD | | | | | |
| MIS-20067/2-002[a] | 1.52–3.35 [.060-.132] | 1.68–2.13 [.066-.084] | .91–1.78 [.036-.070] | .23–.89 [.009-.035] | 26–32 | D-602-44 | 16 | P | Coaxial |
| MIS-20067/1-001[a] | 1.52–3.35 [.060-.132] | 1.68–2.13 [.066-.084] | .91–1.78 [.036-.070] | .23–.89 [.009-.035] | 26–32 | D-602-45 | 16 | S | Coaxial |
| MIS-20067/4-001[a] | — | — | .76–1.24 [.030-.049] | .28–.79 [.011-.031] | 24–30 | D-602-54 | 16 | P | Twisted pair |
| MIS-20067/3-001[a] | — | — | .76–1.24 [.030-.049] | .28–.79 [.011-.031] | 24–30 | D-602-55 | 16 | S | Twisted pair |
| M39029/79[b] | 1.52–3.35 [.060-.132] | 1.68–2.13 [.066-.084] | .91–1.68 [.036-.066] | .30–.66 [.012-.026] | 26–32 | D-602-72 | 16 | P | Coaxial |
| M39029/80[b] | 1.52–3.35 [.060-.132] | 1.68–2.13 [.066-.084 ] | .91–1.68 [.036-.066] | .30–.66 [.012-.026] | 26–32 | D-602-73 | 16 | S | Coaxial |
| M39029/40[b] | 1.52–3.35 [.060-.132] | 1.68–2.13 [.066-.084 ] | .91–1.68 [.036-.066] | .30–.66 [.012-.026] | 26–32 | D-602-76 | 16 | P | Coaxial |
| M39029/41[b] | 1.52–3.35 [.060-.132] | 1.68–2.13 [.066-.084 ] | .91–1.68 [.036-.066] | .30–.66 [.012-.026] | 26–32 | D-602-77 | 16 | S | Coaxial |
| — | — | — | .76–1.24 [.030-.049] | .28–.79 [.011-.031] | 24–30 | D-602-0126 | 16 | P | Twisted pair[c] |
| — | — | — | .76–1.24 [.030-.049] | .28–.79 [.011-.031] | 24–30 | D-602-0127 | 16 | S | Twisted pair[c] |
| — | 1.52–3.35 [.060-.132] | 1.68–2.13 [.066-.084 ] | .91–1.78 [.036-.070] | .23–.46 [.009-.018] | 28–32 | D-602-0172 | 16 | P | Coaxial |
| MIS-20067/2-001, 003[a] | 1.52–3.35 [.060-.132] | 1.68–2.13 [.066-.084 ] | .91–1.78 [.036-.070] | .23–.46 [.009-.018] | 28–32 | D-602-0173 | 16 | S | Coaxial |
| MIS-20067/8-001[a] | — | — | 1.40–3.15 [.055-.124] | .64–1.57 [.025-.062] | 16–20 | D-610-09 | 16 | P | Power |
| MIS-20067/7-001[a] | — | — | 1.40–3.15 [.055-.124] | .64–1.57 [.025-.062] | 16–20 | D-610-10 | 16 | S | Power |

a These SolderTacts contacts are on the qualified parts list for indicated specification.
b These SolderTacts contacts are intermateable and intermountable with contacts qualified to the indicated specification; they replace crimp-style termination.
c These SolderTacts contacts are designed for twisted-pair cable per MIL-STD-1553B.







Dimensions are shown for reference purposes only. Specifications subject to change.

Dimensions are in millimeters unless otherwise specified.

USA: +1 800 522 6752
Asia Pacific: +86 0 400 820 6015
UK: +44 800 267 666

For additional support numbers please visit www.te.com

## SolderTacts Shielded One-Piece Solder Contacts (Continued)

### Tooling Selection Guide: MIL-C-28748 Series

| SolderTacts Series | Part No. | Engineering Standard (Termination Instructions) | Convection (Hot Air) Heating | |
|---|---|---|---|---|
| | | | AT-1319 Adapter | Repair Wand |
| 748 | D-602-44/45 | ES61133 | AT-1319-14 | AD-1480 |
| | D-602-0172/0173 | ES61240 | — | — |
| | D-602-54/55 | ES61132 | — | — |
| | D-602-0126/0127 | ES61199 | — | — |
| | D-610-09/10 | ES61187 | AT-1319-15 | AD-1571 |
| | D-602-72/73 | ES61135 | AT-1319-18 | AD-1486 |
| | D-602-76/77 | ES61164 | AT-1319-20 | AD-1554 |

| SolderTacts Series | Contact Insertion Tool | Contact Removal Tool | | Special Tools |
|---|---|---|---|---|
| 748 | * | AD-1447 | AD-1457A (bushing tool) | AD-1464 (flex tip removal tool) |

*Not applicable.

**Note:**
AA-400 SuperHeater Compressed Air Heating Tool shown on page 10-2 can be used for installation. Another option is the Steinel® General Purpose Hot-Air Heating Tool shown on page 10-13.



Dimensions are shown for reference purposes only. Specifications subject to change.

Dimensions are in millimeters unless otherwise specified.

USA: +1 800 522 6752
Asia Pacific: +86 0 400 820 6015
UK: +44 800 267 666

For additional support numbers please visit www.te.com

## SolderTacts Shielded One-Piece Solder Contacts (Continued)

### SolderTacts Series: MIL-C-38999, Series I, II, III, IV Circular Connectors

**SolderTacts Product Construction, MIL-C-38999 Series**

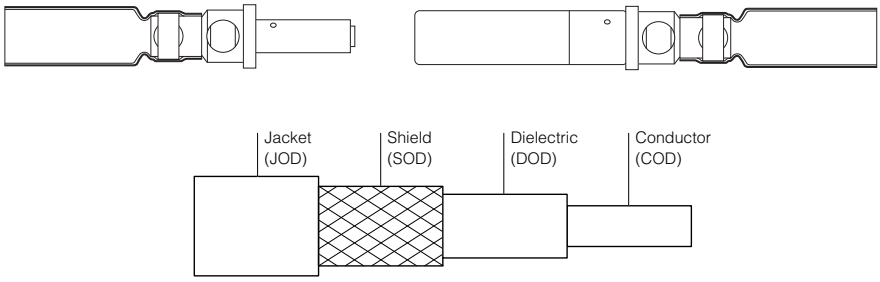


| Contact Military Specification | United States Air Force Drawing No. | Cable Diameter JOD | SOD | DOD | COD | Wire (AWG) | TE SolderTacts Part Number | Size | Polarity | Cable Type |
|---|---|---|---|---|---|---|---|---|---|---|
| **Series I, III, and IV** | | | | | | | | | | |
| M39029/60[a] | — | 3.81–5.94 [.150-.234] | 3.10–4.32 [.150-.170] | 1.52–3.84 [.060-.151] | .48–1.09 [.019-.043] | 22–24 | D-602-0122 | 8 | P | Coaxial |
| M39029/59[a] | — | 3.81–5.94 [.150-.234] | 3.10–4.32 [.150-.170] | 1.52–3.84 [.060-.151] | .48–1.09 [.019-.043] | 22–24 | D-602-0123 | 8 | S | Coaxial |
| M39029/76[a] | 915304-1 | 1.27–2.62 [.050-.103] | 1.68–2.13 [.066-.084] | .91–1.73 [.036-.068] | .23–.58 [.009-.023] | 26–30 | D-602-0140 | 16 | P | Coaxial |
| M39029/77[a] | 915305-1 | 1.27–2.62 [.050-.103] | 1.68–2.13 [.066-.084] | .91–1.73 [.036-.068] | .23–.58 [.009-.023] | 26–30 | D-602-0141 | 16 | S | Coaxial |
| M39029/76[a] | 915304-2 | — | — | .64–1.09 [.025-.043] | .23–.58 [.009-.023] | 26–30 | D-602-0142 | 16 | P | Twisted pair |
| M39029/77[a] | 915305-2 | — | — | .64–1.09 [.025-.043] | .23–.58 [.009-.023] | 26–30 | D-602-0143 | 16 | S | Twisted pair |
| M39029/28[a] | 915307-1 | 1.47–3.10 [.058-.122] | 1.68–2.39 [.066-.094] | 1.12–2.03 [.044-.080] | .48–.89 [.019-.035] | 24–32 | D-602-0144 | 12 | P | Coaxial |
| M39029/75[a] | 915308-1 | 1.47–3.10 [.058-.122] | 1.68–2.39 [.066-.094] | 1.12–2.03 [.044-.080] | .48–.89 [.019-.035] | 24–32 | D-602-0145 | 12 | S | Coaxial |
| M39029/28[a] | 915307-3 | — | — | .74–1.45 [.029-.057] | .48–.89 [.019-.035] | 22–26 | D-602-0146 | 12 | P | Twisted pair |
| M39029/75[a] | 915308-3 | — | — | .74–1.45 [.029-.057] | .48–.89 [.019-.035] | 22–26 | D-602-0147 | 12 | S | Twisted pair |
| M39029/28[a] | 915307-2 | 1.90–3.81 [.075-.150] | 2.54–2.97 [.100-.117] | 1.27–2.62 [.050-.103] | .48–.89 [.019-.035] | 22, 28 | D-602-0150 | 12 | P | Coaxial |
| M39029/75[a] | 915308-2 | 1.90–3.81 [.075-.150] | 2.54–2.97 [.100-.117] | 1.27–2.62 [.050-.103] | .48–.89 [.019-.035] | 22, 28 | D-602-0151 | 12 | S | Coaxial |
| — | 8340712-OS-01 | 2.49–3.42 [.098-.135] | 1.68–3.05 [.066-.120] | .76–1.24 [.030-.049] | .27–.79 [.011-.031] | 24–26 | D-602-1108 | 8 | S | Twisted pair[b] |
| — | 8340713-OS-01 | 2.49–3.42 [.098-.135] | 1.68–3.05 [.066-.120] | .76–1.24 [.030-.049] | .27–.79 [.011-.031] | 24–26 | D-602-1109 | 8 | P | Twisted pair[b] |
| — | — | 2.49–3.76 [.098-.148] | 1.68–3.30 [.066-.130] | .91–1.78 [.036-.070] | .23–.89 [.009-.035] | 22–26 | D-602-1110 | 8 | S | Triaxial |
| — | — | 2.49–3.76 [.098-.148] | 1.68–3.30 [.066-.130] | .91–1.78 [.036-.070] | .23–.89 [.009-.035] | 22–26 | D-602-1111 | 8 | P | Triaxial |
| — | 8340712-OL-01 | 2.49–3.42 [.098-.135] | 1.68–3.05 [.066-.120] | .76–1.24 [.030-.049] | .27–.79 [.011-.031] | 24–26 | D-602-1112 | 8 | S | Twisted pair[b] |
| — | 8340713-OL-01 | 2.49–3.42 [.098-.135] | 1.68–3.05 [.066-.120] | .76–1.24 [.030-.049] | .27–.79 [.011-.031] | 24–26 | D-602-1113 | 8 | P | Twisted pair[b] |
| M39029/90[a] | 8912020-OS-01 | 3.68 [.145 ] Max. | — | .64–1.29 [.029-.051] | .27–.74 [.011-.029] | 24–26 | DK-602-0156-N-1 | 8 | P | Twinaxial[c] |
| M39029/90[a] | 8912020-DL-01 | 4.11 [.162] Max. | — | .64–1.29 [.029-.051] | .27–.74 [.011-.029] | 24–26 | DK-602-0156-N-2 | 8 | P | Twinaxial[c] |

a These SolderTacts contacts are intermateable and intermountable with contacts qualified to indicated specification; they replace crimp-style termination.
b These SolderTacts contacts are designed for shielded twisted pair cable per MIL-STD-1553B.
c These SolderTacts contacts are designed for databus contacts per MIL-STD-1553B.







Dimensions are shown for reference purposes only. Specifications subject to change.

Dimensions are in millimeters unless otherwise specified.

USA: +1 800 522 6752
Asia Pacific: +86 0 400 820 6015
UK: +44 800 267 666

For additional support numbers please visit www.te.com

## SolderTacts Shielded One-Piece Solder Contacts (Continued)

### SolderTacts Series: MIL-C-38999, Series I, II, III, IV Circular Connectors
(Continued)

| Contact Military Specification | United States Air Force Drawing No. | Cable Diameter (in inches) | | | | Wire (AWG) | TE SolderTacts Part Number | Size | Polarity | Cable Type |
|---|---|---|---|---|---|---|---|---|---|---|
| | | JOD | SOD | DOD | COD | | | | | |
| **Series I, III, and IV** | | | | | | | | | | |
| M39029/90[a] | 8912020-EL-01 | 4.50 max. [.177] | — | .74-1.30 [.029–.051] | .24-.74 [.011–.029] | 24–26 | DK-602-0156-N-3 | 8 | P | Twinaxial[c] |
| M39029/91[a] | 8912019-OS-01 | 3.68 max. [.145] | — | .74-1.30 [.029–.051] | .24-.74 [.011–.029] | 24–26 | DK-602-0157-N-1 | 8 | S | Twinaxial[c] |
| M39029/91[a] | 8912019-DL-01 | 4.12 max. [.162] | — | .74-1.30 [.029–.051] | .24-.74 [.011–.029] | 24–26 | DK-602-0157-N-2 | 8 | S | Twinaxial[c] |
| M39029/91[a] | 8912019-EL-01 | 4.50 max. [.177] | — | .74-1.30 [.029–.051] | .24-.74 [.011–.029] | 24–26 | DK-602-0157-N-3 | 8 | S | Twinaxial[c] |
| M39029/90[a] | 8912020-OL-01 | 4.67 max. [.184] | — | — | — | 20 | DK-602-0169-1 | 8 | P | Twinaxial[c] |
| M39029/91[a] | 8912019-OL-01 | 4.67 max. [.184] | — | — | — | 20 | DK-602-0170-1 | 8 | S | Twinaxial[c] |
| **Series II** | | | | | | | | | | |
| M39029/76[a] | 915304-1 | 1.27-2.62 [.050–.103] | 1.68-2.13 [.066–.084] | .91-1.73 [.036–.068] | .23-.58 [.009–.023] | 26–30 | D-602-0140 | 16 | P | Coaxial |
| M39029/77[a] | 915306-1 | 1.27-2.62 [.050–.103] | 1.68-2.13 [.066–.084] | .91-1.73 [.036–.068] | .23-.58 [.009–.023] | 26–30 | D-602-0171 | 16 | S | Coaxial |
| M39029/76[a] | 915304-2 | — | — | .64-1.09 [.025–.043] | .23-.58 [.009–.023] | 26–30 | D-602-0142 | 16 | P | Twisted pair |
| M39029/77[a] | 915306-2 | — | — | .64-1.07 [.025–.042] | .23-.58 [.009–.023] | 26–30 | D-602-0174 | 16 | S | Twisted pair |

a These SolderTacts contacts are intermateable and intermountable with contacts qualified to indicated specification; they replace crimp-style termination.
b These SolderTacts contacts are designed for shielded twisted pair cable per MIL-STD-1553B.
c These SolderTacts contacts are designed for databus contacts per MIL-STD-1553B.

### Tooling Selection Guide

| SolderTacts Series | Part Numbers (D-602-) | Engineering Standard (Termination Instructions) | Convection (Hot Air) Heating AT-1319 Adapter | Repair Wand | Contact Insertion Tool | Contact Removal Tool* |
|---|---|---|---|---|---|---|
| 999 Size 16 | 0140/0141 | ES61226 | AT-1319-78 | AD-1565 | M81969/8-07 or M81969/14-03 | M81869/8-08 or M81969/14-03 |
| | 0142/0143 | ES61224 | — | — | | |
| | 0171 | ES61226 | AT-1319-27 | AD-1572 | | |
| | 0174 | ES61224 | — | — | | |
| 999 Size 12 | 0144/0145 | ES61206 | AT-1319-24 | AD-1566 | M81969/8-09 or M81969/14-04 | M81969/8-10 or M81969/14-04 |
| | 0146/0147 | ES61218 | — | — | | |
| | 0150/0151 | ES61223 | — | — | | |
| 999 Size 8 | 0122/0123 | ES61179 | AT-1319-22 | AD-1568 | — | M81969/14-06 or Astro ATBX-2277 |
| | 1108/1109 | ES61172 | AT-1319-22 and AT-1319-14 | — | | |
| | 1110/1111 | ES61172 | | AD-1568 and AD-1480 | | |
| | 1112/1113 | ES61184 | | | | |
| | 0156/0157-X | ES61231 | | | | |
| | 0169/0170-X | ES61235 | | | | |

*TE does not provide this tool. See connector manufacturer.

**Note:**
AA-400 SuperHeater Compressed Air Heating Tool shown on page 10-2 can be used for installation. Another option is the Steinel® General Purpose Hot-Air Heating Tool shown on page 10-13.



Dimensions are shown for reference purposes only. Specifications subject to change.

Dimensions are in millimeters unless otherwise specified.

USA: +1 800 522 6752
Asia Pacific: +86 0 400 820 6015
UK: +44 800 267 666

For additional support numbers please visit www.te.com

## SolderTacts Shielded One-Piece Solder Contacts (Continued)

### SolderTacts Series: Subminiature*

**SolderTacts Product Construction, Submin Series**

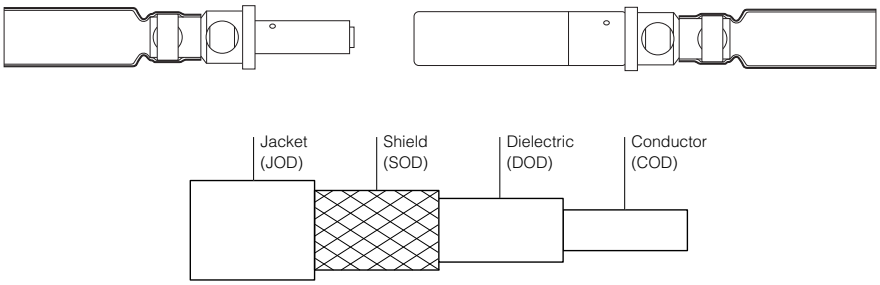


### Cable Diameter

| SolderTacts | Size | Polarity | Cable Type | Cable Diameter | | | | |
|---|---|---|---|---|---|---|---|---|
| | | | | JOD | SOD | DOD | COD | (AWG) |
| D-602-0278 | 16 | P | Coaxial | 1.52–2.92 [.060-.115] | 1.85–2.18 [.073-.086] | .64–1.91 [.025-.075] | .23–.74 [.009-.029] | 24–32 |
| D-602-0279 | 16 | S | Coaxial | 1.52–2.92 [.060-.115] | 1.85–2.18 [.073-.086] | .64–1.91 [.025-.075] | .23–.74 [.009-.029] | 24–32 |
| D-602-0288 | 16 | P | Twisted pair | — | — | .74–1.40 [.029-.055] | .23–.74 [.009-.029] | 24–32 |
| D-602-0289 | 16 | S | Twisted pair | — | — | .74–1.40 [.029-.055] | .23–.74 [.009-.029] | 24–32 |

*These SolderTacts contacts belong to the TE “Subminiature” series of contacts, which are designed for use in commercial connectors.

### Tooling Selection Guide

| SolderTacts Series | Part Numbers (D-602-) | Engineering Standard (Termination Instructions) | Convection (hot air) Heating AT-1319 Adapter | Repair Wand | Contact Insertion Tool | Contact Removal Tool |
|---|---|---|---|---|---|---|
| Submin | 0278/0279 | ES61170 | AT-1319-12 | AD-1481 | * | AD-1447 |
| — | 0288/0289 | ES61414 | — | — | — | — |

*Not applicable.

**Note:**
AA-400 SuperHeater Compressed Air Heating Tool shown on page 10-2 can be used for installation. Another option is the Steinel® General Purpose Hot-Air Heating Tool shown on page 10-13.

## SolderTacts Shielded One-Piece Solder Contacts (Continued)

### SolderTacts Series: MIL-C-83723

| Contact Military Specification* | Cable Diameter | | | | Wire (AWG) | TE SolderTacts | Size | Polarity | Cable Type |
|---|---|---|---|---|---|---|---|---|---|
| | JOD | SOD | DOD | COD | | | | | |
| M39029/74-400 | 2.39–3.56 [.094-.140] | 1.96–2.49 [.077-.098] | 1.32–2.06 [.052-.081] | .28–.74 [.011-.029] | 24–32 | D-602-0094 | 12 | P | Coaxial |
| M39029/73-397 | 2.39–3.56 [.094-.140] | 1.96–2.49 [.077-.098] | 1.32–2.06 [.052-.081] | .28–.74 [.011-.029] | 24–32 | D-602-0095 | 12 | S | Coaxial |
| M39029/74-401 | — | — | .74–1.45 [.029-.057] | .28–.74 [.011-.029] | 24–32 | D-602-0104 | 12 | P | Twisted pair |
| M39029/73-398 | — | — | .74–1.45 [.029-.057] | .28–.74 [.011-.029] | 24–32 | D-602-0105 | 12 | S | Twisted pair |
| M39029/74-399 | 3.05–3.68 [.120-.145] | 3.10–3.15 [.122-.124] | 2.36–2.67 [.093-.105] | .28–.74 [.011-.029] | 24–32 | D-602-0106 | 12 | P | Large coaxial |
| M39029/73-396 | 3.05–3.68 [.120-.145] | 3.10–3.15 [.122-.124] | 2.36–2.67 [.093-.105] | .28–.74 [.011-.029] | 24–32 | D-602-0107 | 12 | S | Large coaxial |

* These SolderTacts contacts are on qualified parts list for indicated specification.

### Tooling Selection Guide

| TE SolderTacts Part Number | Engineering Standard (Termination Instructions) | Convection (Hot Air) Heating AT-1319 Adapter | Repair Wand | Contact Insertion Tool | Contact Removal Tool | Special Tools |
|---|---|---|---|---|---|---|
| D-602-0094/0095 | ES61128 | AT-1319-19 | AD-1494 | AD-1527 | AD-1527 | AD-1496 |
| D-602-0106/0107 | ES61134 | Rev. D | Rev. C | (M81969/14-04) | (M81969/14-04) | (twisted) |
| D-602-0104/0105 | ES61129 | — | — | — | — | — |

**Note:**
AA-400 SuperHeater Compressed Air Heating Tool shown on page 10-2 can be used for installation. Another option is the Steinel® General Purpose Hot-Air Heating Tool shown on page 10-13.

### SolderTacts Series: DOD-C-83527

| SolderTacts Reference | Size | Polarity | Cable Type | Contact Military Specification |
|---|---|---|---|---|
| D-602-0185 | 16 | socket | Coaxial | — |
| D-602-0094 | 12 | pin | Coaxial | M39029/74 |
| D-602-0093* | 12 | socket | Coaxial | M39029/73 |
| D-602-0106 | 12 | pin | Coax (large) | M39029/74 |
| D-602-0189* | 12 | socket | Coax (large) | M39029/73 |

*These SolderTacts contacts are intermateable with M39029/73, but are not on QPL.

### SolderTacts Series: DOD-C-83527 (data bus contacts)**

| SolderTacts Reference | Size | Polarity | Cable Type | Contact Military Specification |
|---|---|---|---|---|
| D-602-0186 | 8 | pin | Twisted pair | M39029/96 |
| D-602-0187 | 8 | socket | Twisted pair | M39029/95 |
| DK-602-0186-2 | 8 | pin | Sh. twisted pair | M39029/96 |
| DK-602-0187-2 | 8 | socket | Sh. twisted pair | M39029/95 |

** These SolderTacts contacts are designed for shielded twisted pair cable per MIL-STD-1553B.



Dimensions are shown for reference purposes only. Specifications subject to change.

Dimensions are in millimeters unless otherwise specified.

USA: +1 800 522 6752
Asia Pacific: +86 0 400 820 6015
UK: +44 800 267 666

For additional support numbers please visit www.te.com

## SolderTacts Shielded One-Piece Solder Contacts (Continued)

### SolderTacts Series: Grommets

| SolderTacts Reference | Size | Polarity |
|---|---|---|
| D-600-0071 | — | For shielded twisted pair |
| D-600-0116 | For size 8 DOD-C-83527 series | — |
| D-600-0125 | For size 8 MIL-C-38999 series, for twisted pair | — |

### Performance

The performance of SolderTacts contacts is defined by the applicable TE specification control drawing (SCD) and TE Specification D-6002. Products on qualified product lists meet the requirements of the base specification.

### Termination

Termination of SolderTacts contacts is defined in the appropriate TE Engineering Standard. To obtain a copy, contact TE.







Dimensions are shown for reference purposes only. Specifications subject to change.

Dimensions are in millimeters unless otherwise specified.

USA: +1 800 522 6752
Asia Pacific: +86 0 400 820 6015
UK: +44 800 267 666

For additional support numbers please visit www.te.com

## Introduction

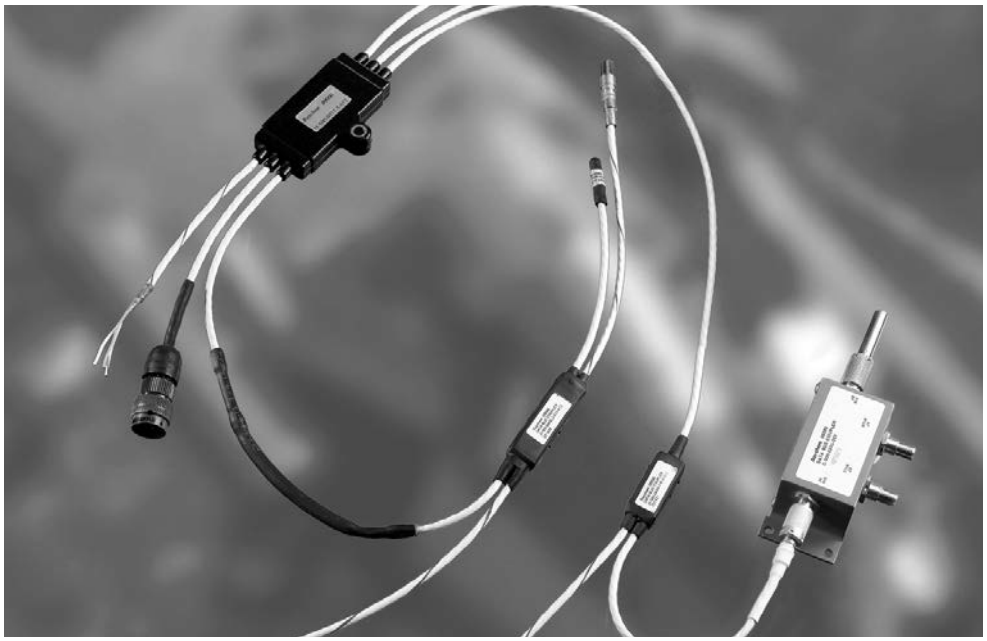

The full line of TE data bus products offers a complete system of interconnection hardware for all MIL-STD-1553B multiplexing needs.

Available components include:

- Couplers (micro's, boxes, flat packs)
- Data bus cables
- Triax connectors and contacts with strain relief
- One-piece triaxial contacts for MIL-C-38999 connectors (size 8 cavity)
- Bus and stub terminators
- Cable marker sleeves (TMS)
- Lightweight couplers
- Space components
- Harness design (Harn*Ware* software)

All TE brand data bus components offer:

- High packaging density and weight savings
- Design flexibility
- High performance (to 150°C [302°F] rating)

MIL-STD-1553B data bus components are also specified in the Air Force drawings listed in Air Force Drawing 8340707.

TE also supplies complete data bus networks in accordance with customer harness drawings. Using factory-built harnesses eliminates unnecessary splices and connectors, reducing the cost and increasing the reliability of the networks. Factory-built harnesses are pre-tested and ready for installation.



Dimensions are shown for reference purposes only. Specifications subject to change.

Dimensions are in millimeters unless otherwise specified.

USA: +1 800 522 6752
Asia Pacific: +86 0 400 820 6015
UK: +44 800 267 666

For additional support numbers please visit www.te.com

## Cables

### Product Facts

- Light weight
- Highly flexible
- Flame resistant
- Chemical resistant to all aircraft fluids
- Solder iron resistant
- Defined shielding performance

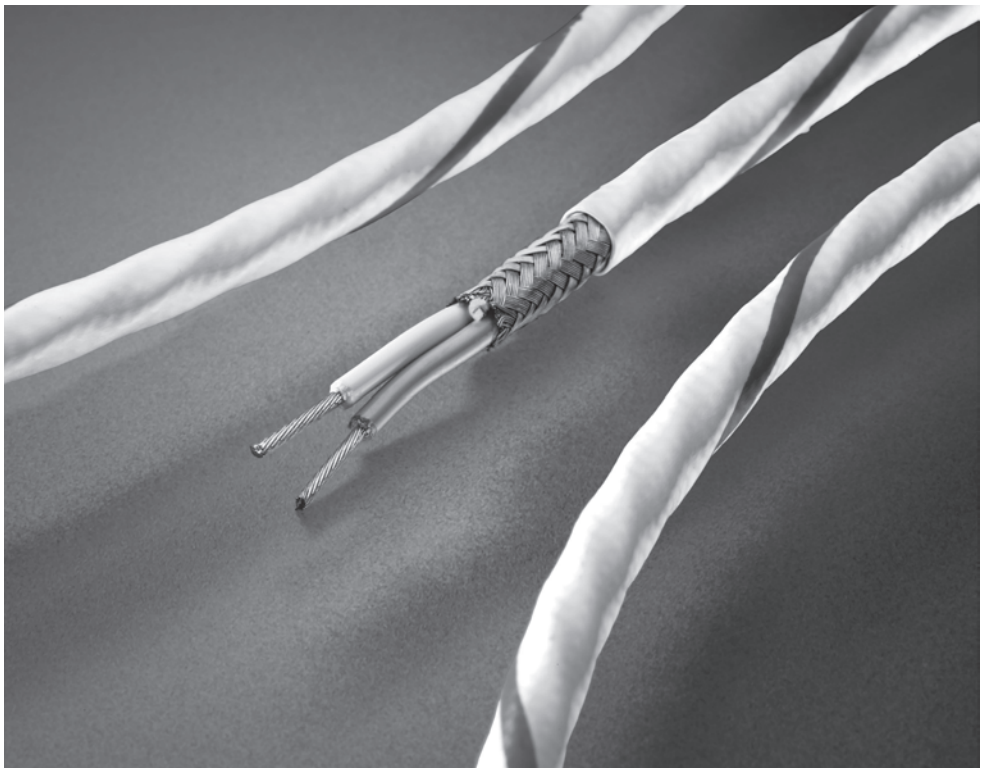

### Applications

TE manufactures a line of SPEC 55 data bus cables that meet or exceed the performance requirements of MIL-STD-1553B.

SPEC 55 insulation is a high-temperature, radiation-crosslinked, modified ETFE material that can be used in wire constructions rated up to 200°C [392°F].

**Note:** TE will build harnesses with any customer specified cables and/or connectors.





Catalog 1654025
Revised 3-13

www.te.com

Dimensions are shown for reference purposes only. Specifications subject to change.

Dimensions are in millimeters unless otherwise specified.

USA: +1 800 522 6752
Asia Pacific: +86 0 400 820 6015
UK: +44 800 267 666

For additional support numbers please visit www.te.com

## Cables (Continued)

### Specifications/Approvals

| Series | Military |
|---|---|
| SPEC 55 insulation | MIL-AS27500/32–/35<br>MIL-AS27500/41–/46 |

### Product Selection

| Cable Type | | Part No. |
|---|---|---|
| 24 AWG Single Optimized Shield | | 10612 |
| 24 AWG Double Optimized Shield | | 10613 |
| 24 AWG EMP Hardened | | 10614 |

## In-Line Microcouplers: One- and Two-Stub

### Product Facts

- Environmental sealing
- No connectors
- Very small size
- Light weight (1 stub: 10 g max.; 2 stubs: 15 g max.)
- In-line profile that makes wire bundle mounting possible
- 360° continuous low-impedance cable-shield terminations
- Reliable solder termination of all components
- Potted circuit elements for maximum durability and in-use reliability
- Ease of installation
- Altitude immersion resistance
- Optional eyelet configurations for bulkhead mounting
- Mean time between failures > 1,000,000 hours

### Applications

The low-profile configuration of these couplers enables avionics system designers to plan for optimum coupler locations. Microcouplers are supplied with SPEC 55 data bus cables, including EMP-hardened versions. They are also available assembled with other components into a complete data bus harness.

### Specifications/Approvals

| Series | Military | TE |
|---|---|---|
| D-500-04 | MIL-STD-1553B | D-6020 |

| Available in: | |
|---|---|
| Americas | ■ |
| Europe | ■ |
| Asia Pacific | ■ |





Catalog 1654025
Revised 3-13

www.te.com

Dimensions are shown for reference purposes only. Specifications subject to change.

Dimensions are in millimeters unless otherwise specified.

USA: +1 800 522 6752
Asia Pacific: +86 0 400 820 6015
UK: +44 800 267 666

For additional support numbers please visit www.te.com

## In-Line Microcouplers: One- and Two-Stub (Continued)

### Product Selection

| Single Stub | | Double Stub | |
|---|---|---|---|
| D-500-0455-1-YYY-ZZZ | | D-500-0455-2-YYY-ZZZ | 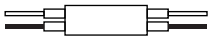 |
| D-500-0465-1-YYY-ZZZ | 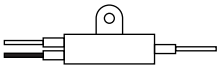 | D-500-0465-2-YYY-ZZZ | 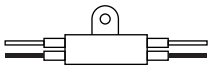 |
| D-500-0456-1-YYY-ZZZ | | D-500-0456-2-YYY-ZZZ | |
| D-500-0466-1-YYY-ZZZ | 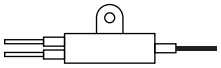 | D-500-0466-2-YYY-ZZZ | 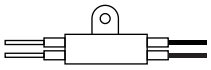 |
| D-500-0457-1-YYY-ZZZ | 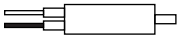 | D-500-0457-2-YYY-ZZZ | 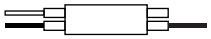 |
| D-500-0467-1-YYY-ZZZ | 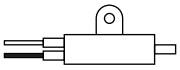 | D-500-0467-2-YYY-ZZZ | 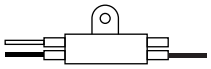 |
| D-500-0458-1-YYY-ZZZ | 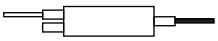 | D-500-0458-2-YYY-ZZZ | 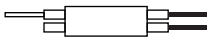 |
| D-500-0468-1-YYY-ZZZ | 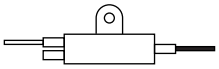 | D-500-0468-2-YYY-ZZZ | 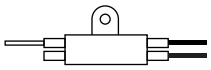 |

**Note:**
1. Bus cable
2. Stub cable



Dimensions are shown for reference purposes only. Specifications subject to change.

Dimensions are in millimeters unless otherwise specified.

USA: +1 800 522 6752
Asia Pacific: +86 0 400 820 6015
UK: +44 800 267 666

For additional support numbers please visit www.te.com

## In-Line Microcouplers: One- and Two-Stub (Continued)

### Microcoupler Part Numbering System

**D-500-04W W-X-YYY-ZZZ**

**Standard Cable Length**
012 = 12 in (1 ft)
078 = 78 in (6.5 ft)
079 = 79 in (2 m)
120 = 120 in (10 ft)
236 = 236 in (6 m)
240 = 240 in (20 ft)

**Cable Type**
612 = 10612 (24 AWG single optimized shield )
613 = 10613 (24 AWG double optimized shield)
614 = 10614 (24 AWG EMP hardened)

**Number of Stubs**
1 or 2

**Design**
5 = Without internal terminator
6 = Same as 5 but with reverse bus
7 = With internal terminator
8 = Same as 7 but with reverse bus

**Boot**
5 = Without mounting eyelet
6 = With mounting eyelet





Catalog 1654025
Revised 3-13

www.te.com

Dimensions are shown for reference purposes only. Specifications subject to change.

Dimensions are in millimeters unless otherwise specified.

USA: +1 800 522 6752
Asia Pacific: +86 0 400 820 6015
UK: +44 800 267 666

For additional support numbers please visit www.te.com

## Ultra Lightweight In-Line Microcouplers 1- Through 6-Stub

### Product Facts

- Environmental sealing
- No connectors
- Very small size
- Ultra Light weight (1 stub: 6.5 g max.; 2 stubs: 9.5 g max.)
- In-line profile that makes wire bundle mounting possible
- 360° continuous low-impedance cable-shield terminations
- Reliable solder termination of all components
- Potted circuit elements for maximum durability and in-use reliability
- Ease of installation
- Altitude immersion resistance
- Mean time between failures > 1,000,000 hours

### Applications

Building on over 20 years of experience and continuous improvement in data bus, including pioneering in-line microcouplers, TE introduces a new family of ultra light-weight In-line micro-couplers, available in 1- through 6-stub configurations.

These couplers offer the same high performance and reliability as current microcouplers, but their weight is further reduced. They are available in configurations up to 6-stub, and to minimize weight; there is no option with a mounting eyelet.

Combined with TE 24 AWG or 26 AWG data bus cables, these ultra light couplers allow designers to significantly reduce weight.

They are also available assembled with other customer specified components into a complete factory-built and tested data bus harness.

### Specifications/approvals

| Series | Military | TE |
|---|---|---|
| D-500-L4xx | MIL-STD-1553B | D-6020 (same as current microcouplers) |

| Available in: | |
|---|---|
| Americas | ■ |
| Europe | ■ |
| Asia Pacific | ■ |



Catalog 1654025
Revised 3-13

www.te.com

Dimensions are shown for reference purposes only. Specifications subject to change.

Dimensions are in millimeters unless otherwise specified.

USA: +1 800 522 6752
Asia Pacific: +86 0 400 820 6015
UK: +44 800 267 666

For additional support numbers please visit www.te.com

## Lightweight In-Line Couplers Part Numbering System

**D-500-L4 5 W -X -YYY -ZZZ**

**Cable Length**
012 = 12 in  079 = 79 in  236 = 236 in
078 = 78 in  120 = 120 in  240 = 240 in

**Cable Type**
612 = 10612 (24 AWG single optimized shield)
613 = 10613 (24 AWG double optimized shield)
614 = 10614 (24 AWG EMP hardened)

**Number of Stubs**
1, 2, 3, 4, 5 or 6

**Design**
5 = Without internal terminator
6 = Same as 5 but with reverse bus
7 = With internal terminator
8 = Same as 7 but with reverse bus

**Style**
5 = Without eyelet





Catalog 1654025
Revised 3-13

www.te.com

Dimensions are shown for reference purposes only. Specifications subject to change.

Dimensions are in millimeters unless otherwise specified.

USA: +1 800 522 6752
Asia Pacific: +86 0 400 820 6015
UK: +44 800 267 666

For additional support numbers please visit www.te.com

## Ultra Lightweight In-Line Microcouplers 1- Through 6-Stub (Continued)

### Product Selection

#### D-500-L455-X-YYY-ZZZ

| End View Left Side | | End View Right Side |
|---|---|---|
| | 1 stub | |
| | 2 stub | |
| | 3 stub | |
| | 4 stub | |
| | 5 stub | |
| | 6 stub | |

#### D-500-L456-X-YYY-ZZZ

| End View Left Side | | End View Right Side |
|---|---|---|
| | 1 stub | |
| | 2 stub | |
| | 3 stub | |
| | 4 stub | |
| | 5 stub | |
| | 6 stub | |

#### D-500-L457-X-YYY-ZZZ

| End View Left Side | | End View Right Side |
|---|---|---|
| | 1 stub | |
| | 2 stub | |
| | 3 stub | |
| | 4 stub | |
| | 5 stub | |
| | 6 stub | |

#### D-500-L458-X-YYY-ZZZ

| End View Left Side | | End View Right Side |
|---|---|---|
| | 1 stub | |
| | 2 stub | |
| | 3 stub | |
| | 4 stub | |
| | 5 stub | |
| | 6 stub | |

**Legend**
Bus cable ○
Stub cable ●



Dimensions are shown for reference purposes only. Specifications subject to change.

Dimensions are in millimeters unless otherwise specified.

USA: +1 800 522 6752
Asia Pacific: +86 0 400 820 6015
UK: +44 800 267 666

For additional support numbers please visit www.te.com

## Box Couplers

### Product Facts

- **Light, robust coupler modules with connector versatility**
- **Up to eight stub connectors can be arrayed on the "face" of the box coupler. Bus connectors can also be on the "face" or on the "side" of the box**
- **Designed with TE brand D-621 series corrosion-resistant threaded-type or bayonet-type connectors**

### Applications

The multiport capability of these couplers (up to eight stubs) enables avionics system designers to interconnect black boxes with minimum wire runs. Box couplers are supplied with triaxial threaded or bayonet connectors.

**Note:** TE also designs and manufactures customized data bus box couplers.

### Specifications/Approvals

| Series | Military | TE |
|---|---|---|
| D-500-0255 | MIL-STD-1553 | D-6021 |

**Available in:**

| | |
|---|---|
| Americas | ■ |
| Europe | ■ |
| Asia Pacific | ■ |





Catalog 1654025
Revised 3-13

www.te.com

Dimensions are shown for reference purposes only. Specifications subject to change.

Dimensions are in millimeters unless otherwise specified.

USA: +1 800 522 6752
Asia Pacific: +86 0 400 820 6015
UK: +44 800 267 666

For additional support numbers please visit www.te.com

## Box Couplers (Continued)

### Product Selection

| Coupler Type | Part No. | | | |
|---|---|---|---|---|
| | Threaded | Bayonet A* | Bayonet B* | Bayonet C* |
| Face - 1 Stub | D-500-0255-511-1 | D-500-0255-513-1 | D-500-0255-515-1 | D-500-0255-517-1 |
| Face - 2 Stub | D-500-0255-521-1 | D-500-0255-523-1 | D-500-0255-525-1 | D-500-0255-527-1 |
| Face - 3 Stub | D-500-0255-531-1 | D-500-0255-533-1 | D-500-0255-535-1 | D-500-0255-537-1 |
| Face - 4 Stub | D-500-0255-541-1 | D-500-0255-543-1 | D-500-0255-545-1 | D-500-0255-547-1 |
| Face - 5 Stub | D-500-0255-551-1 | D-500-0255-553-1 | D-500-0255-555-1 | D-500-0255-557-1 |
| Face - 6 Stub | D-500-0255-561-1 | D-500-0255-563-1 | D-500-0255-565-1 | D-500-0255-567-1 |
| Face - 7 Stub | D-500-0255-571-1 | D-500-0255-573-1 | D-500-0255-575-1 | D-500-0255-577-1 |
| Face - 8 Stub | D-500-0255-581-1 | D-500-0255-583-1 | D-500-0255-585-1 | D-500-0255-587-1 |
| | | | | |
| Side - 1 Stub | D-500-0255-512-1 | D-500-0255-513-2 | D-500-0255-515-2 | D-500-0255-517-2 |
| Side - 2 Stub | D-500-0255-522-1 | D-500-0255-523-2 | D-500-0255-525-2 | D-500-0255-527-2 |
| Side - 3 Stub | D-500-0255-532-1 | D-500-0255-533-2 | D-500-0255-535-2 | D-500-0255-537-2 |
| Side - 4 Stub | D-500-0255-542-1 | D-500-0255-543-2 | D-500-0255-545-2 | D-500-0255-547-2 |
| Side - 5 Stub | D-500-0255-552-1 | D-500-0255-553-2 | D-500-0255-555-2 | D-500-0255-557-2 |
| Side - 6 Stub | D-500-0255-562-1 | D-500-0255-563-2 | D-500-0255-565-2 | D-500-0255-567-2 |
| Side - 7 Stub | D-500-0255-572-1 | D-500-0255-573-2 | D-500-0255-575-2 | D-500-0255-577-2 |
| Side - 8 Stub | D-500-0255-582-1 | D-500-0255-583-2 | D-500-0255-585-2 | D-500-0255-587-2 |

*The bayonet polarization listed is for the bus connector. All stub connectors are Bayonet D polarization. Polarizations are depicted as follows (jack view):

Dimensions are shown for reference purposes only. Specifications subject to change.

Dimensions are in millimeters unless otherwise specified.

USA: +1 800 522 6752
Asia Pacific: +86 0 400 820 6015
UK: +44 800 267 666

For additional support numbers please visit www.te.com

## Discrete Connectors

### Product Facts

- Compliance with MIL-STD-1553B hardware requirements
- Light weight
- Removable pin or socket contacts
- Termination with MIL-STD-1553B data bus cables, including EMP-hardened versions
- Continuous 360° shield coverage
- Rugged constructions
- Termination time of 1 to 2 minutes
- Inspectable solder terminations
- Low-skill assembly
- Reworkable and repairable terminations
- Strain relief built into the design
- Low-voltage drop and high reliability because of precisely controlled solder terminations
- Threaded and bayonet coupling styles
- Low total installed cost
- 1000-hour salt spray resistance
- Lower-cost connectors, for benchtop and mock-up

### Applications

Designed specifically for MIL-STD-1553B data bus applications, the D-621 connector is intended to be a perfect match for the TE airworthy data bus cable. Together they provide durable, reliable, and reworkable interconnection hardware for the MIL-STD-1553B market.

### Specifications/Approvals

| Series | Military | TE |
|---|---|---|
| DK-621 | MIL-STD-1553B | D-6025 |

| Available in: | |
|---|---|
| Americas | ■ |
| Europe | ■ |
| Asia Pacific | ■ |





Catalog 1654025
Revised 3-13

www.te.com

Dimensions are shown for reference purposes only. Specifications subject to change.

Dimensions are in millimeters unless otherwise specified.

USA: +1 800 522 6752
Asia Pacific: +86 0 400 820 6015
UK: +44 800 267 666

For additional support numbers please visit www.te.com

## Discrete Connectors (Continued)

### Connector Kit Part Numbering System

**DK-621-04 XX-XX**

**Contact (supplied in DK-621 kits only)**
P = Pin
S = Socket

**Polarization (bayonet styles only) (jack view)**

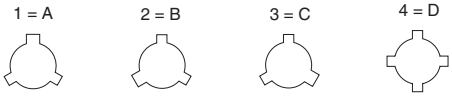


**Basic Connector Configurations**
*Threaded styles*
11 = Plug
12 = Jack
*Bayonet styles*
33 = Plug, A polarization
34 = Jack, A polarization
35 = Plug, B polarization
36 = Jack, B polarization
37 = Plug, C polarization
38 = Jack, C polarization
39 = Plug, D polarization
40 = Jack, D polarization

**D-621 connector, kitted with accessories**

**Example:**

DK-621-0434-1P = D-621 connector, kitted with accessories, jack bayonet style with A polarization and pin contact.



Catalog 1654025
Revised 3-13

www.te.com

Dimensions are shown for reference purposes only. Specifications subject to change.

Dimensions are in millimeters unless otherwise specified.

USA: +1 800 522 6752
Asia Pacific: +86 0 400 820 6015
UK: +44 800 267 666

For additional support numbers please visit www.te.com

## Accessories

### Product Facts

- **A single source for all harness components**
- **Products designed to work together**

### Applications

TE manufactures all the products needed to build a MIL-STD-1553B data bus network. In addition to the main components (couplers, connectors, contacts, and cables), TE supplies the accessory components that may be necessary to complete a data bus system.

These include:

- Bus and stub terminators (spliced-in and connectorized D-621 series).
- Cable splice kits.
- EMI/environment-resistant connector caps.
- Braid terminators and strain relief tubing (for rework applications).
- Cable marking materials.

| Available in: | |
|---|---|
| Americas | ■ |
| Europe | ■ |
| Asia Pacific | ■ |





Catalog 1654025
Revised 3-13

www.te.com

Dimensions are shown for reference purposes only. Specifications subject to change.

Dimensions are in millimeters unless otherwise specified.

USA: +1 800 522 6752
Asia Pacific: +86 0 400 820 6015
UK: +44 800 267 666

For additional support numbers please visit www.te.com

## Accessories (Continued)

### Product Selection

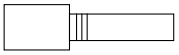

D-621 Plug

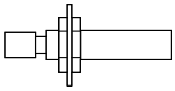

D-621 Jack

Splice-in

### Bus and Stub Terminators

| Spliced-in | 12-inch Cable |
|---|---|
| 77-ohm 10612 cable | D-500-0463-612 |
| 77-ohm 10613 cable | D-500-0463-613 |
| 77-ohm 10614 cable | D-500-0463-614 |

| D-621 Series—Plug | Threaded | Bayonet A | Bayonet B | Bayonet C | Bayonet D |
|---|---|---|---|---|---|
| 77-ohm pin contact | D-621-0413 | D-621-0453 | D-621-0454 | D-621-0455 | D-621-0456 |
| 77-ohm socket contact | D-621-0415 | D-621-0469 | D-621-0470 | D-621-0471 | D-621-0472 |
| 3000-ohm pin contact | D-621-0417 | D-621-0457 | D-621-0458 | D-621-0459 | D-621-0476 |
| 3000-ohm socket contact | D-621-0407 | D-621-0473 | D-621-0474 | D-621-0475 | D-621-0460 |
| **D-621 Series—Jack** | **Threaded** | **Bayonet A** | **Bayonet B** | **Bayonet C** | **Bayonet D** |
| 77-ohm pin contact | D-621-0418 | D-621-0477 | D-621-0478 | D-621-0479 | D-621-0480 |
| 77-ohm socket contact | D-621-0406 | D-621-0461 | D-621-0462 | D-621-0463 | D-621-0464 |
| 3000-ohm pin contact | D-621-0423 | D-621-0481 | D-621-0482 | D-621-0483 | D-621-0484 |
| 3000-ohm socket contact | D-621-0424 | D-621-0465 | D-621-0466 | D-621-0467 | D-621-0468 |
| **D-621 Series—L** | **Lanyard 7”** | **—** | **—** | **—** | **—** |

### Connector Caps

| D-621 Series | Threaded | Bayonet A | Bayonet B | Bayonet C | Bayonet D |
|---|---|---|---|---|---|
| Plug cap for jack connector Supplied with 7” Lanyard | D-600-0083 | D-600-0068 | D-600-0068 | D-600-0068 | D-600-0065 |

### Cable Splice Kits

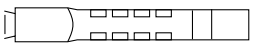

| Cables | Flexible Crimp |
|---|---|
| All data bus cables | D-150-0708-5 |



Catalog 1654025
Revised 3-13

www.te.com

Dimensions are shown for reference purposes only. Specifications subject to change.

Dimensions are in millimeters unless otherwise specified.

USA: +1 800 522 6752
Asia Pacific: +86 0 400 820 6015
UK: +44 800 267 666

For additional support numbers please visit www.te.com

## Accessories (Continued)

### Terminator and Connector and Compatibility — Bayonet and Threaded Connectors

| Panel Thickness | Connector | Contact | Terminator Reference | Mate with Standard Connector | Mate with Long Reach Connector |
|---|---|---|---|---|---|
| **Bayonet Connectors** | | | | | |
| **Polarity A** | | | | | |
| 77 Ohm bus terminator | Plug | Pin | D-621-0453(-L) | DK-621-0434-1S | DK-621-0550-1S |
| | Plug | Socket | D-621-0469(-L) | DK-621-0434-1P | DK-621-0550-1P |
| | Jack | Pin | D-621-0477(-L) | DK-621-0433-1S | — |
| | Jack | Socket | D-621-0461(-L) | DK-621-0433-1P | — |
| 3K Ohm stub terminator | Plug | Pin | D-621-0457(-L) | DK-621-0434-1S | DK-621-0550-1S |
| | Plug | Socket | D-621-0473(-L) | DK-621-0434-1P | DK-621-0550-1P |
| | Jack | Pin | D-621-0481(-L) | DK-621-0433-1S | — |
| | Jack | Socket | D-621-0465(-L) | DK-621-0433-1P | — |
| **Polarity B** | | | | | |
| 77 Ohm bus terminator | Plug | Pin | D-621-0454-(-L) | DK-621-0436-2S | DK-621-0548-2S |
| | Plug | Socket | D-621-0470-(-L) | DK-621-0436-2P | DK-621-0548-2P |
| | Jack | Pin | D-621-0478-(-L) | DK-621-0435-2S | — |
| | Jack | Socket | D-621-0462-(-L) | DK-621-0435-2P | — |
| 3K Ohm stub terminator | Plug | Pin | D-621-0458-(-L) | DK-621-0436-2S | DK-621-0548-2S |
| | Plug | Socket | D-621-0474-(-L) | DK-621-0436-2P | DK-621-0548-2P |
| | Jack | Pin | D-621-0482-(-L) | DK-621-0435-2S | — |
| | Jack | Socket | D-621-0466-(-L) | DK-621-0435-2P | — |
| **Polarity C** | | | | | |
| 77 Ohm bus terminator | Plug | Pin | D-621-0455(-L) | DK-621-0438-3S | DK-621-0546-3S |
| | Plug | Socket | D-621-0471(-L) | DK-621-0438-3P | DK-621-0546-3P |
| | Jack | Pin | D-621-0479(-L) | DK-621-0437-3S | — |
| | Jack | Socket | D-621-0463(-L) | DK-621-0437-3P | — |
| 3K Ohm stub terminator | Plug | Pin | D-621-0459(-L) | DK-621-0438-3S | DK-621-0546-3S |
| | Plug | Socket | D-621-0475(-L) | DK-621-0438-3P | DK-621-0546-3P |
| | Jack | Pin | D-621-0483(-L) | DK-621-0437-3S | — |
| | Jack | Socket | D-621-0467(-L) | DK-621-0437-3P | — |
| **Polarity D** | | | | | |
| 77 Ohm bus terminator | Plug | Pin | D-621-0456(-L) | DK-621-0440-4S | DK-621-0551-4S |
| | Plug | Socket | D-621-0472(-L) | DK-621-0440-4P | DK-621-0551-4P |
| | Jack | Pin | D-621-0480(-L) | DK-621-0439-4S | — |
| | Jack | Socket | D-621-0464(-L) | DK-621-0439-4P | — |
| 3K Ohm stub terminator | Plug | Pin | D-621-0460(-L) | DK-621-0440-4S | DK-621-0551-4S |
| | Plug | Socket | D-621-0476(-L) | DK-621-0440-4P | DK-621-0551-4P |
| | Jack | Pin | D-621-0468(-L) | DK-621-0439-4S | — |
| | Jack | Socket | D-621-0484(-L) | DK-621-0439-4P | — |
| **Threaded Connectors** | | | | | |
| 77 Ohm bus terminator | Plug | Pin | D-621-0413(-L) | DK-621-0412-S | DK-621-0512-S |
| | Plug | Socket | D-621-0415(-L) | DK-621-0412-P | DK-621-0512-P |
| | Jack | Pin | D-621-0418(-L) | DK-621-0411-S | — |
| | Jack | Socket | D-621-0406(-L) | DK-621-0411-P | — |
| 3K Ohm stub terminator | Plug | Pin | D-621-0417(-L) | DK-621-0412-S | DK-621-0512-S |
| | Plug | Socket | D-621-0407(-L) | DK-621-0412-P | DK-621-0512-P |
| | Jack | Pin | D-621-0423(-L) | DK-621-0411-S | — |
| | Jack | Socket | D-621-0424(-L) | DK-621-0411-P | — |







Dimensions are shown for reference purposes only. Specifications subject to change.

Dimensions are in millimeters unless otherwise specified.

USA: +1 800 522 6752
Asia Pacific: +86 0 400 820 6015
UK: +44 800 267 666

For additional support numbers please visit www.te.com

## Accessories (Continued)

### Triaxial Connectors and Terminator Compatibility — Bayonet and Threaded Connectors

| Panel Thickness | Connector | Contact | Connector Reference | Mate with | | |
|---|---|---|---|---|---|---|
| | | | | Connector | 77 Ohm Bus Terminator | 3K Ohm Stub Terminator |
| **Bayonet Connectors** | | | | | | |
| **Polarity A** | | | | | | |
| | Plug | Pin | DK-621-0433-1P | DK-621-0434-1S | D-621-0461(-L) | D-621-0465 (-L) |
| | Plug | Socket | DK-621-0433-1S | DK-621-0434-1P | D-621-0477(-L) | D-621-0481(-L) |
| Standard | Jack | Pin | DK-621-0434-1P | DK-621-0433-1S | D-621-0461(-L) | D-621-0473(-L) |
| 2.4mm max. | Jack | Socket | DK-621-0434-1S | DK-621-0433-1P | D-621-0453(-L) | D-621-0457(-L) |
| Long Reach | Jack | Pin | DK-621-0550-1P | DK-621-0433-1S | D-621-0469(-L) | D-621-0473(-L) |
| 12.5mm max. | Jack | Socket | DK-621-0550-1S | DK-621-0433-1P | D-621-0453(-L) | D-621-0457(-L) |
| **Polarity B** | | | | | | |
| | Plug | Pin | DK-621-0435-2P | DK-621-0436-2S | D-621-0462(-L) | D-621-0474 (-L) |
| | Plug | Socket | DK-621-0435-2S | DK-621-0436-2P | D-621-0478(-L) | D-621-0458(-L) |
| Standard | Jack | Pin | DK-621-0436-2P | DK-621-0435-2S | D-621-0470(-L) | D-621-0474(-L) |
| 2.4mm max. | Jack | Socket | DK-621-0436-2S | DK-621-0435-2P | D-621-0454(-L) | D-621-0458(-L) |
| Long Reach | Jack | Pin | DK-621-0448-2P | DK-621-0435-2S | D-621-0470(-L) | D-621-0467(-L) |
| 12.5mm max. | Jack | Socket | DK-621-0448-2S | DK-621-0435-2P | D-621-0454(-L) | D-621-0483(-L) |
| **Polarity C** | | | | | | |
| | Plug | Pin | DK-621-0437-3P | DK-621-0438-3S | D-621-0463(-L) | D-621-0467(-L) |
| | Plug | Socket | DK-621-0437-3S | DK-621-0438-3P | D-621-0479(-L) | D-621-0483(-L) |
| Standard | Jack | Pin | DK-621-0438-3P | DK-621-0437-3S | D-621-0471(-L) | D-621-0475(-L) |
| 2.4mm max. | Jack | Socket | DK-621-0438-3S | DK-621-0437-3P | D-621-0455(-L) | D-621-0459(-L) |
| Long Reach | Jack | Pin | DK-621-0446-3P | DK-621-0437-3S | D-621-0471(-L) | D-621-0475(-L) |
| 12.5mm max. | Jack | Socket | DK-621-0446-3S | DK-621-0437-3P | D-621-0455(-L) | D-621-0459(-L) |
| **Polarity D** | | | | | | |
| | Plug | Pin | DK-621-0439-4P | DK-621-0440-4S | D-621-0464(-L) | D-621-0468(-L) |
| | Plug | Socket | DK-621-0439-4S | DK-621-0440-4P | D-621-0480(-L) | D-621-0484(-L) |
| Standard | Jack | Pin | DK-621-0440-4P | DK-621-0439-4S | D-621-0472(-L) | D-621-0460(-L) |
| 2.4mm max. | Jack | Socket | DK-621-0440-4S | DK-621-0439-4P | D-621-0456(-L) | D-621-0476(-L) |
| Long Reach | Jack | Pin | DK-621-0551-4P | DK-621-0439-4S | D-621-0472(-L) | D-621-0476(-L) |
| 12.5mm max. | Jack | Socket | DK-621-0551-4S | DK-621-0439-4P | D-621-0456(-L) | D-621-0460(-L) |
| **Threaded Connectors** | | | | | | |
| | Plug | Pin | DK-621-0411-P | DK-621-0412-S | D-621-0406(-L) | D-621-0424(-L) |
| | Plug | Socket | DK-621-0411-S | DK-621-0412-P | D-621-0418(-L) | D-621-0423(-L) |
| Standard | Jack | Pin | DK-621-0412-P | DK-621-0411-S | D-621-0415(-L) | D-621-0407(-L) |
| 2.4mm max. | Jack | Socket | DK-621-0412-S | DK-621-0411-P | D-621-0413(-L) | D-621-0417(-L) |
| Long Reach | Jack | Pin | DK-621-0412-P | DK-621-0411-S | D-621-0415(-L) | D-621-0407(-L) |
| 12.5mm max. | Jack | Socket | DK-621-0412-S | DK-621-0411-P | D-621-0413(-L) | D-621-0417(-L) |



Dimensions are shown for reference purposes only. Specifications subject to change.

Dimensions are in millimeters unless otherwise specified.

USA: +1 800 522 6752
Asia Pacific: +86 0 400 820 6015
UK: +44 800 267 666

For additional support numbers please visit www.te.com

## Accessories (Continued)

### Triaxial Connectors and Terminator Compatibility — to European norme 3716

| Panel Thickness | Connector | Contact | Connector Reference | Mate with | | |
|---|---|---|---|---|---|---|
| | | | | Connector | 77 Ohm Bus Terminator | 3K Ohm Stub Terminator |
| **Triaxial Connectors** | | | | | | |
| | Plug | Pin | DK-3716-F101-TP | DK-621-E102-TS | D-621-E077-S | D-621-E03K-S |
| | Plug | Socket | DK-3716-F101-TS | DK-621-E102-TP | D-621-E077-P | D-621-E03K-P |
| | Plug | Pin | DK-3716-F201-TP | DK-621-E202-TS | D-621-E077-S | D-621-E03K-S |
| | Plug | Socket | DK-3716-F201-TS | DK-621-E202-TP | D-621-E077-P | D-621-E03K-P |
| Standard 2.4mm max. | Jack | Pin | DK-3716-E102-TP | DK-621-F101-TS | D-621-F077-S | D-621-F03K-S |
| | Jack | Socket | DK-3716-E102-TS | DK-621-F101-TP | D-621-F077-P | D-621-F03K-P |
| | Jack | Pin | DK-3716-E202-TP | DK-621-F201-TS | D-621-F077-S | D-621-F03K-S |
| | Jack | Socket | DK-3716-E202-TS | DK-621-F201-TP | D-621-F077-P | D-621-F03K-P |
| Long Reach 12.5mm max. | Jack | Pin | DK-3716-E112-TP | DK-621-F101-TS | D-621-F077-S | D-621-F03K-S |
| | Jack | Socket | DK-3716-E112-TS | DK-621-F101-TP | D-621-F077-P | D-621-F03K-P |
| | Jack | Pin | DK-3716-E212-TP | DK-621-F201-TS | D-621-F077-S | D-621-F03K-S |
| | Jack | Socket | DK-3716-E212-TS | DK-621-F201-TP | D-621-F077-P | D-621-F03K-P |

| Panel Thickness | Connector | Contact | Terminator Reference | Mate with | |
|---|---|---|---|---|---|
| | | | | Standard Connector | Long Reach Connector |
| **Terminators** | | | | | |
| 77 Ohm bus terminator | Plug | Pin | DK-3716-F077-P | DK-3716-E#02-TS | DK-3716-E#12K-TS |
| | Plug | Socket | DK-3716-F077-S | DK-3716-E#02-TP | DK-3716-E#12K-TP |
| | Jack | Pin | DK-3716-F077-P | DK-3716-E#01-TS | — |
| | Jack | Socket | DK-3716-F077-S | DK-3716-E#01-TP | — |
| 3K Ohm stub terminator | Plug | Pin | DK-3716-E03K-P | DK-3716-E#02-TS | DK-3716-E#12K-TS |
| | Plug | Socket | DK-3716-E03K-S | DK-3716-E#02-TP | DK-3716-E#12K-TP |
| | Jack | Pin | DK-3716-E03K-P | DK-3716-E#01-TS | — |
| | Jack | Socket | DK-3716-E03K-S | DK-3716-E#01-TP | — |





Catalog 1654025
Revised 3-13

www.te.com

Dimensions are shown for reference purposes only. Specifications subject to change.

Dimensions are in millimeters unless otherwise specified.

USA: +1 800 522 6752
Asia Pacific: +86 0 400 820 6015
UK: +44 800 267 666

For additional support numbers please visit www.te.com

## Triaxial Size 8 Contacts

### Product Facts

- One-step termination
- Termination time of 1 to 2 minutes
- No requirements for special termination tools
- No requirements for special skills
- Reworkable and repairable terminations
- Strain relief
- Continuous 360° shield coverage
- Triaxial mating face for least susceptibility to damage
- Rugged construction, because only two parts are being soldered together
- Inspectable solder terminations
- Low voltage drop and high reliability due to precisely controlled solder termination

### Applications

Contacts provide full shield coverage with a simple, quick, and reliable termination system. 24 AWG twisted-pair data bus cables are terminated with triaxial SolderTacts contacts, which fit size 8 cavities of MIL-C-38999, Series 1, 3, or 4 connectors.

Triaxial size 8 data bus contacts for MIL-C-38999 connectors have interfaces that comply with MIL-C-39029/90 and /91 to provide ease of termination, and intermateability with more cumbersome crimp contacts.

These contacts provide a fast and convenient method of implementing MIL-STD-1553B connections in MIL-STD-1760 applications.

### Specifications/Approvals

| Series | TE |
|---|---|
| Size 8 | D-6002 |

### Product Selection

| Cable Type | Pin | Socket |
|---|---|---|
| 10612 | DK-602-0156-N-1 | DK-602-0157-N-1 |
| 10613 | DK-602-0156-N-2 | DK-602-0157-N-2 |
| 10614 | DK-602-0156-N-3 | DK-602-0157-N-3 |

| Available in: | |
|---|---|
| Americas | ■ |
| Europe | ■ |
| Asia Pacific | ■ |



Catalog 1654025
Revised 3-13

www.te.com

Dimensions are shown for reference purposes only. Specifications subject to change.

Dimensions are in millimeters unless otherwise specified.

USA: +1 800 522 6752
Asia Pacific: +86 0 400 820 6015
UK: +44 800 267 666

For additional support numbers please visit www.te.com

## Space Grade MIL-STD-1553B Data Bus Components

### Product Facts

- **High packaging density and weight savings**
- **Design flexibility**
- **Complete line of space qualified MIL-STD-1553B components**
- **Low outgassing levels that meet NASA requirements**
- **Rugged construction**
- **Factory built harnesses eliminate unnecessary splices and connectors, reducing the cost and increasing the reliability of the networks**
- **Factory built harnesses are pre-tested to customer requirements and are ready for installation**

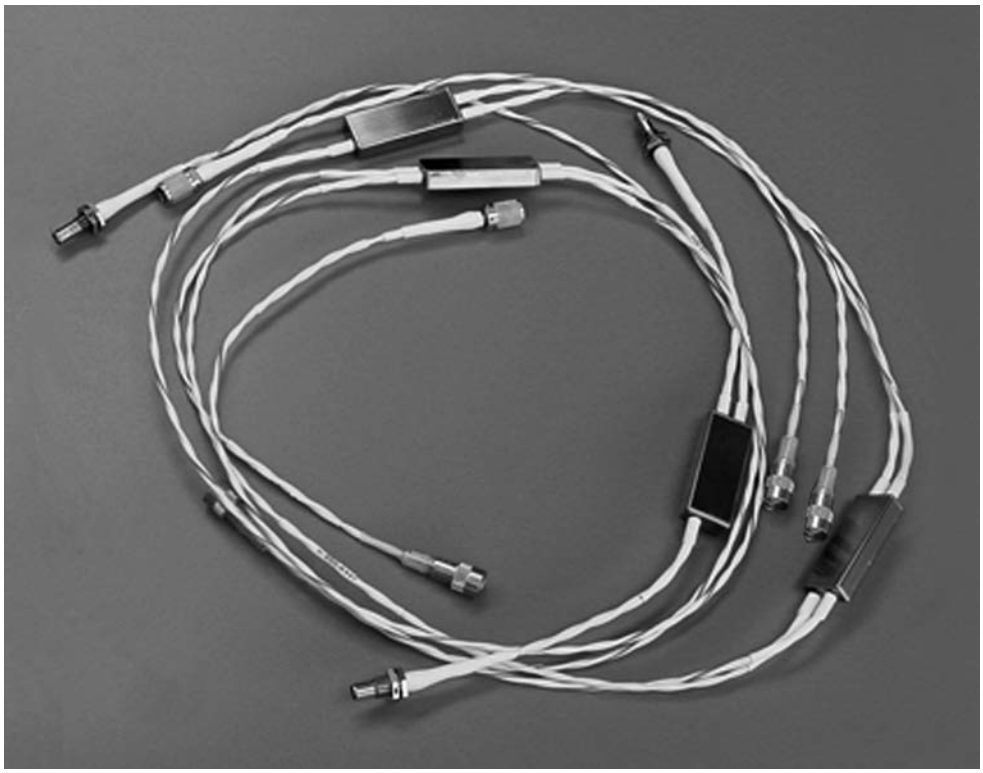

A complete system of interconnection hardware for MIL-STD-1553B networks

Complete collection of components include:

- A wide selection of in line couplers
- Data bus cables
- Triax connectors and contacts with strain relief
- One-piece triaxial contacts for MIL-C-38999 connectors
- Bus and stub terminators
- Low outgassing components for use in space
- Cable identification sleeves
- Harness design software using HarnWare software
- Flexible cable splices

### Applications

Used in MIL-STD-1553B multiplexing space applications

Flight control for:

- Launch Vehicles
- Satellites
- Human Spacecraft
- Cargo Spacecraft
- Deep Space Probes

### Specifications

Meets TE Specification D-6022 for space-grade data bus components.

**Note:** TE is a major supplier of space data bus products to a number of space equipment OEM's.



| Available in: | |
|---|---|
| Americas | ■ |
| Europe | ■ |
| Asia Pacific | ■ |



Catalog 1654025
Revised 3-13

www.te.com

Dimensions are shown for reference purposes only. Specifications subject to change.

Dimensions are in millimeters unless otherwise specified.

USA: +1 800 522 6752
Asia Pacific: +86 0 400 820 6015
UK: +44 800 267 666

For additional support numbers please visit www.te.com

## Space Grade MIL-STD-1553B Data Bus Components (Continued)

### Components

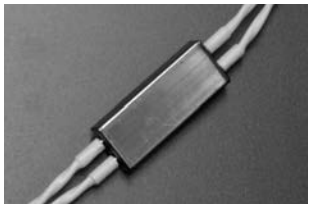

#### In-Line Couplers and Terminators

- Tin/Nickel-plated metallic parts
- Baked silicone rubber components
- Low out-gassing tubing
- D-500-94XX-X-XXX series for couplers
- D-500-9463-XXX series for terminators

#### Threaded Triaxial Connectors

- Tin/Nickel-plated metallic parts
- Baked silicone rubber components
- Low out-gassing tubing
- DK-621-0911P
- DK-621-0911S
- DK-621-0912P
- DK-621-0912S

#### Bayonet Triaxial Connectors

- Tin/Nickel-plated metallic parts
- Baked silicone rubber components
- Low out-gassing tubing

**"A" Polarization**

- DK-621-0933-1P or S
- DK-621-0934-1P or S

**"B" Polarization**

- DK-621-0935-2P or S
- DK-621-0936-2P or S

**"C" Polarization**

- DK-621-0937-3P or S
- DK-621-0938-3P or S

**"D" Polarization**

- DK-621-0939-4P or S
- DK-621-0940-4P or S

#### Splice Kits

- Flux-coated, solder impregnated copper shield braid encased in a transparent heat-shrinkable insulation sleeve provides a controlled soldering process, encapsulation, inspectability, strain relief and insulation
- D-150-9708-5

#### Standard Space Cables

- Optimized single shield
  S16 = 7724S1664-9
  S1L = 7724S1LL4 LF*

*LF = Low Fluoride

**EMP Hardened**

- S86 = 7724S8664-9
- S8L = 7724S8LL4-9 LF

**Optimized Double Shield**

- S36 = 7724S3664-9
- S3L = 7724S3LL4 LF

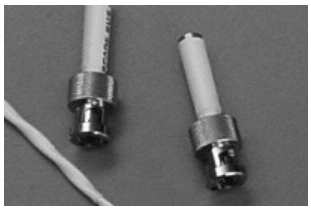

#### Demateable Terminators

- Available with and without lanyard
- DK-621-0937
- DK-621-0938
- DK-621-0939
- DK-621-0940
- DK-621-0933
- DK-621-0934
- DK-621-0935
- DK-621-0936

**TE also manufactures complete harnesses to customer specifications and print.**



Dimensions are shown for reference purposes only. Specifications subject to change.

Dimensions are in millimeters unless otherwise specified.

USA: +1 800 522 6752
Asia Pacific: +86 0 400 820 6015
UK: +44 800 267 666

For additional support numbers please visit www.te.com

## Space Grade MIL-STD-1553B Data Bus Components (Continued)

### Space-Grade In-Line Coupler Part Numbering System

**D-500-94 W W -X -YYY -ZZZ**

**Cable Length**
012 = 12 in
078 = 78 in
079 = 79 in
120 = 120 in
236 = 236 in
240 = 240 in

**Cable Type**
41L = 7724S1LL4 (24 AWG single optimized shield)
43L = 7724S3LL4 (24 AWG double optimized shield)
48L = 7724S8LL4 (24 AWG EMP hardened)

**Number of Stubs**
1, 2, 3, or 4

**Design**
5 = Without internal terminator
6 = Same as 5 but with reverse bus
7 = With internal terminator
8 = Same as 7 but with reverse bus

**Style**
5 = Without mounting eyelet
6 = With mounting eyelet





Catalog 1654025
Revised 3-13

www.te.com

Dimensions are shown for reference purposes only. Specifications subject to change.

Dimensions are in millimeters unless otherwise specified.

USA: +1 800 522 6752
Asia Pacific: +86 0 400 820 6015
UK: +44 800 267 666

For additional support numbers please visit www.te.com

## Space Grade MIL-STD-1553B Data Bus Components (Continued)

### Space-Grade Connectors Part Numbering System

**DK-621 -09 XX -X X**

**Contact (installed, DK-621 kits only)**
P = Pin*
S = Socket*
*May be ordered separately as D-602-0126 (pin) and D-602-0127 (socket)

**Polarization (bayonet styles only) (jack view)**

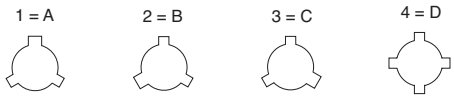


**Basic Connector Configurations**
Threaded styles:
11 = Plug
12 = Jack

Bayonet styles:
33 = Plug, A polarization
34 = Jack, A polarization
35 = Plug, B polarization
36 = Jack, B polarization
37 = Plug, C polarization
38 = Jack, C polarization
39 = Plug, D polarization
40 = Jack, D polarization

**D-621 Connector, Kitted with Accessories**

### Space-Grade Terminators Part Numbering System

**D-500-9463- ZZZ**

**Cable Type**
41L = 7724S1LL4 (24 AWG single optimized shield)
43L = 7724S3LL4 (24 AWG double optimized shield)
48L = 7724S8LL4 (24 AWG EMP hardened)

**Space-Grade Splice Kit = D-150-9708-5**



Catalog 1654025
Revised 3-13

www.te.com

Dimensions are shown for reference purposes only. Specifications subject to change.

Dimensions are in millimeters unless otherwise specified.

USA: +1 800 522 6752
Asia Pacific: +86 0 400 820 6015
UK: +44 800 267 666

For additional support numbers please visit www.te.com

## Customer-Specified Harness Assemblies and Harn*Ware* Harness Design Software

TE supplies complete Raychem brand data bus networks in accordance with customer harness drawings, with any customer-specified cables and/or connectors. Using factory-built harnesses eliminates unnecessary splices and connectors, reducing the cost and increasing the reliability of the networks. Factory-built harnesses are pre-tested and ready for installation.

Harn*Ware* Harness Design Software allows designers to draw a data bus harness in a matter of minutes, while selecting TE or others' components; a bill of materials is automatically generated.

## Sample Drawing

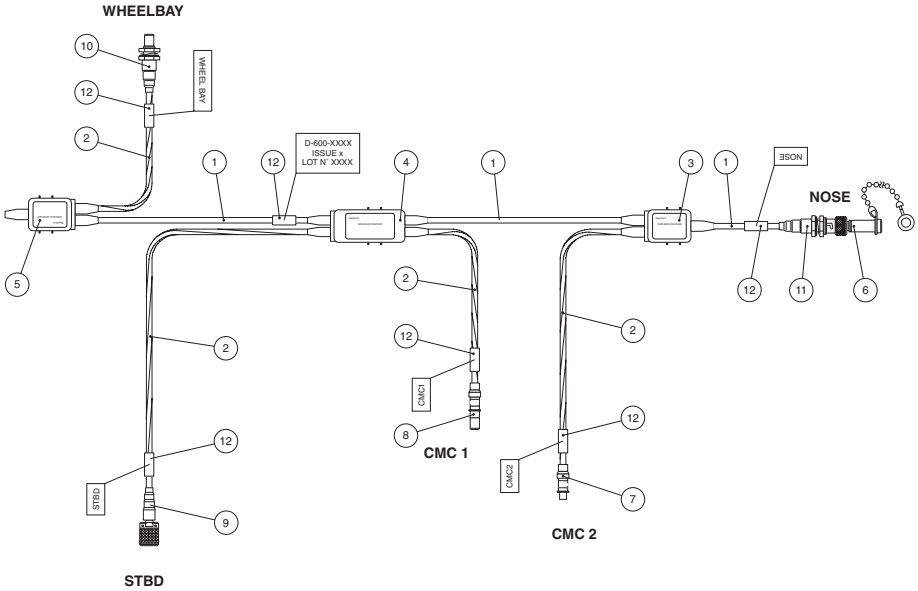


**Parts List**

| Item | Description | Part No. | Spec/Remarks | Qty | Unit |
|---|---|---|---|---|---|
| 1 | Data bus Cable | 10613-9 | TE | 5.3 | M |
| 2 | Data bus Cable | 10613-96 | TE | 7 | M |
| 3 | Data bus Coupler | D-500-0455-1 | TE | 1 | Pc |
| 4 | Data bus Coupler | D-500-0455-2 | TE | 1 | Pc |
| 5 | Data bus Coupler | D-500-0457-1 | TE | 1 | Pc |
| 6 | Data bus Terminator | D-621-0469-L | TE | 1 | Pc |
| 7 | Data bus Contact | DK-602-0156-N-2 | TE | 1 | Pc |
| 8 | Data bus Contact | DK-602-0157-N-2 | TE | 1 | Pc |
| 9 | Data bus Connector | DK-621-0411-P | TE | 1 | Pc |
| 10 | Data bus Connector | DK-621-0412-P | TE | 1 | Pc |
| 11 | Data bus Connector | DK-621-0434-1P | TE | 1 | Pc |
| 12 | Marker Sleeve | TMS-SCE-3/16-2.0-9 | TE | 6 | Pc |







Dimensions are shown for reference purposes only. Specifications subject to change.

Dimensions are in millimeters unless otherwise specified.

USA: +1 800 522 6752
Asia Pacific: +86 0 400 820 6015
UK: +44 800 267 666

For additional support numbers please visit www.te.com

## Engineering Notes



Catalog 1654025
Revised 3-13

www.te.com

Dimensions are shown for reference purposes only. Specifications subject to change.

Dimensions are in millimeters unless otherwise specified.

USA: +1 800 522 6752
Asia Pacific: +86 0 400 820 6015
UK: +44 800 267 666

For additional support numbers please visit www.te.com

## Table of Contents

**Introduction** . . . . . 9-2

**High-Performance Wire and Cable**
- SPEC 44 Wire and Cable . . . . . 9-3 to 9-9
- SPEC 55 Wire and Cable . . . . . 9-10 to 9-20
- FlexLine (SPEC 80) Wire and Cable . . . . . 9-21, 9-22

**Low-Fire-Hazard Wire and Cable**
- Type 99 Wire and Cable . . . . . 9-23 to 9-26
- Zerohal 100A Wire and Cable . . . . . 9-27 to 9-29
- Zerohal 100G Wire and Cable . . . . . 9-30 to 9-32

**Signal and Control Cables for Offshore and Commercial Shipping**
- C-Lite Low Fire Hazard Lightweight Cables . . . . . 9-33 to 9-49
- C-Lite F (Fire Resistant) Cable . . . . . 9-50, 9-51

**Commercial Wire Family**
- FlexLite Wire . . . . . 9-52, 9-53
- FlexLite CW Wire . . . . . 9-54, 9-55
- FlexLite DW Wire . . . . . 9-56, 9-57
- FlexLite TW Wire . . . . . 9-58, 9-59
- FlexLite HT Wire . . . . . 9-60, 9-61

**Thermocouple Extension Cable**
- Thermocouple Extension Cable . . . . . 9-62 to 9-64

**Controlled Electrical Cables**
- Electroloss FilterLine Cables . . . . . 9-67 to 9-72
- Cheminax Coaxial Cables . . . . . 9-73 to 9-75
- Cheminax High-Performance Cables . . . . . 9-76
- Cheminax Twin Axial Cables . . . . . 9-77, 9-78
- SeaLAN Ethernet Cables . . . . . 9-79, 9-80
- SHF-260 Highly Flexible Wire . . . . . 9-81
- ZEROHAL PROFIBUS Cables . . . . . 9-82, 9-83
- QUADLITE Quadaxial Cables . . . . . 9-84 to 9-88
- High Speed Copper Cable Assemblies . . . . . 9-89
- High Speed Copper Cables . . . . . 9-90 to 9-93

**Multiconductor (Multicore) Cables**
- Custom Designed and Standard Multiconductor Cables . . . . . 9-94
- Multicore Cables . . . . . 9-95, 9-96
- Computer Aided Design . . . . . 9-97
- Custom Shipboard Cables . . . . . 9-98

**Braids**
- RayBraid Tubular Braiding . . . . . 9-99, 9-100

**Cable Jacket Materials**
- Properties and Specifications . . . . . 9-101, 9-102
- FDR 25 . . . . . 9-103, 9-104
- Zerohal . . . . . 9-105 to 9-107
- Thermorad HTF/Fluoroelastomer . . . . . 9-108
- Thermorad/Thermorad F . . . . . 9-109
- Raythane, NT/Thermorad NTFR, Rayolin, and AFR . . . . . 9-110
- NBC . . . . . 9-111, 9-112

**Miscellaneous**
- Electrical Shielding . . . . . 9-113, 9-114
- Power Cables . . . . . 9-115 to 9-118

**Note:** Users should independently evaluate the suitability of the product for their application. Before ordering, check with TE Connectivity for most current data.





Catalog 1654025
Revised 3-13

www.te.com

Dimensions are shown for reference purposes only. Specifications subject to change.

Dimensions are in millimeters unless otherwise specified.

USA: +1 800 522 6752
Asia Pacific: +86 0 400 820 6015
UK: +44 800 267 666

For additional support numbers please visit www.te.com

## Introduction

TE provides wire and cable solutions for challenging environments and demanding applications. The product range includes high-performance insulated wires, coaxial and data bus cables, power cables, electronics wire, and multicore cables.

- **SPEC 44** wire is an economical yet rugged dual-wall insulation system rated at 150°C [221°F], with consistently low cost and reliable performance.
- **SPEC 55** wire insulation provides high reliability in harsh environments from -65°C to +200°C [-85°F to +392°F]. Resistant to electrical arc tracking, it combines the easy handling of a flexible wire with excellent resistance to scrape abrasion, and cut-through.
- **SPEC 80** (FlexLine) wire is insulated with a flexible modified radiation cross-linked ETFE polymer with a temperature rating of -65˚C to +200˚C [-85˚F to -395˚F]
- **Type 99** wire has a dual wall construction and has excellent mechanical performance and chemical resistance with a range of enhanced fire hazard properties.
- **ElectroLoss Filterline** wire reduces the vulnerability of critical circuits to high-frequency electromagnetic interference.
- **Cheminax** coaxial and data bus cables allow system designers to optimize minimum size and weight with impedance and attenuation characteristics.
- **Multiconductor (multicore)** cables organize a variety of TE wire and cable products in controlled geometries for specific applications. Using a computer-aided design system, TE can quickly design multicore cables to meet your needs. A variety of cable jackets are available to suit most applications.
- **High Speed Copper cable** designs are available for Cat 5e, Cat 6, IEEE 1394 and USB applications. This family of cables can be customized to meet specific application needs.
- **SeaLAN Cat 5e and Zerohal PROFIBUS** cables are designed to be used in the demanding marine environmental conditions while still meeting the high performance data standards.
- **Quadlite** quadraxial cables, rated up to 200˚C, offer small size and light weight high speed solutions in aerospace applications which require data protocols such as 100BaseT, 1000BaseT, FiberChannel and IEEE 1394.
- **C-Lite low fire hazard lightweight cables** offer significant size and weight reduction, when compared to conventional insulation systems, while at the same time meeting key criteria such as low fire hazard performance and mechanical robustness.
- **FlexLite commercial wire** family is available in various constructions for a variety of applications with temperature ratings from -45˚C up to 250˚C.
  **FLCW** is a general purpose and motor lead wire.
  **FLDW** is a dual-wall primary wire.
  **FLTW** is a thin-wall hookup wire and cable.
  **FLHT** is a high-temperature hookup wire.
  **FLTX** is an ultra-high temperature hookup wire.

TE wire and cable products can meet your specific application needs. Here are just a few examples:

- Limited-fire-hazard wire and cable for mass transit and marine applications.
- High-performance, high temperature automotive wiring.
- Small, light hookup wires for high-temperature applications in commercial appliances, tools, and devices.
- Very flexible, rugged, thin-wall insulated power cables.
- Low-outgassing space-vehicle wiring.
- Lightweight, shielded wire and cable constructions for aerospace applications.
- Thermocouple extension cables with a range of our high-performance insulation materials.

Contact TE to find out more about wire and cable and our associated interconnection products.



Dimensions are shown for reference purposes only. Specifications subject to change.

Dimensions are in millimeters unless otherwise specified.

USA: +1 800 522 6752
Asia Pacific: +86 0 400 820 6015
UK: +44 800 267 666

For additional support numbers please visit www.te.com

## SPEC 44

### Product Facts

- **Dual wall construction**
- **600, 1000 and 2500 voltage rating**
- **Small size, light weight**
- **Resistant to most chemicals and electrical arc tracking**

### Applications

SPEC 44 wire has a dual wall construction which combines the outstanding physical and electrical characteristics of radiation crosslinked polyalkene with the excellent mechanical and chemical properties of radiation cross-linked polyvinylidene fluoride (PVDF).

The result is a wire insulation system that offers a 150°C [302°F] temperature rating, small size, light weight, solder iron resistance, and resistance to most solvents, fuels and lubricants.

SPEC 44 wire and cable is highly flame retardant, non-melting, does not cold flow, and though mechanically very tough, is easy to handle and install using conventional tools.

Originally developed for aerospace and military requirements in applications of high density and complex circuitry, SPEC 44 wire and cable now finds wide use throughout industry, in commercial and military electronics, avionics, on satellites, aircraft, helicopters, ships, trains, military ground systems, and offshore platforms where environmental conditions demand consistently reliable performance. In airframe applications SPEC 44 constructions can offer a modern dimensional replacement for PVC/Nylon/Glass braid type wire and cables. SPEC 44 wire is offered in a wide range of sizes in stranded conductors, standard materials available being tin or silver-plated copper and high strength copper alloy. Voltage ratings of 600, 1000 and 2500 volts are available as standard. Shielded and jacketed versions include single and multi-conductor constructions and flat braid shields where further size and weight savings are achieved.

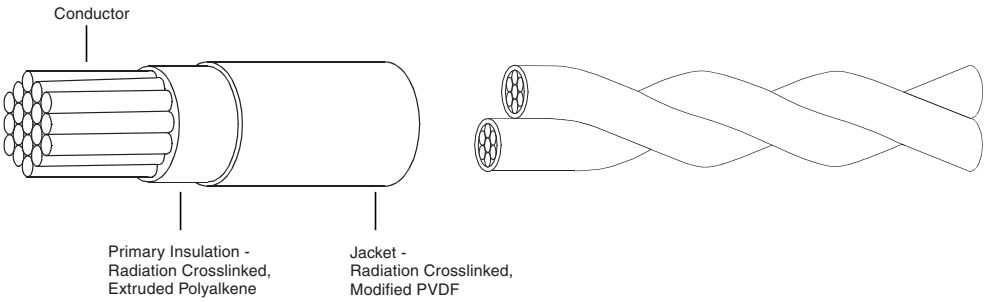


| Available in: | Americas | Europe | Asia Pacific |
|---|---|---|---|
| | ■ | ■ | ■ |





Catalog 1654025
Revised 3-13

www.te.com

Dimensions are shown for reference purposes only. Specifications subject to change.

Dimensions are in millimeters unless otherwise specified.

USA: +1 800 522 6752
Asia Pacific: +86 0 400 820 6015
UK: +44 800 267 666

For additional support numbers please visit www.te.com

## SPEC 44 (Continued)

### Physical Characteristics

#### Small Size

SPEC 44 equipment wire, 600 volt rated has a 0.19 [.008] nominal wall thickness compared to 0.25 [.010] and 0.38 [.015] for equivalent PTFE and PVC wires in MIL-DTL-16878, SAE AS22759 or BS 3G210.

#### Light Weight

Because of the thin wall and low density of the insulation materials considerable weight savings are made over similarly rated PTFE wires, eg:- 44A0111-22AWG equipment wire 4.45 grams/meter max
22 AWG PTFE equipment wire, AS-81044
5.54 grams/meter max

#### General Handling

The flexibility of SPEC 44 and the ease with which it takes a 'set' makes it one of the easiest of the 'high performance' wires to install. Stripping is done with conventional die blade strippers.

The tin-plated conductor usually specified is easily soldered or crimped. The insulation may be easily printed and does not need etching before potting.

#### Lengths

SPEC 44 is available in long continuous lengths and can be supplied for use on automatic cut and strip wire preparation machines.

### Specifications/Approvals

| |
|---|
| AS-81044, NEMA-WC-27500 (Cables) |
| Def Stan. 61-12 Part 18 - Type 1 pliable (Maintenance Range) |
| Def Stan. 61-12 Part 26 All types |
| VG 95218 Parts 20, 21, 22, 23 and 1000 |
| NATO Stock Numbers (NSN's) exist for most standard constructions |
| Civil Aviation Authority Accessory Approval E11623 |
| TE Specification 44 |

**NOTE:**
Please check with TE personnel to ensure the product you wish to purchase is manufatured and released to the specification required.

### Typical Properties

| | |
|---|---|
| Temperature rating | -65°C to +150°C [-85°F to +302°F] |
| Voltage rating (thin wall) | 600 V |
| Voltage rating (thick wall) | 2500 V |
| Tensile strength and elongation of insulation | 28 N/mm2, (4000 PSI), 230% |
| Notch propagation, 0.05mm notch | Pass |
| Solder iron resistance (370°C, 1 minute) | Pass |
| Shrinkage, 300°C | <1% |
| Low temperature bend | -65°C [-85°F] |
| Voltage withstand (thin wall) | 2500 V |
| Resistance: fuels, oils, solvents | Pass |



Dimensions are shown for reference purposes only. Specifications subject to change.

Dimensions are in millimeters unless otherwise specified.

USA: +1 800 522 6752
Asia Pacific: +86 0 400 820 6015
UK: +44 800 267 666

For additional support numbers please visit www.te.com

**SPEC 44** (Continued)

## Environmental Performance

### Temperature Rating

SPEC 44 wire and cable is rated for continuous operation from -65°C to +150°C [-85°F to +302°F] and for short periods at temperatures as high as 300°C [572°F]. Heat ageing tests are routinely performed at temperatures of 200°C [392°F] (168 hr) and 300°C [572°F] (6 hr). In addition SPEC 44 insulation will not shrink back under repeated cycling.

### Mechanical Performance

SPEC 44 wire provides better cut through resistance than some wires with much thicker walls. 600 volt equipment wire 44A0111 (0.19 mm wall) has 40% greater cut through resistance than 600 volt PTFE insulated wire (0.25 mm wall).

### Solder Iron/Overload Resistance

The radiation crosslinking of the materials used in SPEC 44 makes them non-melting at high temperature. As a result SPEC 44 wire is resistant to prolonged contact with solder irons and is resistant to current overloads which would melt most thermoplastic insulation.

### Chemical Resistance

The irradiated dual wall construction of SPEC 44 wire is highly resistant to many acids, alkalis, hydrocarbon solvents, fuels, lubricants, water, and many missile fuels and oxidizers.

### Cold Flow

Radiation cross-linking of SPEC 44 prevents cold flow of the insulation — a recognized problem of some uncrosslinked materials.

### Voltage Ratings

Standard available voltage ratings for SPEC 44 wire are 600 volts (0.19 mm wall thickness), 1000 volts (0.28 mm wall) and 2500 volts (0.48 mm wall).

### Electrical Arc Track Resistance

SPEC 44 insulation demonstrates a resistance to arc tracking under both wet and dry conditions at aircraft system voltages.

### Low Outgassing

For use in space applications, special constructions of SPEC 44 wire are available with low outgassing characteristics, for use in an environment of high vacuum and high temperature.

## Fire Hazard Performance

| | | |
|---|---|---|
| Flammability | Federal Aviation Reg FAR-25 | Pass |
| | BS EN 50265 Vertical Flammability | Pass |
| | S424 14751 (Swedish chimney) | Pass |
| | NFC 32070 (2) (French chimney) | Pass |
| | IEC 60332 part 3 (Cable ladder) | Pass |
| Smoke/Toxicity Index | Smoke Index, Def Stan 61-12 (18) | 6 per meter of wire |
| | Toxicity Index, Def Stan 61-12 (18) | 0.8 per meter of wire |
| | BS EN 1S0-4589 Part 2<br>BS EN 1S0-4589 Part 3 | 30% Oxygen |
| | Temperature Index, NES 715 | >300°C [572°F] |

## SPEC 44 (Continued)

### Part Numbering System

Cross items that are not standard.

**44 X X X X X- AWG- X/X- X**

**Jacket Color**
(codes same as for Primary Wire Insulation Color)

**Primary Wire Insulation Color**
(code per MIL-STD-681)

| | | | |
|---|---|---|---|
| 0 - | Black | 5 - | Green |
| 1 - | Brown | 6 - | Blue |
| 2 - | Red | 7 - | Violet |
| 3 - | Orange | 8 - | Gray |
| 4 - | Yellow | 9 - | White |

**Conductor Size (AWG)**

**Conductor Type**

| | |
|---|---|
| 1 - Tin-coated copper | A - Silver-coated CS95 |
| 2 - Silver-coated copper | C - Silver-coated high strength copper alloy (cadmium-free) |
| 3 - Nickel-coated copper | D - Nickel-coated high strength copper alloy (cadmium-free) |
| 4 - Silver-coated high strength copper alloy | |
| 5 - Aluminum | |
| 6 - Nickel-coated high strength copper alloy | |

**Number of Conductors**
1 through 10 (designator for 10 conductor = 0)

**Class of Wire**

| | |
|---|---|
| 1 - 600 volt, general purpose | 6 - 2500 volt, outerspace* |
| 2 - 1000 volt, general purpose | 7 - 600 volt, airframe |
| 3 - 2500 volt, general purpose | 8 - 600 volt, medium weight |
| 4 - 600 volt, outerspace* | |
| 5 - 1000 volt, outerspace* | |

**Construction**

0 - Primary wire; or unshielded & unjacketed cable
1 - Round braid shielded and jacketed cable**
2 - Tin-coated copper flat braid shielded & jacketed cable
3 - Round braid shielded cable, no jacket**
4 - Jacketed cable, no shield
5 - Spiral braid shielded & jacketed cable**
7-9 - Special constructions

**Temperature Rating:**

/ - 135˚C (XL-PVF2 cable jacket) - USA only
A - 150˚C (XL-PVF2 cable jacket)
AC - 150˚C (same as 44AM with 90% min. shield coverage)
AM - 150˚C (M27500, shielded and/or XL-PVF2 jacketed cable)
B - 150˚C (XL-ETFE cable jacket)
D - 135˚C (XL-PVF2) - Def Stan Part 26-UK only)

**Part Numbering System is a cross reference only and not meant for part creation.**

**Basic Product Number**

* Classes 4, 5 and 6 available only as "44/" constructions. 44/7xxx and 44A7xxx will be available as indicated on the applicable SCD.
**Shield coating same as conductor coating except: - for Conductor Type 4, 6, C and D, shield shall be tin-coated copper for standard products

| | |
|---|---|
| Typical ordering example | 3 conductors, brown, yellow with green stripe, blue, white jacket. If 600 volt, round braid, 20 AWG tinned conductor, 44A1131-20-1/45/6-9. |
| Ordering information | Other constructions and custom designed wire and cable are available on request. |



Dimensions are shown for reference purposes only. Specifications subject to change.

Dimensions are in millimeters unless otherwise specified.

USA: +1 800 522 6752
Asia Pacific: +86 0 400 820 6015
UK: +44 800 267 666

For additional support numbers please visit www.te.com

**SPEC 44** (Continued)

## NEMA WC-27500 Cable Part Numbering System

**M27500 X AWG XX X X XX**

**Basic Specification Number**

**Component Wire ID/Shield Coverage Code**

| Shield Coverage 85% | Shield Coverage 90% | Component Wire Identification |
|---|---|---|
| - | C | Colored Stripes on White Wire (9/96/93/95/92/90/94/97/98/91... etc.) |
| A | D | Solid Color Wires (9/6/3/5/2/0/4/7/8/1...etc.) |
| B | E | Band Marks on Solid Colors (by AWG) |
| F | H | Alternate Colored Stripes (92/96/94/95/9/90/91/93/97/98...etc) |
| G | J | Alternate Solid Colors (2/6/4/5/9/0/1/3/7/8...etc.) |
| K | M | Number Marking on Solid Colors (by AWG) |
| L | N | Number Marking on White Wires |
| P | R | Band Marks on Colored Stripes (by AWG) |
| S | T | Band Marks on White Wires |
| U | V | Non-standard color - defined by customer |

**Conductor Size (AWG)**

**Basic Wire Spec Code (MIL-W-81044) and Slash Sheet**

MD - M81044/5 (44A0712)
ME - M81044/6 (44A0711)
MF - M81044/7 (44A0714)
MG - M81044/8 (44A0812)
MH - M81044/9 (44A0811)
MJ - M81044/10 (44A0814)
MK - M81044/11 (44A0112)
ML - M81044/12 (44A0111)
MM - M81044/13 (44A0114)

**Number of Component Wires**

**Shield Material and Style Code**

U - No shield
T - Tin-coated copper, round
J - Tin-coated copper, flat
S - Silver-coated copper, round
G - Silver-coated copper, flat
N - Nickel-coated copper, round

**Jacket Material and Style Code**

00 - No jacket
08 - Crosslinked, white PVDF
23 - Crosslinked, white Modified ETFE

**Example:** **M27500-22ML3T08 = 44AM1131-22-9/96/93-9**

Tyco Electronics Part No.

Military Part No.

**Part Numbering System is a cross reference only and not meant for part creation.**







Dimensions are shown for reference purposes only. Specifications subject to change.

Dimensions are in millimeters unless otherwise specified.

USA: +1 800 522 6752
Asia Pacific: +86 0 400 820 6015
UK: +44 800 267 666

For additional support numbers please visit www.te.com

## SPEC 44 (Continued)

### Primary Wires/Twisted Pair

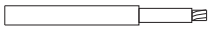

**44A011X (600 V)**
**Primary Wire**

**44A021X (1000 V)**
**Primary Wire**

| Wire Size (AWG) | Stranding (mm) | Stranding #/AWG | CSA (mm²) | 44A011X (600 V) Nom. OD | 44A011X (600 V) Max. Weight (g/m) lb/kft | 44A021X (1000 V) Nom. OD | 44A021X (1000 V) Max. Weight (g/m) lb/kft |
|---|---|---|---|---|---|---|---|
| 30 | 7/0.10 | 7/38 | 0.06 | 0.68 [0.027] | 1.06 [0.71] | 0.81 [0.032] | 1.34 [0.9] |
| 28 | 7/0.13 | 7/36 | 0.09 | 0.76 [0.030] | 1.43 [0.96] | 0.89 [0.035] | 1.64 [1.1] |
| 26* | 19/0.10 | 19/38 | 0.15 | 0.86 [0.034] | 2.08 [1.4] | 1.02 [0.040] | 2.38 [1.6] |
| 24 | 19/0.13 | 19/36 | 0.25 | 1.02 [0.040] | 2.98 [2.0] | 1.17 [0.046] | 3.57 [2.4] |
| 22 | 19/0.16 | 19/34 | 0.40 | 1.19 [0.047] | 4.46 [3.0] | 1.37 [0.054] | 5.20 [3.5] |
| 20 | 19/0.20 | 19/32 | 0.60 | 1.40 [0.055] | 6.70 [4.5] | 1.57 [0.062] | 7.59 [5.1] |
| 18 | 19/0.25 | 19/30 | 1.00 | 1.65 [0.065] | 10.12 [6.8] | 1.85 [0.073] | 11.46 [7.7] |
| 16 | 19/0.29 | 19/29 | 1.25 | 1.83 [0.072] | 12.80 [8.6] | 2.06 [0.081] | 14.58 [9.8] |
| 14 | 19/0.36 | 19/27 | 2.00 | 2.26 [0.089] | 19.64 [13.2] | 2.49 [0.098] | 21.88 [14.7] |
| 12 | 37/0.32 | 37/28 | 3.00 | 2.74 [0.108] | 30.06 [20.0] | 2.97 [0.117] | 32.89 [22.1] |
| 10 | 37/0.40 | 37/26 | 5.00 | 3.28 [0.129] | 46.28 [31.1] | 3.71 [0.146] | 52.98 [35.6] |
| 8 | 133/0.29 | 133/29 | 8.30 | — | — | 5.23 [0.206] | 91.97 [61.8] |

*For 44A0211-26 the stranding is 7/0.16mm 7/34 AWG

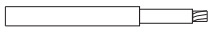

**44A031X (2500 V)**
**Primary Wire**

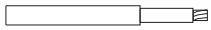

**44A081X (600 V)**
**Airframe Wire**

**44A012X (600 V)**
**Twisted Pair**

| Wire Size (AWG) | Stranding (mm) | Stranding #/AWG | CSA (mm²) | 44A031X (2500 V) Nom. OD | 44A031X (2500 V) Max. Weight (g/m) lb/kft | 44A081X (600 V) Nom. OD | 44A081X (600 V) Max Weight (g/m) lb/kft | 44A012X (600 V) Nom. OD | 44A012X (600 V) Max. Weight (g/m) lb/kft |
|---|---|---|---|---|---|---|---|---|---|
| 30 | 7/0.10 | 7/38 | 0.06 | — | — | — | — | 1.37 [0.054] | 2.38 [1.6] |
| 28 | 7/0.13 | 7/36 | 0.09 | — | — | — | — | 1.52 [0.060] | 3.13 [2.1] |
| 26 | 19/0.10 | 19/38 | 0.15 | 1.35 [0.053] | 3.13 [2.1] | 1.22 [0.048] | 2.98 [2.0] | 1.73 [0.068] | 4.31 [2.9] |
| 24 | 19/0.13 | 19/36 | 0.25 | 1.44 [0.057] | 4.46 [3.0] | 1.37 [0.054] | 3.87 [2.6] | 2.03 [0.080] | 6.39 [4.3] |
| 22 | 19/0.16 | 19/34 | 0.40 | 1.75 [0.069] | 6.40 [4.3] | 1.57 [0.062] | 5.65 [3.8] | 2.38 [0.094] | 9.37 [6.3] |
| 20 | 19/0.20 | 19/32 | 0.60 | 1.98 [0.078] | 9.08 [6.1] | 1.78 [0.070] | 8.04 [5.4] | 2.79 [0.110] | 13.98 [9.4] |
| 18 | 19/0.25 | 19/30 | 1.00 | 2.23 [0.088] | 12.95 [8.7] | 2.03 [0.080] | 11.91 [8.0] | 3.30 [0.130] | 21.27 [14.3] |
| 16 | 19/0.29 | 19/29 | 1.25 | 2.46 [0.097] | 16.22 [10.9] | 2.26 [0.089] | 14.73 [9.9] | 3.65 [0.144] | 26.93 [18.1] |
| 14 | 19/0.36 | 19/27 | 2.00 | 2.92 [0.115] | 24.10 [16.2] | 2.74 [0.108] | 22.17 [14.9] | 4.52 [0.178] | 42.25 [28.4] |
| 12 | 37/0.32 | 37/28 | 3.00 | 3.32 [0.131] | 36.01 [24.2] | 3.20 [0.126] | 32.59 [21.9] | 5.48 [0.216] | 65.91 [44.3] |
| 10 | 37/0.40 | 37/26 | 5.00 | 4.09 [0.161] | 54.32 [36.5] | 3.94 [0.155] | 52.08 [35.0] | — | — |
| 8 | 133/0.29 | 133/29 | 8.30 | 96.20 [0.219] | 96.73 [65.0] | 92.94 [0.214] | 93.46 [62.8] | — | — |



Dimensions are shown for reference purposes only. Specifications subject to change.

Dimensions are in millimeters unless otherwise specified.

USA: +1 800 522 6752
Asia Pacific: +86 0 400 820 6015
UK: +44 800 267 666

For additional support numbers please visit www.te.com

## SPEC 44 (Continued)

### Shielded and Jacketed Cable

44A111X (600 V)
1 Conductor

44A121X (1000 V)
1 Conductor

| Wire Size (AWG) | Stranding (mm) | Stranding #/AWG | 44A111X (600 V) Nom. OD | 44A111X (600 V) Max. Weight (g/m) lb/kft | 44A121X (1000 V) Nom. OD | 44A121X (1000 V) Max. Weight (g/m) lb/kft |
|---|---|---|---|---|---|---|
| 30 | 7/0.10 | 7/38 | 1.54 [0.061] | 5.21 [3.5] | — | — |
| 28 | 7/0.13 | 7/36 | 1.61 [0.063] | 5.80 [3.9] | — | — |
| 26 | 19/0.10 | 19/38 | 1.57 [0.065] | 6.84 [4.6] | 1.73 [0.068] | 6.85 [4.6] |
| 24 | 19/0.13 | 19/36 | 1.83 [0.072] | 8.63 [5.8] | 1.98 [0.078] | 9.67 [6.5] |
| 22 | 19/0.16 | 19/34 | 2.01 [0.079] | 10.71 [7.2] | 2.24 [0.088] | 12.35 [8.3] |
| 20 | 19/0.20 | 19/32 | 2.26 [0.089] | 14.73 [9.9] | 2.54 [0.100] | 17.41 [11.7] |
| 18 | 19/0.25 | 19/30 | 2.62 [0.103] | 20.68[13.9] | 2.82 [0.111] | 22.62 [15.2] |
| 16 | 19/0.29 | 19/29 | 2.79 [0.110] | 24.55 [16.5] | 3.02 [0.119] | 26.64 [17.9] |
| 14 | 19/0.36 | 19/27 | 3.22 [0.127] | 34.08 [22.9] | 3.45 [0.136] | 36.16 [24.3] |
| 12 | 37/0.32 | 37/28 | 3.70 [0.146] | 47.77 [32.1] | 4.14 [0.155] | 49.56 [33.3] |

Other sizes are also available in some constructions depending on conductor type and construction required.

44A181X (600 V)
1 Conductor

44A112X (600 V)
2 Conductor

| Wire Size (AWG) | 44A181X (600 V) Nom. OD | 44A181X (600 V) Max. Weight (g/m) lb/kft | 44A112X (600 V) Nom. OD | 44A112X (600 V) Max. Weight (g/m) lb/kft |
|---|---|---|---|---|
| 30 | — | — | 2.23 [0.088] | 8.20 [5.8] |
| 28 | — | — | 2.38 [0.094] | 9.40 [6.6] |
| 26 | — | — | 2.59 [0.102] | 12.05 [8.1] |
| 24 | 2.26 [0.089] | 11.76 [ 7.9] | 2.99 [0.118] | 16.82 [11.3] |
| 22 | 2.57 [0.101] | 15.48 [10.4] | 3.35 [0.132] | 21.57 [14.5] |
| 20 | 2.77 [0.109] | 19.19 [12.9] | 3.76 [0.148] | 27.97 [18.8] |
| 18 | 3.02 [0.119] | 24.11 [16.2] | 4.32 [0.170] | 38.24 [25.7] |
| 16 | 3.25 [0.128] | 28.13 [18.9] | 4.67 [0.184] | 44.94 [30.2] |
| 14 | 3.73 [0.147] | 38.69 [26.0] | 5.53 [0.218] | 64.28 [43.2] |
| 12 | 4.19 [0.165] | 52.38 [35.2] | 6.50 [0.256] | 91.51 [61.5] |

Other sizes are also available in some constructions depending on conductor type and construction required.





Catalog 1654025
Revised 3-13

www.te.com

Dimensions are shown for reference purposes only. Specifications subject to change.

Dimensions are in millimeters unless otherwise specified.

USA: +1 800 522 6752
Asia Pacific: +86 0 400 820 6015
UK: +44 800 267 666

For additional support numbers please visit www.te.com

## SPEC 55

### Product Facts

- **Resistant to electrical arc tracking in wet or dry conditions**
- **Single or dual wall constructions**
- **Small size, ultra light weight**
- **Exceptional chemical resistance**
- **-65°C to 200°C [-85°F to 392°F]**

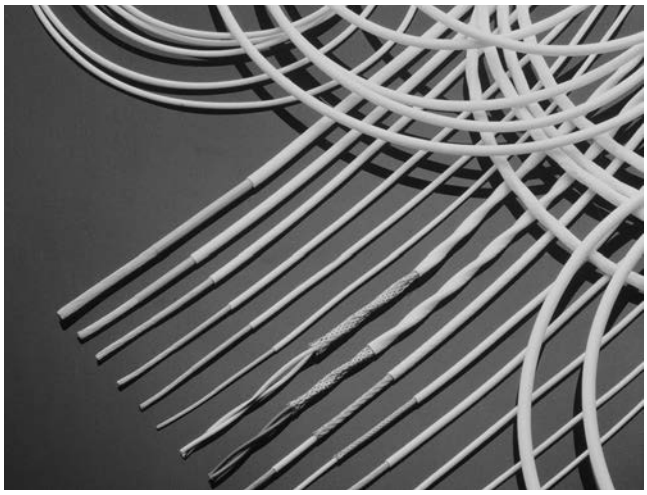

### Applications

SPEC 55 wire is insulated with modified radiation cross-linked ETFE polymer. It has a temperature rating of -65°C to 200°C [-85°F to 392°F] continuous using a silver plated copper conductor, and combines the easy handling of a flexible wire with excellent scrape abrasion and cut-through characteristics.

The dual wall airframe construction of SPEC 55 wire is currently used on numerous aircraft programs. It has a choice of two total wall thicknesses, 0.25 [.010] (55A08XX 10 mil) and 0.2 [.008] (55A02XX 8 mil). Both have a contrasting core color to act as a damage indicator. Chosen for its balance of properties, SPEC 55 wire has outstanding resistance to chemicals and solvents, excellent electrical arc track resistance, and is not susceptible to UV and moisture degradation. Single wall equipment wire constructions are available in 0.10 [.004] (55/03XX 4 mil) and 0.15 [.006] (6 mil) wall thicknesses for use inside black boxes where flexibility and solder-iron resistance make it a wire which is very easy to install reliably.

Both single and dual wall insulated wires are available in twisted pairs, triples, etc., and as shielded and jacketed cables.

### Physical Characteristics

#### Size and Weight

SPEC 55 wire provides one of the most comprehensive wiring product ranges for aerospace users, with a wide choice of conductor sizes and insulation wall thicknesses.The dual wall airframe wire has an insulation wall thickness of either 0.2 [.008] or 0.25 [.010] for robustness in unprotected harnesses and has excellent wire to wire abrasion properties.

The single wall equipment wire has a 0.15 [.006] wall thickness for use inside equipment and protected harnesses. For high density, interconnect wiring, the 450 volt 55M041X series of equipment wire has a nominal 0.1 [.004] wall and provides considerable weight and size savings over other comparable wires.

#### Handling

The excellent flexibility and handleability makes SPEC 55 the ideal wire to install, both in new aircraft and equipment and for maintenance purposes. The wire is easily stripped with conventional tooling. The insulation is readily marked by hot stamp, ink jet or laser, and can be potted without pre-etching.

### SPEC 55PC Wire and Cable Insulation System

This product was originally developed to meet Boeing's material standard BMS13-48 for the 777 airliner. SPEC 55PC provides lightweight, compact insulation that matches the proven performance of our SPEC 55 wire. Today, 55PC is specified and utilized on the majority of aerospace platforms worldwide.

TE's rigorous, statistical-process-controlled manufacturing has produced wiring that is rugged and versatile enough for a wide range of commercial and defense aerospace applications, including electronic hook-ups in harsh, open airframe environments.

SPEC 55PC wire and cable systems feature an 8-mil airframe wire that is lighter and smaller than typical 10-mil wire, with little reduction in key mechanical performance features. SPEC 55PC wire offers flame resistance superior to FAA standards and also resists scrape abrasion, notch, propagation, cut-through, and electrical arc tracking.

- Meets Boeing material standard BMS 13-48.
- Exceeds FAR 25 test requirements for flame resistance and smoke density.

| Available in: | |
|---|---|
| Americas | ■ |
| Europe | ■ |
| Asia Pacific | ■ |



Catalog 1654025
Revised 3-13

www.te.com

Dimensions are shown for reference purposes only. Specifications subject to change.

Dimensions are in millimeters unless otherwise specified.

USA: +1 800 522 6752
Asia Pacific: +86 0 400 820 6015
UK: +44 800 267 666

For additional support numbers please visit www.te.com

## SPEC 55 (Continued)

### Specifications

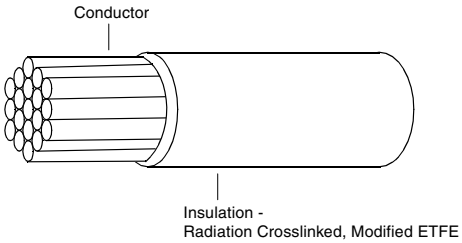


**SPEC 55 Insulation System - Single Wall**

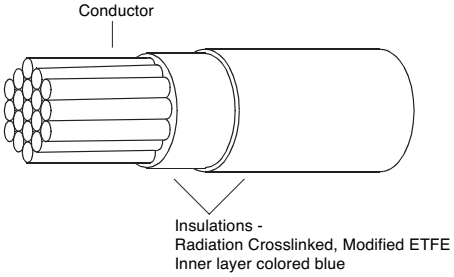


**SPEC 55 Insulation System - Dual Wall**

| **SAE AS22759/32-35 and /41 to /46 and NEMA-WC-27500 (Cables)** |
|---|
| Defense Standard 61-12 Part 33 Issue 5 |
| Part 1001 and Part 1002 |
| VDE 9426, 9427, 9428 |
| British Standard 3G233 |
| Boeing BMS 13-48 |
| Airbus ABS 0820 to 0826 |
| NASA preferred product list |
| European Space Agency 3901/012, 3901/020 and 3901/022 |
| TE Specification 55 |
| Civil Aviation Authority Accessory Approval E11623 |

**NOTE:**
Please check with TE personnel to ensure the product you wish to purchase is manufatured and released to the specification required.

### Typical Properties

| | |
|---|---|
| Temperature rating (Tin plated conductor) | -65°C to +150°C [-85°F to +302°F] |
| (Silver or nickel plated conductor) | -65°C to +200°C [-85°F to +392°F] |
| Thermal endurance | 200 °C [392°F], 10000 h |
| Scrape abrasion (BS 3G233) | >100 cycles at 150°C [302°F] |
| Flexing endurance (Boeing BSS 7324) | >1000 cycles |
| Voltage rating | 600 V, 1000V |
| Tensile strength + elongation (core only) | (Dual wall wire) 35 N/mm², 125% min. |
| Tensile strength + total elongation (core & primary jacket) | (Dual wall wire) 35 N/mm², 75% min. |
| Notch propagation BS 3G230 0.05 mm notch | Pass |
| Solder iron resistance (370 °C, 1 minute) | Pass |
| Solderability - Tin plated copper conductor BS 3G233 conditions | <0.8 secs to wet |
| Shrinkage | <1% |
| Long term water resistance | Will not hydrolyze |
| Permitivity 1 KHz (ASTM D150) | 2.7 |
| Dissipation factor (ASTM D150) | 0.001 |
| FAR 25<br>Afterburn (sec)<br>Burn length | ~~0~~<br>30 sec. max.<br>75 mm [3 in.] max. |







Dimensions are shown for reference purposes only. Specifications subject to change.

Dimensions are in millimeters unless otherwise specified.

USA: +1 800 522 6752
Asia Pacific: +86 0 400 820 6015
UK: +44 800 267 666

For additional support numbers please visit www.te.com

## SPEC 55 (Continued)

### Environmental Performance

**Temperature Rating**

SPEC 55 wire and cable is rated for continuous operation from -65°C to +200°C [-85°F to +392°F] and for short periods at temperatures as high as 400°C [752°F].

**Mechanical Performance**

Radiation crosslinking of the SPEC 55 insulation significantly improves the following mechanical characteristics; scrape (sharp edges), cross wire abrasion, cut-through resistance and creep resistance.

**Solder Iron/Overload Resistance**

Radiation crosslinking ensures that the insulation resists melting at high temperatures. As a result SPEC 55 wire is resistant to hot solder irons and current overloads which would melt most thermoplastic insulation.

**Chemical Resistance**

SPEC 55 is unaffected by all commonly used chemicals, eg. fuels, hydraulic fluids, defluxing agents, cleaners, coolants and de-icers. It also shows excellent resistance to weathering (UV, ozone, pollutants, water).

**Space Wire**

SPEC 55 is available in special versions suitable for use in outer space meeting both ESA and NASA requirements for outgassing.

**Flammability**

Special additives increase the flame retardance of SPEC 55 compared to unirradiated ETFE so that it meets the latest high performance tests, eg. BS 3G230 and vertical test FAR25.

**Electrical Arc Tracking Resistance**

SPEC 55 insulation demonstrates resistance to arc tracking under both wet and dry conditions at aircraft system voltages.

### SPEC 55 Wire & Cable: Standard Constructions, Nominal Sizes, Strandings, Diameters and Weights

| Conductor | Primary Wire | Twisted Pair | Shielded & Jacketed | |
|---|---|---|---|---|
| | | | Single | Pair |
| | | | 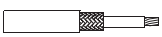 | |

**55PC - Extra Light Weight Constructions**

For applications where weight is critical, light weight tight tolerance conductors and insulation are available. These are manufactured using statistical process control methods and achieve weights that are equal or lighter than the equivalent polyimide/PTFE constructions.



Dimensions are shown for reference purposes only. Specifications subject to change.

Dimensions are in millimeters unless otherwise specified.

USA: +1 800 522 6752
Asia Pacific: +86 0 400 820 6015
UK: +44 800 267 666

For additional support numbers please visit www.te.com

## SPEC 55 (Continued)

### 55A - AWG Conductor: Equipment/Interconnect Wires & Cables

| Wire Size (AWG) | Stranding (mm) | 55A011X | | 55A012X | |
|---|---|---|---|---|---|
| | | Nom. OD | Max. Weight (g per m/lbs per kft) | Nom. OD | Max. Weight (g per m/lbs per kft) |
| 30 | 7/0.102 | 0.61 [0.024] | 0.98 [0.66] | 1.27 [0.048] | 1.94 [1.3] |
| 28 | 7/127 | 0.68 [0.027] | 1.35 [0.91] | 1.42 [0.054] | 2.68 [1.8] |
| 26 | 19/102 | 0.81 [0.032] | 2.08 [1.4] | 1.67 [0.064] | 4.16 [2.8] |
| 24 | 19/127 | 0.94 [0.037] | 2.98 [2.0] | 1.93 [0.074] | 5.96 [4.0] |
| 22 | 19/0.16 | 1.09 [0.043] | 4.17 [2.8] | 2.23 [0.086] | 8.63 [5.8] |
| 20 | 19/0.203 | 1.27 [0.050] | 6.40 [4.3] | 2.66 [0.102] | 13.24 [8.9] |
| 18 | 19/0.25 | 1.52 [0.060] | 9.67 [6.5] | 3.20 [0.122] | 20.09 [13.5] |
| 16 | 19/287 | 1.73 [0.068] | 12.35 [8.3] | 3.58 [0.138] | 25.75 [17.3] |
| 14 | 19/0.36 | 2.20 [0.085] | 19.34 [13.0] | 4.47 [0.172] | 39.58 [26.6] |
| 12 | 37/0.32 | 2.62 [0.103] | 29.32 [19.7] | 5.38 [0.208] | 59.97 [40.3] |
| 10 | 37/0.403 | 3.25 [0.128] | 47.32 [31.8] | 6.65 [0.256] | 96.58 [64.9] |
| 8 | 133/0.287 | 4.77 [0.188] | 87.50 [58.8] | 9.80 [0.376] | 178.58 [120.0] |

| Wire Size (AWG) | 55A111X | | 55A112X | |
|---|---|---|---|---|
| | Nom. OD | Max. Weight (g per m/lbs per kft) | Nom. OD | Max. Weight (g per m/lbs per kft) |
| 30 | 1.51 [0.057] | 5.06 [3.4] | 2.12 [0.081] | 8.03 [5.4] |
| 28 | 1.59 [0.060] | 5.80 [3.9] | 2.27 [0.087] | 9.37 [6.30] |
| 26 | 1.71 [0.065] | 6.85 [4.6] | 2.53 [0.097] | 11.75 [7.9]] |
| 24 | 1.84 [0.070] | 8.19 [5.5] | 2.80 [0.107] | 14.58 [9.8] |
| 22 | 1.99 [0.076] | 10.27 [6.9] | 3.07 [0.119] | 18.15 [12.2] |
| 20 | 2.20 [0.084] | 13.40 [9.0] | 3.50 [0.135] | 24.10 [16.2] |
| 18 | 2.45 [0.094] | 17.86 [12.0] | 4.10 [0.155] | 32.60 [21.9] |
| 16 | 2.67 [0.102] | 21.73 [14.6] | 4.43 [0.171] | 39.73 [26.7] |
| 14 | 3.10 [0.119] | 30.36 [20.4] | 5.30 [0.205] | 57.13 [38.4] |
| 12 | 3.55 [0.137] | 42.41 [28.5] | 6.30 [0.243] | 81.98 [55.1] |
| 10 | 4.20 [0.161] | 62.65 [42.1] | 7.40 [0.291] | 123.63 [83.1] |
| 8 | 5.80 [0.223] | 110.42 [74.2] | 10.60 [0.417] | 226.15 [152.0] |

### 55A - AWG Conductor: Airframe Wires & Cables

| Wire Size (AWG) | Stranding (mm) | 55A081X | | 55A082X | |
|---|---|---|---|---|---|
| | | Nom. OD | Max. Weight (g per m/lbs per kft) | Nom. OD | Max. Weight (g per m/lbs per kft) |
| 26 | 19/102 | 1.01 [0.040] | 2.5 [1.7] | 2.10 [0.080] | 5.06 [3.4] |
| 24 | 19/127 | 1.14 [0.045] | 3.4 [2.3] | 2.33 [0.090] | 6.84 [4.6] |
| 22 | 19/0.16 | 1.27 [0.050] | 4.8 [3.2] | 2.64 [0.102] | 9.98 [6.7] |
| 20 | 19/0.203 | 1.47 [0.058] | 7.0 [4.7] | 3.07 [0.118] | 14.73 [9.9] |
| 18 | 19/0.25 | 1.78 [0.070] | 10.7 [7.2] | 3.63 [0.140] | 21.88 [14.7] |
| 16 | 19/287 | 1.96 [0.077] | 13.4 [9.0] | 4.06 [0.156] | 27.53 [18.5] |
| 14 | 19/0.36 | 2.40 [0.094] | 20.5 [13.8] | 4.90 [0.190] | 42.26 [28.4] |
| 12 | 37/0.32 | 2.82 [0.111] | 30.5 [20.5] | 5.80 [0.224] | 63.00 [42.3] |
| 10 | 37/0.403 | 3.40 [0.134] | 48.3 [32.4] | 7.10 [0.272] | 98.96 [66.5] |

| Wire Size (AWG) | 55A181X | | 55A182X | |
|---|---|---|---|---|
| | Nom. OD | Max. Weight (g per m/lbs per kft) | Nom. OD | Max. Weight (g per m/lbs per kft) |
| 26 | 1.854 [0.073] | 7.89 [5.3] | 2.870 [0.113] | 14.29 [9.6] |
| 24 | 1.981 [0.078] | 9.37 [6.3] | 3.124 [0.123] | 16.37 [11.0] |
| 22 | 2.134 [0.084] | 11.76 [7.9] | 3.429 [0.135] | 20.68 [13.9] |
| 20 | 2.337 [0.092] | 14.88 [10.0] | 3.853 [0.151] | 27.08[18.2] |
| 18 | 2.616 [0.103] | 19.79[13.3] | 4.394 [0.173] | 36.46 [24.5] |
| 16 | 2.819 [0.111] | 23.81[16.0] | 4.801 [0.189] | 42.86 [28.8] |
| 14 | 3.251 [0.128] | 33.03 [22.2] | 5.715 [0.225] | 61.61 [41.4] |
| 12 | 3.683 [0.145] | 45.09 [30.3] | 6.578 [0.259] | 85.42 [57.4] |
| 10 | 4.192 [0.168] | 66.97[45.0] | 7.797 [0.307] | 127.54 [85.7] |







Dimensions are shown for reference purposes only. Specifications subject to change.

Dimensions are in millimeters unless otherwise specified.

USA: +1 800 522 6752
Asia Pacific: +86 0 400 820 6015
UK: +44 800 267 666

For additional support numbers please visit www.te.com

## SPEC 55 (Continued)

### 55PC - AWG Conductor: Statistical Process Controlled Airframe Wires & Cables

| Wire Size (AWG) | Stranding (mm) | 55PC021X | | 55PC022X | |
|---|---|---|---|---|---|
| | | Nom. OD | Target Weight (g per m/lbs per kft) | Nom. OD | Target Weight (g per m/lbs per kft) |
| 26 | 19/102 | 0.087 [0.035] | 2.05 [1.38] | — | — |
| 24 | 19/127 | 1.00 [0.0395] | 2.95 [1.98] | 2.00 [0.079] | 5.95 [4.00] |
| 22 | 19/0.16 | 1.15 [0.0455] | 4.31 [2.90] | 2.31 [0.091] | 8.74 [5.87] |
| 20 | 19/0.203 | 1.37 [0.0540] | 6.51 [4.38] | 2.74 [0.108] | 13.2 [8.87] |
| 18 | 19/0.25 | 1.61 [0.0635] | 9.81 [6.59] | 3.22 [0.127] | 19.84 [13.33] |
| 16 | 19/287 | 1.80 [0.0710] | 12.46 [8.37] | 3.60 [0.142] | 25.21 [16.94] |
| 14 | 19/.036 | 2.18 [0.0860] | 19.17 [12.88] | 4.36 [0.172] | 38.80 [26.07] |
| 12 | 37/0.32 | 2.66 [0.1047] | 29.36 [19.73] | 5.30 [0.209] | 59.42 [39.93] |
| 10 | 37/0.403 | 3.27 [0.1290] | 46.31 [31.12] | 6.55 [0.258] | 93.92 [62.99] |

| Wire Size (AWG) | 55PC121X | | 55PC122X | |
|---|---|---|---|---|
| | Nom. OD | Target Weight (g per m/lbs per kft) | Nom. OD | Target Weight (g per m/lbs per kft) |
| 26 | 1.52 [0.064] | 6.54 [4.4] | 2.33 [0.100] | 11.34 [7.62] |
| 24 | 1.65 [0.069] | 7.86 [5.28] | 2.89 [0.109] | 13.90 [9.34] |
| 22 | 1.80 [0.075] | 9.81 [6.59] | 2.89 [0.122] | 17.89 [12.02] |
| 20 | 2.00 [0.083] | 12.83 [8.62] | 3.30 [0.139] | 23.84 [16.02] |
| 18 | 2.23 [0.093] | 17.01 [11.43] | 3.78 [0.158] | 32.10 [21.57] |
| 16 | 2.44 [0.100] | 20.36 [13.68] | 4.16 [0.174] | 39.00 [26.21] |
| 14 | 2.79 [0.116] | 28.69 [19.28] | 4.92 [0.204] | 55.21 [37.10] |
| 12 | 3.30 [0.135] | 40.73 [27.37] | 5.92 [0.243] | 80.23 [53.45] |
| 10 | 3.98 [0.159] | 59.90 [40.25] | 7.39 [0.297] | 123.65 [83.09] |

X = 1 -Tin plated copper conductor.
4 -Silver plated high strength copper alloy conductor. (Recommended for size 24 & 26 in airframe applications and mandatory for CAA release.)

**SPEC 55** (Continued)

## Part Numbering System 55A and 55LF — General Purpose

**55 A 1 1 2 1 * - AWG - 2/6 - 9**

**Jacket Color** (code per MIL-STD-681)
Codes same as for Primary Wire Insulation Color

**Primary Wire Insulation Color** (code per MIL-STD-681)

| | | |
|---|---|---|
| 0 - Black | 4 - Yellow | 8 - Gray |
| 1 - Brown | 5 - Green | 9 - White |
| 2 - Red | 6 - Blue | |
| 3 - Orange | 7 - Violet | |

**Conductor Size (AWG)**

***Optional Shield Material**
H - High strength copper alloy, shield coating same as conductor coating (No designator defaults to coated "copper" shield, if any)

**Conductor Type**
1 - Tin-coated copper
2 - Silver-coated copper
3 - Nickel-coated copper
4 - Silver-coated high strength copper alloy
6 - Nickel-coated high strength copper alloy
A - Silver-coated ultra high-strength copper alloy

**Number of Conductors**
1 through 10 (designator for 10 conductor = 0)

**Class of Wire**
1 - 600 volt, lightweight
2 - 600 volt, medium weight
4 - 450V (55M 20-30 AWG only)
7 - 1000 volt, heavy duty, airframe
8 - 600 volt, normal weight, airframe

**Constructions**
0 - Primary wire; or unshielded & unjacketed cable
1 - **Round braid shielded & jacketed cable
2 - ** Flat braid shielded& jacketed cable
3 - ** Round braid shielded cable, no jacket
4 - Jacketed cable, no shield
5 - ** Spiral braid shielded & jacketed cable
6-9- Special constructions

**Product Type**
A - General purpose
AC - General purpose, 90% min. shield coverage
AF - General purpose, low fluoride
D - Defense Standard 61-12 Part 33
LF - General purpose, ultra low fluoride
LFC- General purpose, ultra low fluoride, 90% min. shield coverage
M - 450 Volt

**Basic Product Number**

**Except for p/ns with Shield Material designation "H", shield coating same as conductor coating, **except**:
- for Conductor Type 4, shield shall be tin-coated cooper
- for Conductor Types 6 and A, flat braid only, shield shall be tin-coated copper

The UK manufactures and supply large volumes of 55Mx4x4 (450 volt) construction wires and cables for Aerospace and Multisport applications.

**Part Numbering System is a cross reference only and not meant for part creation.**

**SPEC 55** (Continued)

## Part Numbering System
## 55/ — Outer Space

**55 / 1 3 2 1 * - AWG - 0/9 - 9**

**Jacket Color** (code per MIL-STD-681)
Codes same as for Primary Wire Insulation Color

**Primary Wire Insulation Color** (code per MIL-STD-681)

| | | |
|---|---|---|
| 0 - Black | 4 - Yellow | 8 - Gray |
| 1 - Brown | 5 - Green | 9 - White |
| 2 - Red | 6 - Blue | |
| 3 - Orange | 7 - Violet | |

**Conductor Size (AWG)**

***Optional Shield Material**
H - High strength copper alloy, shield coating same as conductor coating (No designator defaults to coated "copper" shield, if any)

**Conductor Type**
1 - Tin-coated copper
2 - Silver-coated copper
3 - Nickel-coatedcopper
4 - Silver-coated high strength copper alloy
6 - Nickel-coated high strength copper alloy
A - Silver-coated ultra high-strength copper alloy

**Number of Conductors**
1 thorugh 10 (designator for 10 conductor = 0)

**Class of Wire**
1 - 600 volt, lightweight
2 - 600 volt, medium weight
3 - 600 volt, ultra lightweight
4 - 300 volt (discontinued)
7 - 1000 volt, heavy duty
8 - 600 volt, normal weight

**Constructions**
0 - Primary wire; or unshielded & unjacketed cable
1 - **Round braid shielded & jacketed cable
2 - ** Flat braid shielded & jacketed cable
3 - ** Round braid shielded cable, no jacket
4 - Jacketed cable, no shield
5 - ** Spiral braid shielded & jacketed cable
6-9- Special constructions

**Product Type**
/ - Outer Space
/F - Outer Space, low fluoride
/LF- Outer Space, ultra low fluoride
/P - Outer Space, shield coating same as conductor coating (valid with the following conductor types only: 4 for round braid; 4, 6 or A for flat braid)

**Basic Product Number**

**For 55/: Except for p/ns with Shield Material designation "H", shield coating same as conductor coating, **except**:
- for Conductor Type 4, shield shall be tin-coated cooper; - for Conductor Types 6 and A, flat braid only, shield shall be tin-coated copper. For 55/P, /LF: Shield coating same as conductor coating.
For product released to ESCC 3901/012, 3901/020 and/or 3901/022, please refer to TE for product designation and construction.

**Part Numbering System is a cross reference only and not meant for part creation.**



Catalog 1654025
Revised 3-13

www.te.com

Dimensions are shown for reference purposes only. Specifications subject to change.

Dimensions are in millimeters unless otherwise specified.

USA: +1 800 522 6752
Asia Pacific: +86 0 400 820 6015
UK: +44 800 267 666

For additional support numbers please visit www.te.com

**SPEC 55** (Continued)

## Part Numbering System 55PC and 55 PLF — Process Control

**55 PC 1 1 2 4 * - AWG - 2/6 - 9**

**Jacket Color** (code per MIL-STD-681)
Codes same as for Primary Wire Insulation Color

**Primary Wire Insulation Color** (code per MIL-STD-681)

| | | |
|---|---|---|
| 0 - Black | 4 - Yellow | 8 - Gray |
| 1 - Brown | 5 - Green | 9 - White |
| 2 - Red | 6 - Blue | |
| 3 - Orange | 7 - Violet | |

**Conductor Size (AWG)**

***Optional Shield Material**
H - High strength copper alloy, shield coating same as conductor coating (No designator defaults to coated "copper" shield, if any)

**Conductor Type**
1 - Tin-coated copper
2 - Silver-coated copper
3 - Nickel-coated copper
4 - Silver-coated high strength copper alloy
5 - Aluminum
6 - Nickel-coated high strength copper alloy
A - Silver-coated ultra high-strength copper alloy

**Number of Conductors**
1 through 10 (designator for 10 conductor = 0)
0 - 10 conductors

**Class of Wire**
1 - 600 volt, lightweight, general purpose, single wall
2 - 600 volt, medium weight, general purpose
5 - 600 volt, lightweight, general purpose, dual wall
7 - 1000 volt, heavy duty, airframe, general purpose
8 - 600 volt, normal weight, airframe, general purpose

**Constructions**
0 - Primary wire; or unshielded & unjacketed cable
1 - **Round braid screened & jacketed cable
2 - ** Flat braid screened & jacketed cable
3 - ** Round braid, screened cable, no jacket
4 - Jacketed cable, no shield
5 - ** Spiral braid shielded & jacketed cable
6-9- Special constructions

**Product Type**
PC - Process Control
PCF- Process Control, low fluoride
PCFL-Process Control, low fluoride (lite)
PCL - Process Control (lite)
PCT- Process Control (stripping thread under jacket, and shield, if any)
PLF - Process Control, ultra low fluoride
PLFL-Process Control, ultra low fluoride (lite)

**Basic Product Number**

**Except for p/ns with Shield Material designation "H", shield coating same as conductor coating, **except**:
For 55PCL - for conductor type 6, flat braid only, shield shall be tin-coated copper
For 55PC and 55PCT - for conductor Type 4 and A, shield shall be tin-coated cooper
for Conductor Type 6, flat braid only, shield shall be tin-coated copper

**Part Numbering System is a cross reference only and not meant for part creation.**







Dimensions are shown for reference purposes only. Specifications subject to change.

Dimensions are in millimeters unless otherwise specified.

USA: +1 800 522 6752
Asia Pacific: +86 0 400 820 6015
UK: +44 800 267 666

For additional support numbers please visit www.te.com

## SPEC 55 (Continued)

| | |
|---|---|
| **Typical Ordering Example** | 3 conductors, red, yellow, blue, 600 volt equipment wire with overall round braid, 20 AWG tinned conductor and white jacket: total part number is 55A1131-20-2/4/6-9. |
| **Ordering Information** | A list of stock policy items can be identified by contacting TE. |

## SPEC 55 Part Numbering System — General

| Temperature Rating | Conductor Material | AWG Range Available | Part Number | MIL-SPEC No. |
|---|---|---|---|---|
| **600-V Lightweight Single-wall Hookup Wire, .152 [.006] Nominal Wall** | | | | |
| 150°C [302°F] | Tin-coated copper | 12–30 | 55A0111 | M22759/32 |
| 200°C [392°F] | Silver-coated copper | 12–28 | 55A0112 | M22759/44 |
| 200°C [302°F] | Nickel-coated copper | 12–28 | 55A0113 | M22759/45 |
| 200°C [392°F] | Silver-coated high-strength alloy | 20–30 | 55A0114 | M22759/33 |
| 200°C [392°F] | Nickel-coated high-strength alloy | 20–28 | 55A0116 | M22759/46 |
| **600-V Lightweight Dual-wall Airframe Wire, .203 [.008] Nominal Wall** | | | | |
| 150°C [302°F] | Tin-coated copper | 6–26 | 55A0211 | — |
| 200°C [392°F] | Silver-coated copper | 10–26 | 55A0212 | — |
| 200°C [392°F] | Nickel-coated copper | 10–26 | 55A0213 | — |
| 200°C [392°F] | Silver-coated high-strength alloy | 18–30 | 55A0214 | — |
| 200°C [392°F] | Nickel-coated high-strength alloy | 16–26 | 55A0216 | — |
| **600-V Dual-wall Airframe Wire, .254 [.010] Nominal Wall** | | | | |
| 150°C [302°F] | Tin-coated copper | 00–24 | 55A0811 | M22759/34 |
| 200°C [392°F] | Silver-coated copper | 00–26 | 55A0812 | M22759/43 |
| 200°C [392°F] | Nickel-coated copper | 00–26 | 55A0813 | M22759/41 |
| 200°C [392°F] | Silver-coated high-strength alloy | 20–26 | 55A0814 | M22759/35 |
| 200°C [392°F] | Nickel-coated high-strength alloy | 20–26 | 55A0816 | M22759/42 |
| **1000-V Medium-Weight Dual-wall Airframe Wire, .381 [.015] Nominal Wall** | | | | |
| 150°C [302°F] | Tin-coated copper | 10–24 | 55A0711 | — |
| 200°C [392°F] | Silver-coated copper | 16–24 | 55A0712 | — |
| 200°C [392°F] | Nickel-coated copper | 16–24 | 55A0713 | — |
| 200°C [392°F] | Silver-coated high-strength alloy | 16–24 | 55A0714 | — |
| 200°C [392°F] | Nickel-coated high-strength alloy | 16–26 | 55A0716 | — |



Dimensions are shown for reference purposes only. Specifications subject to change.

Dimensions are in millimeters unless otherwise specified.

USA: +1 800 522 6752
Asia Pacific: +86 0 400 820 6015
UK: +44 800 267 666

For additional support numbers please visit www.te.com

**SPEC 55** (Continued)

## SPEC 55 Cable Constructions

| Construction | Number of Components | Component Conductor[1] | Shield Material[1] | Part Number | |
|---|---|---|---|---|---|
| | | | | Light Wt.[2] | Medium Wt. |
| Unshielded, unjacketed | 2–10 | 1 | — | 55*01X1-AWG-Y | 55*08X1-AWG-Y |
| | | 2 | — | 55*01X2-AWG-Y | 55*08X2-AWG-Y |
| | | 3 | — | 55*01X3-AWG-Y | 55*08X3-AWG-Y |
| | | 4 | — | 55*01X4-AWG-Y | 55*08X4-AWG-Y |
| | | 6 | — | 55*01X6-AWG-Y | 55*48X6-AWG-Y |
| Unshielded, jacketed | 2–10 | 1 | — | 55*41X1-AWG-Y | 55*48X1-AWG-Y |
| | | 2 | — | 55*41X2-AWG-Y | 55*48X2-AWG-Y |
| | | 3 | — | 55*41X3-AWG-Y | 55*48X3-AWG-Y |
| | | 4 | — | 55*41X4-AWG-Y | 55*48X4-AWG-Y |
| | | 6 | — | 55*41X6-AWG-Y | 55*48X6-AWG-Y |
| Shielded (round braid), jacketed | 1–10 | 1 | 1 | 55*11X1-AWG-Y | 55*18X1-AWG-Y |
| | | 2 | 2 | 55*11X2-AWG-Y | 55*18X2-AWG-Y |
| | | 3 | 3 | 55*11X3-AWG-Y | 55*18X3-AWG-Y |
| | | 4 | 1 | 55*11X4-AWG-Y | 55*18X4-AWG-Y |
| | | 6 | 3 | 55*11X6-AWG-Y | 55*18X6-AWG-Y |
| Shielded (flat braid), jacketed | 1–10 | 1 | 1 | 55*21X1-AWG-Y | 55*28X1-AWG-Y |
| | | 2 | 1 | 55*21X2-AWG-Y | 55*28X2-AWG-Y |
| | | 3 | 1 | 55*21X3-AWG-Y | 55*28X3-AWG-Y |
| | | 4 | 1 | 55*21X4-AWG-Y | 55*28X4-AWG-Y |
| | | 6 | 1 | 55*21X6-AWG-Y | 55*28X6-AWG-Y |

[1]Type of conductor or shield material:
1 = tin-coated copper
2 = silver-coated copper
3 = nickel-coated copper
4 = silver-coated high-strength copper alloy
6 = nickel-coated high-strength copper alloy
* = A or PC

[2] X = no. of wire components
Y = color code
For complete part number, see Part Numbering System on page 9-15.







Dimensions are shown for reference purposes only. Specifications subject to change.

Dimensions are in millimeters unless otherwise specified.

USA: +1 800 522 6752
Asia Pacific: +86 0 400 820 6015
UK: +44 800 267 666

For additional support numbers please visit www.te.com

**SPEC 55** (Continued)

## NEMA WC-27500 Cable Part Numbering System

**M27500 X AWG XX X X XX**

**Basic Specification Number**

**Component Wire ID/Shield Coverage Code**

| Shield Coverage 85% | Shield Coverage 90% | Component Wire Identification |
|---|---|---|
| - | C | Colored Stripes on White Wire (9/96/93/95/92/90/94/97/98/91... etc.) |
| A | D | Solid Color Wires (9/6/3/5/2/0/4/7/8/1...etc.) |
| B | E | Band Marks on Solid Colors (by AWG) |
| F | H | Alternate Colored Stripes (92/96/94/95/9/90/91/93/97/98...etc) |
| G | J | Alternate Solid Colors (2/6/4/5/9/0/1/3/7/8...etc.) |
| K | M | Number Marking on Solid Colors (by AWG) |
| L | N | Number Marking on White Wires |
| P | R | Band Marks on Colored Stripes (by AWG) |
| S | T | Band Marks on White Wires |

**Conductor Size (AWG)**

**Basic Wire Spec Code (SAE-AS-22759) and Slash Sheet**

SB - 32 = 55A0111
SC - 33 = 55A0114
SD - 34 = 55A0811
for 2 AWG and larger, use 55A8039
SE - 35 = 55A0814
SM - 41 = 55A0813
for 2 AWG and larger, use 55A8595
SN - 42 = 55A0816
SP - 43 = 55A0812
for 2 AWG and larger, use 55A6089
SR - 44 = 55A0112
SS - 45 = 55A0113
ST - 46 = 55A0116

**Number of Component Wires**

1 through 9; 10 Components = 0

**Shield Material and Style Code**

U - No shield
T - Tin-coated copper, round
J - Tin-coated copper, flat
S - Silver-coated copper, round
G - Silver-coated copper, flat
N - Nickel-coated copper, round
V - Tin-coated copper, round, double shield
W - Silver-coated copper, round, double shield

**Jacket Material and Style Code**

00 - No jacket
23 - Single jacket crosslinked, modified ETFE, white
73 - Double jacket crosslinked, modified ETFE, white

**Example:** **M27500-22SB3T23 = 55A1131-22-9/96/93-9**

Tyco Electronics Part No.
Military Part No.

**Part Numbering System is a cross reference only and not meant for part creation.**





Dimensions are shown for reference purposes only. Specifications subject to change.

Dimensions are in millimeters unless otherwise specified.

USA: +1 800 522 6752
Asia Pacific: +86 0 400 820 6015
UK: +44 800 267 666

For additional support numbers please visit www.te.com

## FlexLine (SPEC 80)

### Product Facts

- Reduced weight
- Flexibility
- Low outgassing
- Function over a broad temperature range
- Flammability
- Arc track resistance
- Resistance to atomic oxygen
- Radiation resistance
- High quality and reliability
- Ease of fabrication (into Harnesses due to flexibility)
- Agency approvals
- -65°C up to +200°C [-85°F up to +395°F]
- Small size
- 600V rating
- Optional high strand count for increased flexibility
- Variety of insulation/jacket options
- Dual wall and single wall options
- Easy to install
- Mechanically tough
- Compliance with FAR 25 flammability requirements
- Resistance to harsh fluids & solvents per SAE-AS-22759

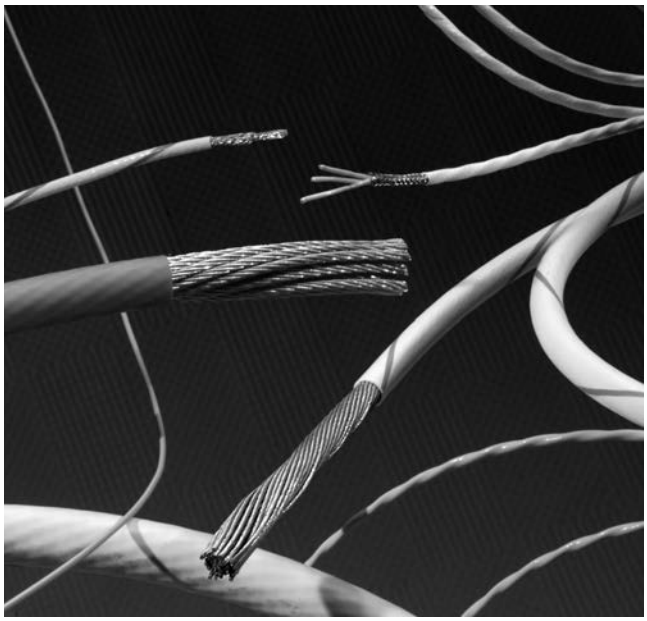

### Applications

FlexLine wire (also known as SPEC 80) is insulated with a flexible modified radiation cross-linked ETFE polymer. It has a temperature rating of -65°C to +200°C [-85°F to +395°F] continuous using silver copper conductor, and combines the easy handling of our SPEC 55 wire and cable with additional flexibility. FlexLine wire is used in a broad range of applications, from Hook-up wire to Power Cables.

FlexLine wire constructions provide maximum flexibility similar to the SAE-AS-22759 products in Mechanical, Chemical and Thermal properties.

| Available in: | Americas | Europe | Asia Pacific |
|---|---|---|---|
| | ■ | ■ | ■ |





Catalog 1654025
Revised 3-13

www.te.com

Dimensions are shown for reference purposes only. Specifications subject to change.

Dimensions are in millimeters unless otherwise specified.

USA: +1 800 522 6752
Asia Pacific: +86 0 400 820 6015
UK: +44 800 267 666

For additional support numbers please visit www.te.com

## FlexLine (SPEC 80) (Continued)

### FlexLine Insulation System

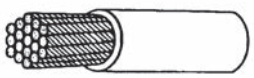

Single Wall

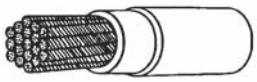

Dual Wall

**Single Wall 82 Wire**
High strand count conductors
Light weight
AWG sizes 28 to 00
(6-mil nominal insulation thickness)

**Dual Wall 81 Wire**
Standard M22759 conductor stranding
Increased toughness
AWG sizes 28 to 000
(10-mil nominal insulation thickness)

### Part Numbering System 81 & 82 — General Purpose, Outer Space

**82 A 1 1 2 1 - AWG - 0/9 - 9**

**Jacket Color** (code per MIL-STD-681)
Codes same as for Primary Wire Insulation Color

**Primary Wire Insulation Color** (code per MIL-STD-681)

| | | |
|---|---|---|
| 0 - Black | 4 - Yellow | 8 - Gray |
| 1 - Brown | 5 - Green | 9 - White |
| 2 - Red | 6 - Blue | |
| 3 - Orange | 7 - Violet | |

**Conductor Size (AWG)**

**Conductor Type**

| | |
|---|---|
| 1 - Tin-coated copper | 4 - Silver-coated high strength copper alloy |
| 2 - Silver-coated copper | |
| 3 - Nickel-coated copper | 6 - Nickel-coated high strength copper alloy |

**Number of Conductors**
1 through 10 (designator for 10 conductor = 0)

**Class of Wire**
1 - 600 volt, lightweight
8 - 600 volt, normal weight

**Construction**
0 - Primary wire or unshielded & unjacketed cable
1 - *Round-braid shielded & jacketed cable
2 - *Flat-braid shielded & jacketed cable
3 - *Round-braid shielded cable, no jacket
4 - Jacketed cable, no shield
5 - *Spiral- braid shielded & jacketed cable
6-9 Special constructions

**Product Type**
/ - Outer Space
A - General Purpose
AC- Same as A with 90% min. shield coverage
B - Discontinued

**Basic Product Number**
81 - Normal Stranding
82 - High Stranding

**Part Numbering System is a cross reference only and not meant for part creation.**

* Shield coating same as conductor coating except for the following:
- for conductor type 4, shield shall be tin-coated copper
- for conductor type 6, flat braid only, shield shall be tin-plated copper



Catalog 1654025
Revised 3-13

www.te.com

Dimensions are shown for reference purposes only. Specifications subject to change.

Dimensions are in millimeters unless otherwise specified.

USA: +1 800 522 6752
Asia Pacific: +86 0 400 820 6015
UK: +44 800 267 666

For additional support numbers please visit www.te.com

## Type 99M

### Product Facts

- Low flammability
- Low smoke generation
- Low toxicity index
- Low generation of corrosive gases
- Small size, lightweight

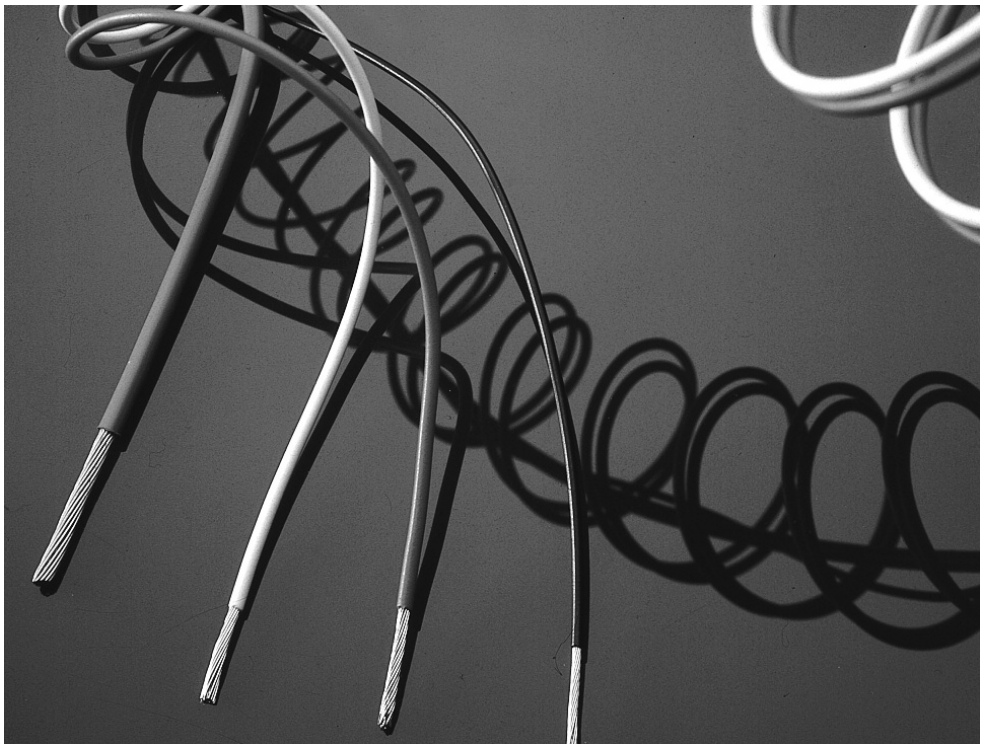

### Applications

Type 99M wire has a dual wall construction of radiation cross-linked modified polyester. This combines excellent mechanical performance and chemical resistance with a range of enhanced fire hazard properties. Type 99M wire is designed to meet the stringent low fire hazard performance now being specified by the UK Naval Defense Standard Authority for ship wiring and cabling.

During the 1980's there were major changes in the demands of many wire and cable specifications to reduce the risks associated with all aspects of fire hazards. Specifications such as Def Stan 61-12 Part 18, have been developed over the last decade demanding improved performance of wires and cables under fire conditions.

This has led to a tightening of the requirements for flammability, smoke generation, corrosive gas generation and hazardous fume emission. Type 99M wire achieves these improvements in performance whilst retaining small size, light weight, flexibility, handleability, resistance to carbon arc tracking and resistance to chemicals and fluids.

### Physical Characteristics

#### Handleability

Type 99M wire has been designed to be compatible with modern wiring and harnessing techniques. It is a flexible wire with virtually no springback once set. It is easily stripped with tools such as conventional die-blade strippers.

#### Small Size

Type 99M equipment wire has a nominal 0.2 mm insulation wall thickness which is comparable to other established thin wall wires such as SPEC 44 wire.

#### Light Weight

Type 99M wire is designed to have the same weights as SPEC 44 wire.

| Available in: | Americas | Europe | Asia Pacific |
|---|---|---|---|
| | ■ | ■ | ■ |





Catalog 1654025
Revised 3-13

www.te.com

Dimensions are shown for reference purposes only. Specifications subject to change.

Dimensions are in millimeters unless otherwise specified.

USA: +1 800 522 6752
Asia Pacific: +86 0 400 820 6015
UK: +44 800 267 666

For additional support numbers please visit www.te.com

## Type 99M (Continued)

### Approvals

| |
|---|
| TE WCD 281 |
| Defense Standard 61-12 Part 18 Issue 5 Type 1 |
| Italian Navy STN-SR-01 |

### Type 99M Wire and Cable - Nominal Sizes, Strandings and Weights

**99M011X (600 V)**
**Primary Wire**

**99M1111**
**Shielded & Jacketed**

**99M1121**
**Shielded & Jacketed**

### Primary Wires/Shielded and Jacketed Cables - 99M

| Size | Stranding (mm) | 99M011X (600 V) | | 99M1111 | | 99M1121 | |
|---|---|---|---|---|---|---|---|
| | | OD | Weight (g/m) | OD | Weight (g/m) | OD | Weight (g/m) |
| 26 | 19x0.10 | 0.88 [.035] | 2.00 | 1.80 [.071] | 7.5 | 2.91 [.115] | 13.3 |
| 24 | 19x0.12 | 0.98 [.039] | 3.00 | 1.90 [.075] | 9.2 | 3.20 [.126] | 16.6 |
| 22 | 19x0.15 | 1.13 [.044] | 4.40 | 2.05 [.081] | 11.1 | 3.52 [.139] | 20.5 |
| 20 | 19x0.20 | 1.40 [.055] | 6.50 | 2.30 [.091] | 14.6 | 4.02 [.158] | 27.7 |
| 18 | 19x0.25 | 1.65 [.065] | 9.90 | 2.55 [.100] | 19.3 | 4.57 [.180] | 37.1 |
| 16 | 19x0.30 | 1.90 [.075] | 14.15 | 2.95 [.116] | 24.9 | 5.13 [.202] | 48.5 |
| 14 | 37x0.25 | 2.25 [.089] | 18.62 | 3.13 [.123] | 30.9 | 5.72 [.225] | 60.5 |
| 12 | 37x0.32 | 2.60 [.102] | 25.70 | 3.48 [.137] | 43.1 | 6.42 [.253] | 81.3 |

### Typical Properties (wire only)

| Test | Method | Typical value |
|---|---|---|
| Temperature rating | BS 3G230 | 120°C [248°F] |
| Voltage rating | TE | 600 V thin wall |
| Tensile strength/elongation of insulation | — | 30 MPa/250% |
| Notch propagation (0.05 mm notch) | BS 3G230 | Pass |
| Shrinkage 200°C [392°F] | BS 3G230 | <1% |
| Low temperature bend | BS 3G230 | -55°C [-67°F] |
| Voltage withstand | BS 3G230 | 2.5 kV |
| Insulation resistance (20°C [68°F]) | BS 3G230 | 1000 M ohms km (min) |
| Pliability rating | Def Stan 61-12 (18) | 82 - Pliable |
| Fluid resistance | Def Stan 61-12 (18) | |
| Fuels - aircraft | | Pass |
| Oils - (IRM 903) | | Pass |
| Solvents | | Pass |



Catalog 1654025
Revised 3-13

www.te.com

Dimensions are shown for reference purposes only. Specifications subject to change.

Dimensions are in millimeters unless otherwise specified.

USA: +1 800 522 6752
Asia Pacific: +86 0 400 820 6015
UK: +44 800 267 666

For additional support numbers please visit www.te.com

## Type 99M (Continued)

### Environmental Properties

#### Mechanical Performance

Type 99M wire has good scrape abrasion and cut through performance complying with the requirements of Def. Standard 61-12 Part 18.

#### Fluid Resistance

Type 99M wire demonstrates outstanding resistance to most acids, alkalis, hydrocarbon solvents, fuels, lubricants and water.

#### Electrical Arc Tracking

Type 99M wire is resistant to electrical arc tracking.

#### Voltage Ratings

Standard available voltage ratings for Type 99M wire is 600 V (0.2 mm wall thickness).

### Fire Hazard Characteristics

#### Low Toxicity Index

Type 99M wire is designed to meet the low hazardous fume emission levels required in modern specifications. For example, the change in the Toxicity Index requirement from 1.5 to 0.2 between Issue 2 and Issue 5 of Def Stan 61-12 (Part 18), is met by Type 99M wire.

#### Flammability

Type 99M wire has passed the stringent flammability test requirements of Def. Standard 61-12 (Part 18).

#### Smoke Generation

Type 99M wire has been designed to meet stringent smoke tests such as those specified in Def Stan 61-12 (Part 18).

#### Corrosivity

Type 99M wire has a low corrosive gas emission, demonstrated by its low acid gas value, sufficient to pass the requirements of Def. Standard 61-12 Part 18.

### Fire Hazard Properties

| Test | Method | Typical value |
|---|---|---|
| Flammability | BS 3G230 | Pass |
| Toxicity index | Def Stan 61-12 (18) | 0.1 per meter of wire |
| Smoke index | Def Stan 61-12 (18) | 8 per meter of wire |
| Acid gas equivalent | TDE 76/P/76 | <1.5% |





Catalog 1654025
Revised 3-13

www.te.com

Dimensions are shown for reference purposes only. Specifications subject to change.

Dimensions are in millimeters unless otherwise specified.

USA: +1 800 522 6752
Asia Pacific: +86 0 400 820 6015
UK: +44 800 267 666

For additional support numbers please visit www.te.com

## Type 99M (Continued)

### Part Numbering System

**99 X X X X X- Size- X/X- X**

**Jacket Color**
(in accordance with MIL-STD-681, black preferred)

**Primary Wire Insulation Color**
0=Black 1=Brown 2=Red 2L=Pink 3=Orange 4=Yellow
45=Yellow/Green 5=Green 6=Blue 7=Violet 8=Grey 9=White
Additional number after base color indicates stripe

**Conductor Size**

**Conductor Type**
1 - Tin-plated copper

**Number of Conductors**
1, 2, 3, 4 etc.

**Class of Wire**
1 - 600V equipment wire

**Constructions**
0 - Primary wire & unscreened, unjacketed cables
1 - Round braid screened & jacketed*
9 - Special construction

**Wire Type**
M - Military wire

**Basic Specification Number**

* The cable jackets are TE Zerohal and the preferred color is black.

**Part Numbering System is a cross reference only and not meant for part creation.**



Catalog 1654025
Revised 3-13

www.te.com

Dimensions are shown for reference purposes only. Specifications subject to change.

Dimensions are in millimeters unless otherwise specified.

USA: +1 800 522 6752
Asia Pacific: +86 0 400 820 6015
UK: +44 800 267 666

For additional support numbers please visit www.te.com

## Zerohal 100A

### Product Facts

- Halogen free, low smoke
- Highly flame retardant
- Flexible, easy to install
- Small size, lightweight (thin wall construction)

### Applications

TE's latest generation LFH, thinwall wire has been designed for use primarily in signal, control and light power circuits in subway, regional and high speed trains. It is ideal for applications where space and weight are at a premium; fire safety is important; reliability is imperative; rugged properties to withstand service in an RMT environment are required.

The construction is a dual wall combination of TE formulated polymer blends developed to meet the specification requirements while maintaining the desirable features of small size, lightweight, flexibility, non-wrinkling, ease of stripping, compatibility with standard stripping equipment, lack of recoil and mechanical robustness.

### Physical Characteristics

#### Handleability

Zerohal 100A wire has been designed for minimum recoil during harnessing operations, to be readily handleable by modern wiring and harnessing techniques and to be easily stripped with standard equipment and tools.

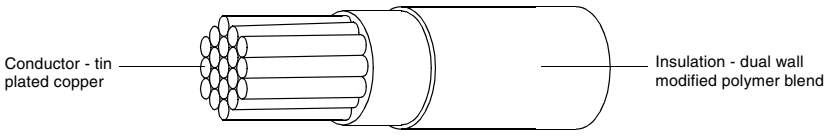


| Available in: | Americas | Europe | Asia Pacific |
|---|---|---|---|
| | ■ | ■ | ■ |





Catalog 1654025
Revised 3-13

www.te.com

Dimensions are shown for reference purposes only. Specifications subject to change.

Dimensions are in millimeters unless otherwise specified.

USA: +1 800 522 6752
Asia Pacific: +86 0 400 820 6015
UK: +44 800 267 666

For additional support numbers please visit www.te.com

## Zerohal 100A (Continued)

### Typical Properties

| Test | Method | Typical Values |
|---|---|---|
| **Physical Properties** | | |
| Insulation Tensile Strength and Ultimate Elongation | ASTM D3032 | Tensile Strength 3500 psi minimum<br>Ultimate Elongation 250% minimum |
| Scrape Abrasion Resistance | AAR S 501 | 1000 cycles minimum<br>(90°, 0.01 inch radial edge blade, 6N load, 20°C [68°F]) |
| Dynamic Cut Through | ASTM D3032 | 20 lbs. minimum<br>(90°, 0.01 inch radial edge blade, 0.2 inch per min, 20°C [68°F]) |
| Static Cut-through Penetration | AAR S 501 | No contact with the conductor<br>(90°, 0.01 inch radial edge blade, 10 min, 9N load, 125°C [257°F]) |
| **Thermal Properties** | | |
| Temperature Index | ASTM D3032 | 10,000 hours minimum at 125°C [257°F] |
| Accelerated ageing | ASTM D3032 | No cracks, flow or dielectric breakdown. (168hr at 170°C [338°F]) |
| Shrinkage | IEC 811-1-3 | 0.5% maximum at each end. (6hr at 160°C [320°F) |
| Insulation Blocking | MIL-W-22759E | Cores must be easily separated without damage<br>(24hr at 125°C [257°F], 6X mandrel.) |
| **Electrical Properties** | | |
| IR Constant | ASTM D3032 | >10000 MΩkft at 20°C [68°F]<br>>100 MΩkft at 60°C [140°F]<br>>10 MΩkft at 90°C [194°F] |
| **Environmental Properties** | | |
| Fluid Immersion | ASTM D3032 | Fluid / NATO code / Temp (°C) / Time (hr)<br>ASTM No.1 Oil / — / 100 / 70<br>IRM 902 Oil / — / 100 / 70<br>IRM 903 Oil / — / 100 / 70<br>70/30 iso-octane/toluene / — / 23 / 24<br>Engine lubricating oil / O-236 / 70 / 24<br>Grease / G-354 / 70 / 24<br>Hydraulic fluid, petroleum base / H-515 / 50 / 24<br>Silicone damping fluid / S-1724 / 70 / 24<br>Automotive brake fluid / H-542 / 23 / 24<br>Fire resistant hydraulic fluid / H-544 / 50 / 24<br>De-icing fluid / S-745 / 23 / 24<br>Methyl Ethyl Ketone / — / 23 / 1<br>5% max swell. No dielectric breakdown. (30mm diameter mandrel) |
| **Fire Hazard Properties** | | |
| Flammability - small scale | IEC 332-1 | Charring confined between 50mm and 540mm from lower edge of top support. (Single vertical wire, 60 s flame) |
| Flammability - large scale | IEC 332-3 | 2.5m maximum burn length.<br>(Five 3.5m long 37-wire bundles, vertical, 20.5 kW flame) |
| Smoke - small scale | ISO 5659-2 | Ds1.5 of 100 max., Ds4 of 150 max.,<br>Dmax of 150 max., VOF4 of 300 max.<br>('NBS' smoke box with cone heater, 1.8m of wire<br>50 kW/m2 heat flux with and without a pilot flame) |
| Smoke - large scale | IEC 1034 | 90% minimum transmittance.<br>(3m cube smoke box. Eight 1m long 7-wire bundles, horizontal.<br>Fire source: 1 litre burning alcohol.) |
| Toxicity | IMO FTPC | Toxicity index < 1 (Test conditions as in smoke - small scale) |
| Halogen Content | IEC 684-2 | Less than 0.2% Cl + Br + I. Less than 0.1% F (Wet chemical analysis) |
| Copper Mirror Corrosion | ASTM D2671 | 5% maximum etched area. (0.4g sample, 200°C [392°F], 16hr.) |
| Acid Gas Detection | IEC 754-2 | pH greater than 4.3 10 µS/mm maximum<br>(1g sample, tube furnace, T > 935°C [1715°F], gases dissolved in water) |

### Ordering Information

| Conductor | | | | Finished Wire Maximum Resistance at 20°C /kft/km | Diameter | | Maximum Weight lbs/kft kg/km | Part No. |
|---|---|---|---|---|---|---|---|---|
| Wire Size AWG | Stranding No x AWG Dia (mm) | Diameter Min. | Diameter Max. | | Min. | Max. | | |
| 24 | 19x36 | 0.550 [0.022] | 0.63 [0.025] | 25.7 [84.32] | 1.09 [0.043] | 1.19 [0.047] | 2.41 [3.59] | 100A0111-24-* |
| 22 | 19x34 | 0.735 [0.029] | 0.79 [0.031] | 15.9 [52.2] | 1.26 [0.050] | 1.33 [0.052] | 3.34 [4.98] | 100A0111-22* |
| 20 | 19x32 | 0.940 [0.037] | 1.01 [0.040] | 9.9 [32.4] | 1.46 [0.057] | 1.54 [0.061] | 4.98 [7.42] | 100A0111-20* |
| 18 | 19x30 | 1.170 [0.046] | 1.26 [0.050] | 6.2 [20.4] | 1.69 [0.067] | 1.79 [0.071] | 7.31 [10.89] | 100A0111-18* |
| 16 | 19x29 | 1.321 [0.052] | 1.37 [0.054] | 4.8 [15.8] | 1.84 [0.072] | 1.94 [0.076] | 9.19 [13.70] | 100A0111-16* |
| 14 | 19x27 | 1.650 [0.065] | 1.79 [0.070] | 3.1 [10.0] | 2.27 [0.089] | 2.39 [0.094] | 14.45 [21.53] | 100A0111-14* |
| 12 | 37x28 | 2.080 [0.082] | 2.24 [0.088] | 2.0 [6.63] | 2.71 [0.107] | 2.86 [0.113] | 21.03 [31.33] | 100A0111-12* |
| 10 | 37x26 | 2.690 [0.106] | 2.83 [0.111] | 1.3 [4.13] | 3.33 [0.131] | 3.51 [0.138] | 33.27 [49.58] | 100A0111-10* |



Catalog 1654025
Revised 3-13

www.te.com

Dimensions are shown for reference purposes only. Specifications subject to change.

Dimensions are in millimeters unless otherwise specified.

USA: +1 800 522 6752
Asia Pacific: +86 0 400 820 6015
UK: +44 800 267 666

For additional support numbers please visit www.te.com

## Zerohal 100A (Continued)

### Environmental Properties

#### Fluid Resistance

Zerohal 100A wire demonstrates an outstanding balance of resistance to a wide range of commonly used solvents, fluids and lubricants.

#### Voltage Rating

Zerohal 100A wire is a 600 volt rated wire.

### Fire Hazard Characteristics

Zerohal 100A wire is a halogen free insulation system and does not contain phosphorus or sulphur. It meets the toxicity, smoke density, halogen content, corrosivity and flammability requirements of major recognized agencies.

### Flammability

Zerohal 100A wire meets the flammability/burning behavior requirements of major recognized agencies.

### Fire Hazard Properties

| Test | Method | Typical Value |
|---|---|---|
| Flammability - small scale | IEC 332-1 | Charring confined between 50mm and 540mm from lower edge of top support. (Single vertical wire, 60 s flame) |
| Flammability - large scale | IEC 332-3 | 2.5m maximum burn length. (Five 3.5m long 37-wire bundles, vertical, 20.5 kW flame) |
| Flammability | IEEE 383 | Pass |
| Smoke - small scale | ISO 5659-2 | Ds1.5 of 100 max., Ds4 of 150 max., Dmax of 150 max., VOF4 of 300 max. ('NBS' smoke box with cone heater, 1.8m of wire 50 kW/m2 heat flux with and without a pilot flame) |
| Smoke - small scale | ASTM E662 | Smoke density - Ds4 (Max.) Flaming - 200 Non-Flaming - 75 |
| Toxicity | IMO FTPC | Toxicity index < 1 (Test conditions as in smoke - small scale) |
| Halogen Content | IEC 684-2 | Less than 0.2% Cl + Br + I. Less than 0.1% F (Wet chemical analysis) |
| Copper Mirror Corrosion | ASTM D2671 | 5% maximum etched area. (0.4g sample, 200°C [392°F], 16hr.) |
| Acid Gas Detection | IEC 754-2 | pH greater than 4.3 10 µS/mm maximum (1g sample, tube furnace, T > 935°C [715°F], gases dissolved in water) |

### Part Numbering System

**100 A X X X X- Size- X/X - X**

**Jacket Color**
0 - Black
2 - Red

**Primary Wire Insulation Color**
0 - Black
1 - Brown
2 - Red
3 - Orange
4 - Yellow
5 - Green
6 - Blue
7 - Violet
8 - Gray
9 - White

**Conductor Size**

**Conductor Type**
1 - Tin-plated copper

**Number of Conductors**
1 to 9

**Class of Wire**
1 - 600 V equipment wire

**Construction**
0 - Primary wire and unscreened, unjacketed cables
1 - Roundbraid, screened and jacketed
4 - Jacketed, no screen

**Wire Type**
A - AWG construction (US Specification)

**Basic Specification Number**

**Part Numbering System is a cross reference only and not meant for part creation.**





Catalog 1654025
Revised 3-13

www.te.com

Dimensions are shown for reference purposes only. Specifications subject to change.

Dimensions are in millimeters unless otherwise specified.

USA: +1 800 522 6752
Asia Pacific: +86 0 400 820 6015
UK: +44 800 267 666

For additional support numbers please visit www.te.com

## Zerohal 100G

### Product Facts

- Meets requirements of VG 95218-20 Type E
- Halogen free, low smoke
- Highly flame retardant
- Flexible, easy to install
- Small size, lightweight (thin wall construction)

### Applications

Zerohal 100G wire was originally developed to meet the requirements of German Specification VG 95218-20, Type E primary wire.

The construction is a dual wall combination of TE formulated polymer blends developed to meet the specification requirements while maintaining the desirable features of small size, lightweight, flexibility, non-wrinkling, ease of stripping, compatibility with standard stripping equipment, lack of recoil and mechanical robustness.

### System

- System 100

### Physical Characteristics

#### Handleability

Zerohal 100G wire has been designed for minimum recoil during harnessing operations, to be readily handleable by modern wiring and harnessing techniques and to be easily stripped with standard equipment and tools.

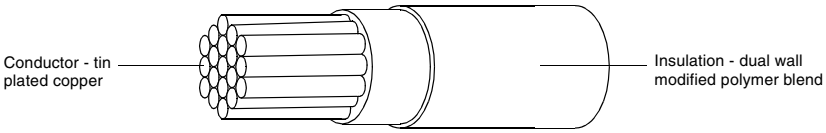


| Available in: | Americas | Europe | Asia Pacific |
|---|---|---|---|
| | ■ | ■ | ■ |



Catalog 1654025
Revised 3-13

www.te.com

Dimensions are shown for reference purposes only. Specifications subject to change.

Dimensions are in millimeters unless otherwise specified.

USA: +1 800 522 6752
Asia Pacific: +86 0 400 820 6015
UK: +44 800 267 666

For additional support numbers please visit www.te.com

## Zerohal 100G (Continued)

### Approvals

TE Specification WSD912 (Electrical cables and insulated wires for signals and power.
- Part 20: Single core insulated wires.)

### Typical Properties

| Test | Method | Typical Value |
|---|---|---|
| Max. operating temperature | VG 95218-20, ASTM D 3032 | 125°C [257°F] (20,000 h) |
| Insulation shrinkage (150°C) | DIN VDE 0472 Pt 628, IEC 811-1-3 | < 0.5% |
| Low temperature bend | VG 95218 - Pt 2 | -55°C [-67 °F] |
| Pressure test at high temperature | DIN VDE 0472 Pt 609, IEC 811-3-1 | 125°C [257°F] < 30% indentation |
| Heat aging (150°C, 6 h) | DIN VDE 0472 Pt 303, | No cracking, no dielectric |
| (140°C, 120 h) | IEC 811-1-2 | breakdown |
| Voltage rating | VG 95218-20 | 750/1300 V AC |
| Abrasion resistance | VG 95218 - Pt 2 | Pass |
| Insulation blocking (125°C) | VG 95218 - Pt 2 | Pass |
| Voltage withstand | DIN VDE 0472 pt 509 | Pass |
| (23°C, 2.5 kV rms) | | |
| Insulation resistance | DIN VDE 0472 pt 502, IEC 885-1 | > 500 M ohms. km (20°C [68°F])<br>> 0.5 M ohms. km (90°C [194°F]) |
| **Chemical resistance** | | |
| Grease (G-354)* | VG 95218 - Pt 2, 70°C 24h | < 5% diameter change, no dielectric breakdown |
| Hydraulic fluid (H-515, H-544)* | VG 95218 - Pt 2, 50°C 24h | < 5% diameter change, no dielectric breakdown |
| Brake fluid (H-542)* | VG 95218 - Pt 2, 23°C 24h | < 5% diameter change, no dielectric breakdown |
| De-icing fluid (S-745)* | VG 95218 - Pt 2, 23°C 24h | < 5% diameter change, no dielectric breakdown |
| MEK | VG 95218 - Pt 2, 23°C 1h | < 5% diameter change, no dielectric breakdown |
| 70/30 ISO-Octane/ Toluene | VG 95218 - Pt 2, 23°C 24h | < 5% diameter change, no dielectric breakdown |
| **Insulation** | | |
| Tensile strength | DIN VDE 0472 pt 602, IEC 811-1-1 | > 20 MPa |
| Elongation at break | DIN VDE 0472 pt 602, IEC 811-1-1 | > 200% |

*NATO code. For further details please consult the German Standard VG 95218-20, Type E.

### Part Numbering System

**100 G X X X X- Size- X**

**Primary Wire Insulation Color**

| | | |
|---|---|---|
| 0 - Black | 3 - Orange | 7 - Violet |
| 1 - Brown | 4 - Yellow | 8 - Gray |
| 2 - Red | 5 - Green | 9 - White |
| 2L - Pink | 6 - Blue | |

**Conductor Size**

**Conductor Type**
1 - Tin-plated copper

**Number of Conductors**
1

**Class of Wire**
1 - 750 V equipment wire

**Construction**
0 - Primary wire

**Wire Type**
G - Meeting the performance requirements of German Specification VG 95218-20, Type E

**Basic Specification Number**

**Part Numbering System is a cross reference only and not meant for part creation.**







Dimensions are shown for reference purposes only. Specifications subject to change.

Dimensions are in millimeters unless otherwise specified.

USA: +1 800 522 6752
Asia Pacific: +86 0 400 820 6015
UK: +44 800 267 666

For additional support numbers please visit www.te.com

## Zerohal 100G (Continued)

### Environmental Properties

#### Fluid Resistance

Zerohal 100G wire demonstrates an outstanding balance of resistance to a wide range of commonly used solvents, fluids and lubricants.

#### Voltage Rating

Zerohal 100G wire is a 750/1300 V AC rated wire.

### Fire Hazard Characteristics

Zerohal 100G wire is a halogen free insulation system and does not contain phosphorus or sulphur. It meets the toxicity, smoke density, halogen content, corrosivity and flammability requirements of VG 95218-20, Type E.

### Flammability

Zerohal 100G wire meets the flammability/burning behavior requirements of VG 95218-20, Type E.

### Fire Hazard Properties

| Test | Method | Typical value |
|---|---|---|
| Toxicity | Def. Standard 02-713 | 3.5 |
| Smoke density | IEC 1034 Pt 1 and 2 | 95% light transmittance |
| Halogen content | DIN VDE 0472 pt 815 | Non-detected |
| Corrosivity of combustion gases | DIN VDE 0472 pt 813, IEC 754-2 | 5.0 pH, <4 µS/mm conductivity |
| Flammability | VG 95218 Pt 2 | < 15 sec afterburn<br>< 150 mm burn length |

### Ordering Information

| Part Description | Nominal Cross Sectional Area mm² | Nominal Conductor Stranding No./Dia (mm) | Equivalent AWG Size | Conductor Diameter (mm) | | Minimum Insulation Thickness (mm) | Maximum Resistance @ 20° C (ohsm/km) | Diameter (mm) | | | Maximum Weight (kg/km) |
|---|---|---|---|---|---|---|---|---|---|---|---|
| | | | | Min. | Max. | | | Lower Spec Limit | Target | Upper Spec Limit | |
| 100G0111-0.15-* | 0.15 | 19/0.10 | 26 | 0.45 | 0.50 | 0.20 | 133.0 | 0.98 | 1.03 | 1.08 | 2.59 |
| 100G0111-0.25-* | 0.25 | 19/0.13 | 24 | 0.55 | 0.63 | 0.20 | 83.30 | 1.09 | 1.14 | 1.19 | 3.59 |
| 100G0111-0.40-* | 0.40 | 19/0.16 | 22 | 0.73 | 0.79 | 0.20 | 50.50 | 1.28 | 1.33 | 1.38 | 5.18 |
| 100G0111-0.50-* | 0.50 | 19/0.18 | — | 0.82 | 0.90 | 0.20 | 40.10 | 1.37 | 1.40 | 1.45 | 6.60 |
| 100G0111-0.60-* | 0.60 | 19/0.20 | 20 | 0.95 | 1.01 | 0.20 | 31.10 | 1.47 | 1.52 | 1.57 | 7.40 |
| 100G0111-0.75-* | 0.75 | 19/0.23 | — | 1.04 | 1.15 | 0.20 | 24.70 | 1.59 | 1.60 | 1.65 | 8.90 |
| 100G0111-1.00-* | 1.00 | 19/0.25 | 18 | 1.17 | 1.26 | 0.20 | 20.00 | 1.69 | 1.75 | 1.80 | 10.7 |
| 100G0111-1.20-* | 1.20 | 19/0.29 | 16 | 1.32 | 1.42 | 0.20 | 15.30 | 1.88 | 1.93 | 1.98 | 13.6 |
| 100G0111-1.50-* | 1.50 | 37/0.23 | 15 | 1.46 | 1.58 | 0.20 | 12.90 | 2.03 | 2.08 | 2.13 | 16.0 |
| 100G0111-2.00-* | 2.00 | 37/0.25 | 14 | 1.68 | 1.82 | 0.20 | 9.80 | 2.31 | 2.36 | 2.41 | 20.3 |
| 100G0111-2.50-* | 2.50 | 37/0.29 | 13 | 1.85 | 2.01 | 0.25 | 8.01 | 2.50 | 2.55 | 2.63 | 25.7 |
| 100G0111-3.00-* | 3.00 | 37/0.32 | 12 | 2.12 | 2.24 | 0.25 | 6.40 | 2.70 | 2.78 | 2.86 | 31.0 |
| 100G0111-4.00-* | 4.00 | 56/0.30 | — | 2.41 | 2.57 | 0.25 | 4.89 | 3.01 | 3.09 | 3.17 | 43.6 |



Dimensions are shown for reference purposes only. Specifications subject to change.

Dimensions are in millimeters unless otherwise specified.

USA: +1 800 522 6752
Asia Pacific: +86 0 400 820 6015
UK: +44 800 267 666

For additional support numbers please visit www.te.com

## C-Lite Low Fire Hazard Lightweight Cables

### Product Facts

- **30% lighter than standard commercial cable for weight savings reductions**
- **Reduced diameter means that smaller bend radius can be used during installation**
- **Reduced and easier cable pulling time**

### Applications

TE materials technology and expertise in processing allows the use of thinwall insulation systems. The use of Zerohal-EN cross-linked cable jacket completes this product offering.

C-Lite cable products can offer significant size and weight reduction, when compared to conventional insulation systems, while at the same time meeting key criteria such as low fire hazard performance and mechanical robustness.

### Crosslinked Molecular Chain

TE Raychem was the first company to commercialize radiation cross-linking of insulation, initially for aero-space applications.

To achieve crosslinking a polymer product is exposed to high-energy radiation. This is generally done by exposure to beta radiation (high-energy electrons) using an electron beam.

Crosslinked insulations in wire and cable products are lightweight, mechanically tough and thermally stable.

**Radiation Crosslinking**

**Molecular Chain**

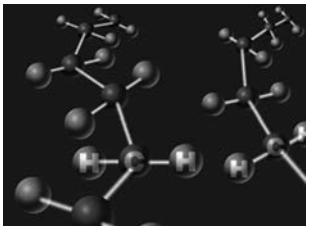

**Crosslinking**

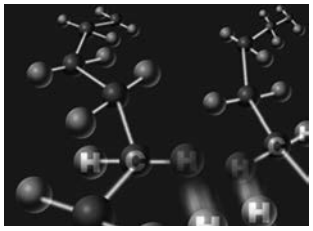

**Crosslinked Molecular Chain**

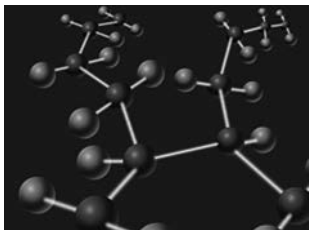

| Available in: | |
|---|---|
| Americas | ■ |
| Europe | ■ |
| Asia Pacific | ■ |





Catalog 1654025
Revised 3-13

www.te.com

Dimensions are shown for reference purposes only. Specifications subject to change.

Dimensions are in millimeters unless otherwise specified.

USA: +1 800 522 6752
Asia Pacific: +86 0 400 820 6015
UK: +44 800 267 666

For additional support numbers please visit www.te.com

## C-Lite CL105-SU

### Multicore Unscreened Cables

The new C-Lite cable range is constructed from flame retarded halogen free primary wire and crosslinked sheath materials.

Offering size and weight savings over traditional cables. The new C-Lite cable range is suitable for use in general power, lighting, communication, control and instrumentation applications.

### Field of application

**Instrumentation and communication control**
**General power and lighting**

### Voltage class

**0.6/1kV**

### Temperature class

**90°C**

### Flame retarded

**IEC 60332-1,-3**

### Cable jacket

**Zerohal**

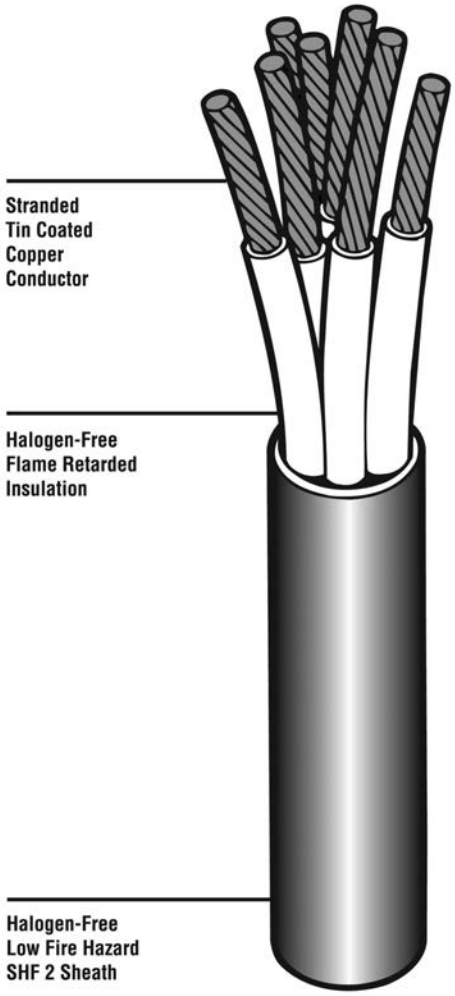


### Core Identification

Standard 2 Core

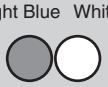


Others

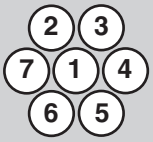


Additional cores numbered sequentially

Color Coded 2G

3G

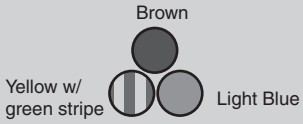


5G

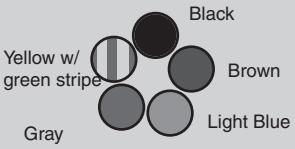


**Approvals**

DNV, LR, GL, ABS, KR, CCS, RMRS, NK, BV

**Pending**

RINA



Catalog 1654025
Revised 3-13

www.te.com

Dimensions are shown for reference purposes only. Specifications subject to change.

Dimensions are in millimeters unless otherwise specified.

USA: +1 800 522 6752
Asia Pacific: +86 0 400 820 6015
UK: +44 800 267 666

For additional support numbers please visit www.te.com

## C-Lite CL105-SU (Continued)

| Ordering Description | OD Under jacket (mm) | Nom Wall (mm) | Nom OD (mm) | Tolerance (mm) | Nom weight (kg/km) |
|---|---|---|---|---|---|
| **STANDARD** | | | | | |
| CL105-2x0.5 - SU | 2.9 | 0.9 | 4.7 | 0.3 | 33 |
| CL105-3x0.5 - SU | 3.1 | 0.9 | 4.9 | 0.3 | 39 |
| CL105-4x0.5 - SU | 3.5 | 0.9 | 5.3 | 0.3 | 48 |
| CL105-5x0.5 - SU | 3.9 | 1.0 | 5.9 | 0.4 | 59 |
| CL105-7x0.5 - SU | 4.3 | 1.0 | 6.3 | 0.4 | 75 |
| CL105-12x0.5 - SU | 5.9 | 1.0 | 7.9 | 0.5 | 117 |
| CL105-19x0.5 - SU | 7.1 | 1.1 | 9.3 | 0.6 | 176 |
| CL105-27x0.5 - SU | 8.7 | 1.1 | 10.9 | 0.7 | 239 |
| CL105-2x0.75 - SU | 3.3 | 0.9 | 5.1 | 0.3 | 40 |
| CL105-3x0.75 - SU | 3.6 | 0.9 | 5.4 | 0.4 | 48 |
| CL105-4x0.75 - SU | 4 | 1.0 | 6.0 | 0.4 | 62 |
| CL105-5x0.75 - SU | 4.4 | 1.0 | 6.4 | 0.4 | 75 |
| CL105-7x0.75 - SU | 4.9 | 1.0 | 6.9 | 0.4 | 95 |
| CL105-12x0.75 - SU | 6.8 | 1.1 | 9.0 | 0.6 | 155 |
| CL105-19x0.75 - SU | 8.1 | 1.1 | 10.3 | 0.7 | 226 |
| CL105-27x0.75 - SU | 10 | 1.2 | 12.4 | 0.8 | 316 |
| CL105-2x1.0 - SU | 3.6 | 0.9 | 5.4 | 0.4 | 45 |
| CL105-3x1.0 - SU | 3.9 | 1.0 | 5.9 | 0.4 | 58 |
| CL105-4x1.0 - SU | 4.3 | 1.0 | 6.3 | 0.4 | 72 |
| CL105-5x1.0 - SU | 4.8 | 1.0 | 6.8 | 0.4 | 87 |
| CL105-7x1.0 - SU | 5.4 | 1.0 | 7.4 | 0.5 | 110 |
| CL105-12x1.0 - SU | 7.4 | 1.1 | 9.6 | 0.6 | 180 |
| CL105-19x1.0 - SU | 8.9 | 1.2 | 11.3 | 0.7 | 271 |
| CL105-27x1.0 - SU | 10.9 | 1.2 | 13.3 | 0.9 | 372 |
| CL105-2x1.5 - SU | 4.3 | 1.0 | 6.3 | 0.4 | 64 |
| CL105-3x1.5 - SU | 4.6 | 1.0 | 6.6 | 0.4 | 82 |
| CL105-4x1.5 - SU | 5.1 | 1.0 | 7.1 | 0.5 | 97 |
| CL105-5x1.5 - SU | 5.7 | 1.0 | 7.7 | 0.5 | 119 |
| CL105-7x1.5 - SU | 6.3 | 1.1 | 8.5 | 0.6 | 158 |
| CL105-12x1.5 - SU | 8.8 | 1.2 | 11.2 | 0.7 | 259 |
| CL105-14x1.5 - SU | 9.3 | 1.2 | 11.7 | 0.8 | 295 |
| CL105-19x1.5 - SU | 10.5 | 1.2 | 12.9 | 0.8 | 385 |
| CL105-24x1.5 - SU | 12.6 | 1.3 | 15.2 | 1.0 | 488 |
| CL105-27x1.5 - SU | 12.9 | 1.3 | 15.5 | 1.0 | 540 |
| CL105-37x1.5 - SU | 14.7 | 1.4 | 17.5 | 1.1 | 725 |
| CL105-2x2.5 - SU | 5.2 | 1.0 | 7.2 | 0.5 | 91 |
| CL105-3x2.5 - SU | 5.6 | 1.0 | 7.6 | 0.5 | 118 |
| CL105-4x2.5 - SU | 6.3 | 1.1 | 8.5 | 0.6 | 153 |
| CL105-5x2.5 - SU | 7 | 1.1 | 9.2 | 0.6 | 181 |
| CL105-7x2.5 - SU | 7.8 | 1.1 | 10.0 | 0.7 | 235 |
| CL105-12x2.5 - SU | 10.7 | 1.2 | 13.1 | 0.9 | 391 |
| CL105-19x2.5 - SU | 12.9 | 1.3 | 15.5 | 1.0 | 597 |
| CL105-27x2.5 - SU | 15.8 | 1.4 | 18.6 | 1.2 | 838 |
| CL105-37x2.5 - SU | 18 | 1.5 | 21.0 | 1.4 | 1129 |
| **COLOR CODED** | | | | | |
| CL105-2Gx0.5 - SU | 2.9 | 0.9 | 4.7 | 0.3 | 33 |
| CL105-3Gx0.5 - SU | 3.1 | 0.9 | 4.9 | 0.3 | 39 |
| CL105-5Gx0.5 - SU | 3.9 | 1.0 | 5.9 | 0.4 | 59 |
| CL105-2Gx0.75 - SU | 3.3 | 0.9 | 5.1 | 0.3 | 40 |
| CL105-3Gx0.75 - SU | 3.6 | 0.9 | 5.4 | 0.4 | 48 |
| CL105-5Gx0.75 - SU | 4.4 | 1.0 | 6.4 | 0.4 | 75 |
| CL105-2Gx1.0 - SU | 3.6 | 0.9 | 5.4 | 0.4 | 45 |
| CL105-3Gx1.0 - SU | 3.9 | 1.0 | 5.9 | 0.4 | 58 |
| CL105-5Gx1.0 - SU | 4.8 | 1.0 | 6.8 | 0.4 | 87 |
| CL105-2Gx1.5 - SU | 4.3 | 1.0 | 6.3 | 0.4 | 64 |
| CL105-3Gx1.5 - SU | 4.6 | 1.0 | 6.6 | 0.4 | 82 |
| CL105-5Gx1.5 - SU | 5.7 | 1.0 | 7.7 | 0.5 | 119 |
| CL105-2Gx2.5 - SU | 5.2 | 1.0 | 7.2 | 0.5 | 91 |
| CL105-3Gx2.5 - SU | 5.6 | 1.0 | 7.6 | 0.5 | 118 |
| CL105-5Gx2.5 - SU | 7.0 | 1.1 | 9.2 | 0.6 | 181 |







Dimensions are shown for reference purposes only. Specifications subject to change.

Dimensions are in millimeters unless otherwise specified.

USA: +1 800 522 6752
Asia Pacific: +86 0 400 820 6015
UK: +44 800 267 666

For additional support numbers please visit www.te.com

## C-Lite CL105-SO

### Multicore Overall Screened Cables

The new C-Lite cable range is constructed from flame retarded halogen free primary wire and crosslinked sheath materials.

Offering size and weight savings over traditional cables. The new C-Lite cable range is suitable for use in general power, lighting, communication, control and instrumentation applications.

### Field of application

**Instrumentation and communication control**
**General power and lighting**

### Voltage class

**0.6/1kV**

### Temperature class

**90°C**

### Flame retarded

**IEC 60332-1,-3**

### Cable jacket

**Zerohal**

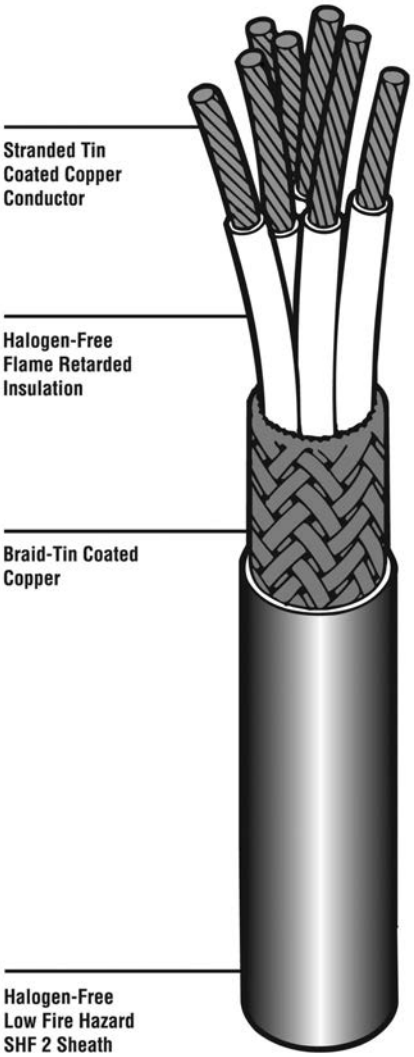


### Core Identification

Standard 2 Core

Others

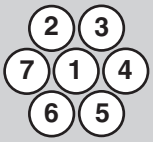


Additional cores numbered sequentially

Color Coded 2G

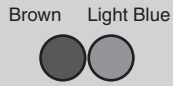


3G

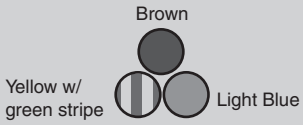


5G

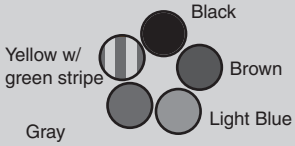


**Approvals**

DNV, LR, GL, ABS, KR, CCS, RMRS, NK, BV

**Pending**

RINA



Catalog 1654025
Revised 3-13

www.te.com

Dimensions are shown for reference purposes only. Specifications subject to change.

Dimensions are in millimeters unless otherwise specified.

USA: +1 800 522 6752
Asia Pacific: +86 0 400 820 6015
UK: +44 800 267 666

For additional support numbers please visit www.te.com

## C-Lite CL105-SO (Continued)

| Ordering Description | OD Under jacket (mm) | Nom Wall (mm) | Nom OD (mm) | Tolerance (mm) | Nom weight (kg/km) |
|---|---|---|---|---|---|
| **STANDARD** | | | | | |
| CL105-2x0.5 - SO | 3.5 | 0.9 | 5.3 | 0.3 | 48 |
| CL105-3x0.5 - SO | 3.7 | 0.9 | 5.5 | 0.4 | 55 |
| CL105-4x0.5 - SO | 4.1 | 1.0 | 6.1 | 0.4 | 68 |
| CL105-5x0.5 - SO | 4.5 | 1.0 | 6.5 | 0.4 | 79 |
| CL105-7x0.5 - SO | 4.9 | 1.0 | 6.9 | 0.4 | 96 |
| CL105-12x0.5- SO | 6.5 | 1.1 | 8.7 | 0.6 | 149 |
| CL105-19x0.5 - SO | 7.7 | 1.1 | 9.9 | 0.6 | 208 |
| CL105-27x0.5 - SO | 9.3 | 1.2 | 11.7 | 0.8 | 284 |
| CL105-2x1.0 - SO | 4.2 | 1.0 | 6.2 | 0.4 | 66 |
| CL105-3x1.0 - SO | 4.5 | 1.0 | 6.5 | 0.4 | 78 |
| CL105-4x1.0 - SO | 4.9 | 1.0 | 6.9 | 0.4 | 93 |
| CL105-5x1.0 - SO | 5.4 | 1.0 | 7.4 | 0.5 | 110 |
| CL105-7x1.0 - SO | 6 | 1.0 | 8 | 0.5 | 135 |
| CL105-12x1.0 - SO | 8 | 1.1 | 10.2 | 0.7 | 214 |
| CL105-19x1.0 - SO | 9.5 | 1.2 | 11.9 | 0.8 | 311 |
| CL105-27x1.0 - SO | 11.5 | 1.3 | 14.1 | 0.9 | 427 |
| CL105-2x1.5 - SO | 4.9 | 1.0 | 6.9 | 0.4 | 85 |
| CL105-3x1.5 - SO | 5.2 | 1.0 | 7.2 | 0.5 | 104 |
| CL105-4x1.5 - SO | 5.7 | 1.0 | 7.7 | 0.5 | 122 |
| CL105-5x1.5 - SO | 6.3 | 1.1 | 8.5 | 0.6 | 150 |
| CL105-7x1.5 - SO | 6.9 | 1.1 | 9.1 | 0.6 | 187 |
| CL105-12x1.5 - SO | 9.4 | 1.2 | 11.8 | 0.8 | 299 |
| CL105-14x1.5 - SO | 9.9 | 1.2 | 12.3 | 0.8 | 337 |
| CL105-19x1.5 - SO | 11.1 | 1.2 | 13.5 | 0.9 | 432 |
| CL105-24x1.5 - SO | 13.3 | 1.3 | 15.9 | 1.0 | 558 |
| CL105-27x1.5 - SO | 13.6 | 1.3 | 16.2 | 1.1 | 611 |
| CL105-37x1.5 - SO | 15.6 | 1.4 | 18.4 | 1.2 | 828 |
| CL105-2x2.5 - SO | 5.8 | 1.0 | 7.8 | 0.5 | 116 |
| CL105-3x2.5 - SO | 6.2 | 1.0 | 8.2 | 0.5 | 145 |
| CL105-4x2.5 - SO | 6.9 | 1.1 | 9.1 | 0.6 | 183 |
| CL105-5x2.5 - SO | 7.6 | 1.1 | 9.8 | 0.6 | 214 |
| CL105-7x2.5 - SO | 8.4 | 1.1 | 10.6 | 0.7 | 271 |
| CL105-12x2.5 - SO | 11.3 | 1.3 | 13.9 | 0.9 | 446 |
| CL105-19x2.5 - SO | 13.6 | 1.3 | 16.2 | 1.1 | 668 |
| CL105-27x2.5 - SO | 16.7 | 1.5 | 19.7 | 1.3 | 958 |
| CL105-37x2.5 - SO | 18.9 | 1.6 | 22.1 | 1.4 | 1264 |
| **COLOR CODED** | | | | | |
| CL105-2Gx0.5 - SO | 3.5 | 0.9 | 5.3 | 0.3 | 48 |
| CL105-3Gx0.5 - SO | 3.7 | 0.9 | 5.5 | 0.4 | 55 |
| CL105-5Gx0.5 - SO | 4.5 | 1.0 | 6.5 | 0.4 | 79 |
| CL105-2Gx1.0 - SO | 4.2 | 1.0 | 6.2 | 0.4 | 66 |
| CL105-3Gx1.0 - SO | 4.5 | 1.0 | 6.5 | 0.4 | 78 |
| CL105-5Gx1.0 - SO | 5.4 | 1.0 | 7.4 | 0.5 | 110 |
| CL105-2Gx1.5 - SO | 4.9 | 1.0 | 6.9 | 0.4 | 85 |
| CL105-3Gx1.5 - SO | 5.2 | 1.0 | 7.2 | 0.5 | 104 |
| CL105-5Gx1.5 - SO | 6.3 | 1.1 | 8.5 | 0.6 | 150 |
| CL105-2Gx2.5 - SO | 5.8 | 1.0 | 7.8 | 0.5 | 116 |
| CL105-3Gx2.5 - SO | 6.2 | 1.0 | 8.2 | 0.5 | 145 |
| CL105-5Gx2.5 - SO | 7.6 | 1.1 | 9.8 | 0.6 | 214 |

Note: For installation guidelines refer to TE installation guidelines document WT1189

## C-Lite CL105-PF/C-Lite CL105-TF

### Multipair and Multitriple Unscreened Cables

The new C-Lite cable range is constructed from flame retarded halogen free primary wire and crosslinked sheath materials.

Offering size and weight savings over traditional cables. The new C-Lite cable range is suitable for use in general power, lighting, communication, control and instrumentation applications.

### Field of application

**Instrumentation and communication control**
**General power and lighting**

### Voltage class

**0.6/1kV**

### Temperature class

**90°C**

### Flame retarded

**IEC 60332-1,-3**

### Cable jacket

**Zerohal**

### Core Identification

Pairs

| | Light Blue | White |
|---|---|---|
| 1 | 1 | 2 |
| 2 | 3 | 4 |
| 3 | 5 | 6 |

Additional pairs numbered sequentially

Triples

| | Red | Light Blue | White |
|---|---|---|---|
| 1 | 1 | 2 | 3 |
| 2 | 4 | 5 | 6 |
| 3 | 7 | 8 | 9 |

Additional triples numbered sequentially

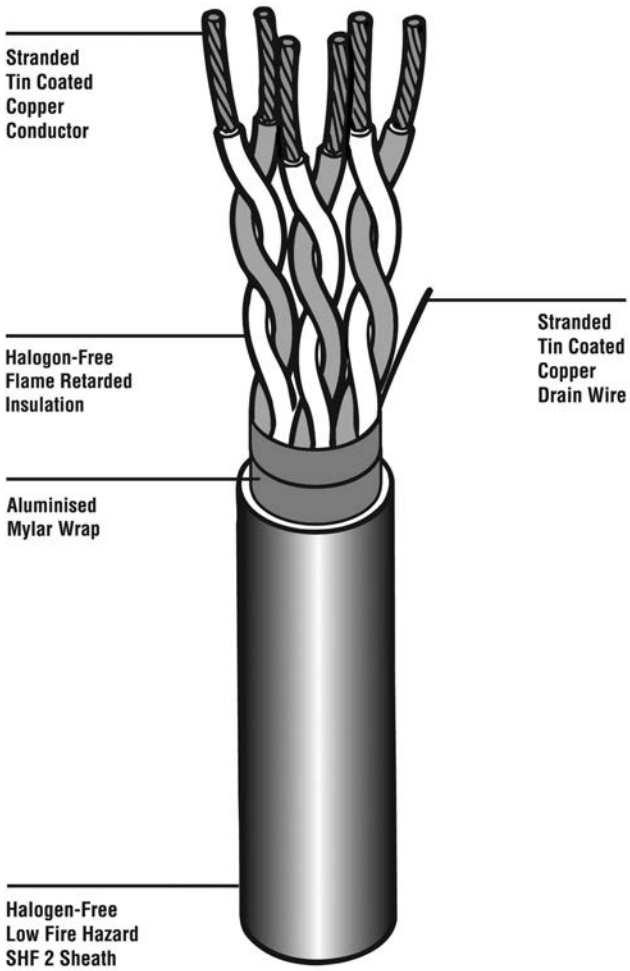


**Approvals**

DNV, LR, GL, ABS, KR, CCS, RMRS, NK, BV

**Pending**

RINA



Catalog 1654025
Revised 3-13

www.te.com

Dimensions are shown for reference purposes only. Specifications subject to change.

Dimensions are in millimeters unless otherwise specified.

USA: +1 800 522 6752
Asia Pacific: +86 0 400 820 6015
UK: +44 800 267 666

For additional support numbers please visit www.te.com

## C-Lite CL105-PF/C-Lite CL105-TF (Continued)

| Ordering Description | OD Under jacket (mm) | Nom Wall (mm) | Nom OD (mm) | Tolerance (mm) | Nom weight (kg/km) |
|---|---|---|---|---|---|
| **PAIRS** | | | | | |
| CL105-2x2x0.5 - PF | 3.7 | 0.9 | 5.5 | 0.4 | 51 |
| CL105-3x2x0.5 - PF | 5.7 | 1.0 | 7.7 | 0.5 | 85 |
| CL105-4x2x0.5 - PF | 6.3 | 1.1 | 8.5 | 0.6 | 106 |
| CL105-7x2x0.5 - PF | 7.8 | 1.1 | 10 | 0.7 | 152 |
| CL105-10x2x0.5 - PF | 9.9 | 1.2 | 12.3 | 0.8 | 210 |
| CL105-14x2x0.5 - PF | 11.5 | 1.3 | 14.1 | 0.9 | 281 |
| CL105-19x2x0.5 - PF | 13.3 | 1.3 | 15.9 | 1.1 | 360 |
| CL105-24x2x0.5 - PF | 14.8 | 1.4 | 17.6 | 1.2 | 446 |
| CL105-37x2x0.5 - PF | 18.1 | 1.5 | 21.1 | 1.4 | 655 |
| CL105-2x2x0.75 - PF | 4.1 | 1.0 | 6.1 | 0.4 | 70 |
| CL105-3x2x0.75 - PF | 6.5 | 1.1 | 8.7 | 0.6 | 112 |
| CL105-4x2x0.75 - PF | 7.2 | 1.1 | 9.4 | 0.6 | 133 |
| CL105-7x2x0.75 - PF | 8.9 | 1.2 | 11.3 | 0.7 | 204 |
| CL105-10x2x0.75 - PF | 11.2 | 1.2 | 13.6 | 0.9 | 271 |
| CL105-14x2x0.75 - PF | 13 | 1.3 | 15.6 | 1.0 | 365 |
| CL105-19x2x0.75 - PF | 15 | 1.4 | 17.8 | 1.2 | 481 |
| CL105-24x2x0.75 - PF | 16.7 | 1.5 | 19.7 | 1.3 | 597 |
| CL105-37x2x0.75 - PF | 20.6 | 1.6 | 23.8 | 1.5 | 881 |
| CL105-2x2x1.0 - PF | 4.4 | 1.0 | 6.4 | 0.4 | 79 |
| CL105-3x2x1.0 - PF | 7.1 | 1.1 | 9.3 | 0.6 | 128 |
| CL105-4x2x1.0 - PF | 7.9 | 1.1 | 10.1 | 0.7 | 154 |
| CL105-7x2x1.0 - PF | 9.8 | 1.2 | 12.2 | 0.8 | 239 |
| CL105-10x2x1.0 - PF | 12.1 | 1.3 | 14.7 | 1.0 | 326 |
| CL105-14x2x1.0 - PF | 14.2 | 1.4 | 17 | 1.1 | 440 |
| CL105-19x2x1.0 - PF | 16.3 | 1.5 | 19.3 | 1.3 | 580 |
| CL105-24x2x1.0 - PF | 18.2 | 1.5 | 21.2 | 1.4 | 709 |
| CL105-37x2x1.0 - PF | 22.4 | 1.7 | 25.8 | 1.7 | 1064 |
| CL105-2x2x1.5 - PF | 5.2 | 1.0 | 7.2 | 0.5 | 105 |
| CL105-3x2x1.5 - PF | 8.4 | 1.1 | 10.6 | 0.7 | 181 |
| CL105-4x2x1.5 - PF | 9.3 | 1.2 | 11.7 | 0.8 | 218 |
| CL105-7x2x1.5 - PF | 11.6 | 1.3 | 14.2 | 0.9 | 332 |
| CL105-10x2x1.5 - PF | 14.2 | 1.4 | 17 | 1.1 | 452 |
| CL105-14x2x1.5 - PF | 16.6 | 1.5 | 19.6 | 1.3 | 613 |
| CL105-19x2x1.5 - PF | 19.2 | 1.6 | 22.4 | 1.5 | 810 |
| CL105-24x2x1.5 - PF | 21.4 | 1.7 | 24.8 | 1.6 | 1006 |
| CL105-37x2x1.5 - PF | 26.4 | 1.9 | 30.2 | 2.0 | 1511 |
| **TRIPLES** | | | | | |
| CL105-2x3x0.75 - TF | 7.1 | 1.1 | 9.3 | 0.6 | 126 |
| CL105-4x3x0.75 - TF | 8.5 | 1.1 | 10.7 | 0.7 | 182 |
| CL105-7x3x0.75 - TF | 10.5 | 1.2 | 12.9 | 0.8 | 283 |
| CL105-10x3x0.75 - TF | 15 | 1.4 | 17.8 | 1.2 | 412 |
| CL105-15x3x0.75 - TF | 17.5 | 1.5 | 20.5 | 1.3 | 601 |
| CL105-2x3x1.5 - TF | 9.1 | 1.2 | 11.5 | 0.7 | 191 |
| CL105-4x3x1.5 - TF | 10.9 | 1.2 | 13.3 | 0.9 | 290 |
| CL105-7x3x1.5 - TF | 13.5 | 1.3 | 16.1 | 1.0 | 453 |

Note: For installation guidelines refer to TE installation guidelines document WT1189

## C-Lite CL105/PI/C-Lite CL105-TI

### Multipair and Multitriple Individually Screened Cables

The new C-Lite cable range is constructed from flame retarded halogen free primary wire and crosslinked sheath materials.

Offering size and weight savings over traditional cables. The new C-Lite cable range is suitable for use in general power, lighting, communication, control and instrumentation applications.

### Field of application

**Instrumentation and communication control**
**General power and lighting**

### Voltage class

**0.6/1kV**

### Temperature class

**90°C**

### Flame retarded

**IEC 60332-1,-3**

### Cable jacket

**Zerohal**

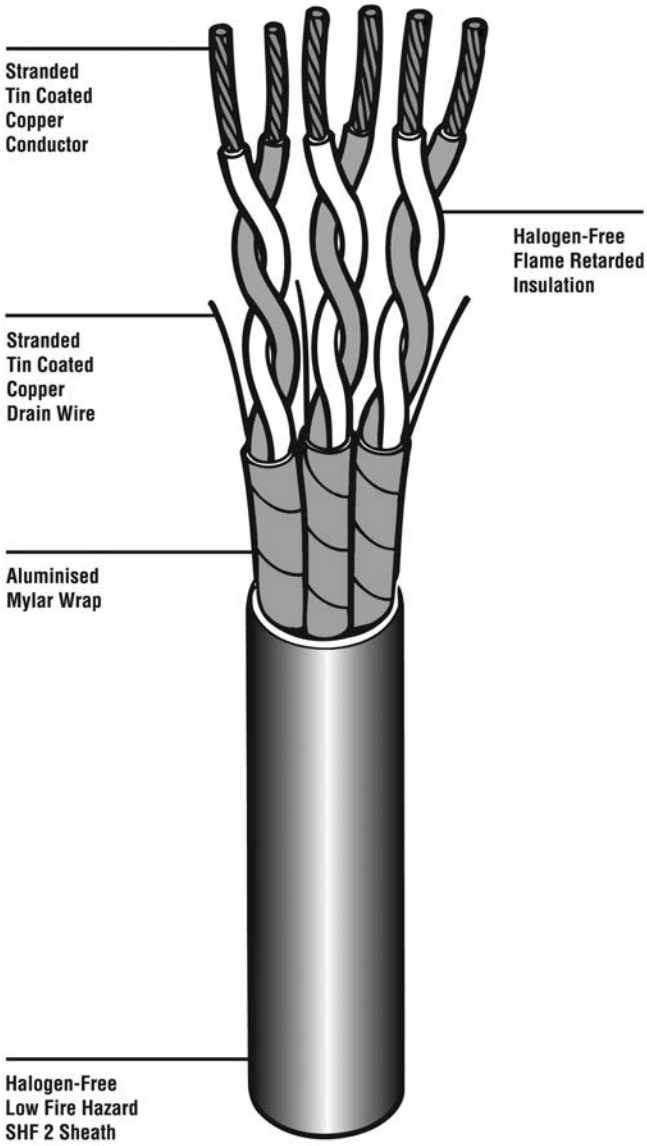


### Core Identification

| Pairs | Light Blue | White |
|---|---|---|
| 1 | 1 | 2 |
| 2 | 3 | 4 |
| 3 | 5 | 6 |

Additional pairs numbered sequentially

| Triples | Red | Light Blue | White |
|---|---|---|---|
| 1 | 1 | 2 | 3 |
| 2 | 4 | 5 | 6 |
| 3 | 7 | 8 | 9 |

Additional triples numbered sequentially

**Approvals**

DNV, LR, GL, ABS, KR, CCS, RMRS, NK, BV

**Pending**

RINA



Catalog 1654025
Revised 3-13

www.te.com

Dimensions are shown for reference purposes only. Specifications subject to change.

Dimensions are in millimeters unless otherwise specified.

USA: +1 800 522 6752
Asia Pacific: +86 0 400 820 6015
UK: +44 800 267 666

For additional support numbers please visit www.te.com

## C-Lite CL105/PI/C-Lite CL105-TI (Continued)

| Ordering Description | OD Under jacket (mm) | Nom Wall (mm) | Nom OD (mm) | Tolerance (mm) | Nom weight (kg/km) |
|---|---|---|---|---|---|
| **PAIRS** | | | | | |
| CL105-1x2x0.5 - PI | 3.2 | 0.9 | 5 | 0.3 | 41 |
| CL105-2x2x0.5 - PI | 6.1 | 1.0 | 8.1 | 0.5 | 87 |
| CL105-3x2x0.5 - PI | 6.3 | 1.1 | 8.5 | 0.6 | 103 |
| CL105-4x2x0.5 - PI | 7 | 1.1 | 9.2 | 0.6 | 126 |
| CL105-7x2x0.5 - PI | 8.7 | 1.1 | 10.9 | 0.7 | 185 |
| CL105-10x2x0.5 - PI | 10.1 | 1.2 | 12.5 | 0.8 | 255 |
| CL105-14x2x0.5 - PI | 11.9 | 1.3 | 14.5 | 0.9 | 347 |
| CL105-19x2x0.5 - PI | 13.8 | 1.4 | 16.6 | 1.1 | 462 |
| CL105-24x2x0.5 - PI | 15.5 | 1.4 | 18.3 | 1.2 | 566 |
| CL105-37x2x0.5 - PI | 19.2 | 1.6 | 22.4 | 1.5 | 856 |
| CL105-1x2x0.75 - PI | 3.4 | 0.9 | 5.2 | 0.3 | 46 |
| CL105-2x2x0.75 - PI | 6.9 | 1.1 | 9.1 | 0.6 | 112 |
| CL105-3x2x0.75 - PI | 7.1 | 1.1 | 9.3 | 0.6 | 132 |
| CL105-4x2x0.75 - PI | 7.9 | 1.1 | 10.1 | 0.7 | 164 |
| CL105-7x2x0.75 - PI | 9.9 | 1.2 | 12.3 | 0.8 | 250 |
| CL105-10x2x0.75 - PI | 11.4 | 1.3 | 14 | 0.9 | 344 |
| CL105-14x2x0.75 - PI | 13.4 | 1.3 | 16 | 1.0 | 462 |
| CL105-19x2x0.75 - PI | 15.7 | 1.4 | 18.5 | 1.2 | 616 |
| CL105-24x2x0.75 - PI | 17.5 | 1.5 | 20.5 | 1.3 | 769 |
| CL105-37x2x0.75 - PI | 21.8 | 1.7 | 25.2 | 1.6 | 1164 |
| CL105-1x2x1.0 - PI | 3.7 | 0.9 | 5.5 | 0.4 | 55 |
| CL105-2x2x1.0 - PI | 7.5 | 1.1 | 9.7 | 0.6 | 133 |
| CL105-3x2x1.0 - PI | 7.7 | 1.1 | 9.9 | 0.6 | 159 |
| CL105-4x2x1.0 - PI | 8.6 | 1.1 | 10.8 | 0.7 | 198 |
| CL105-7x2x1.0 - PI | 10.7 | 1.2 | 13.1 | 0.9 | 306 |
| CL105-10x2x1.0 - PI | 12.4 | 1.3 | 15 | 1.0 | 423 |
| CL105-14x2x1.0 - PI | 14.6 | 1.4 | 17.4 | 1.1 | 579 |
| CL105-19x2x1.0 - PI | 17.1 | 1.5 | 20.1 | 1.3 | 773 |
| CL105-24x2x1.0 - PI | 19.1 | 1.6 | 22.3 | 1.4 | 965 |
| CL105-37x2x1.0 - PI | 23.7 | 1.7 | 27.1 | 1.8 | 1448 |
| CL105-1x2x1.5 - PI | 4.4 | 1.0 | 6.4 | 0.4 | 73 |
| CL105-2x2x1.5 - PI | 8.8 | 1.2 | 11.2 | 0.7 | 179 |
| CL105-3x2x1.5 - PI | 9.1 | 1.2 | 11.5 | 0.7 | 211 |
| CL105-4x2x1.5 - PI | 10.1 | 1.2 | 12.5 | 0.8 | 265 |
| CL105-7x2x1.5 - PI | 12.6 | 1.3 | 15.2 | 1.0 | 406 |
| CL105-10x2x1.5 - PI | 14.6 | 1.4 | 17.4 | 1.1 | 562 |
| CL105-14x2x1.5 - PI | 17.2 | 1.5 | 20.2 | 1.3 | 769 |
| CL105-19x2x1.5 - PI | 20.1 | 1.6 | 23.3 | 1.5 | 1027 |
| CL105-24x2x1.5 - PI | 22.5 | 1.7 | 25.9 | 1.7 | 1283 |
| CL105-37x2x1.5 - PI | 27.9 | 1.9 | 31.7 | 2.1 | 1943 |
| **TRIPLES** | | | | | |
| CL105-1x3.0.75 - TI | 3.7 | 0.9 | 5.5 | 0.4 | 54 |
| CL105-2x3x0.75 - TI | 7.4 | 1.1 | 9.6 | 0.6 | 132 |
| CL105-4x3x0.75 - TI | 8.9 | 1.2 | 11.3 | 0.7 | 209 |
| CL105-7x3x0.75 - TI | 11.1 | 1.2 | 13.5 | 0.9 | 309 |
| CL105-10x3x0.75- TI | 14.7 | 1.4 | 17.5 | 1.1 | 449 |
| CL105-15x3x0.75 - TI | 17.3 | 1.5 | 20.3 | 1.3 | 664 |
| CL105-1x3x1.5 - TI | 4.7 | 1.0 | 6.7 | 0.4 | 88 |
| CL105-2x3x1.5 - TI | 9.5 | 1.2 | 11.9 | 0.8 | 213 |
| CL105-4x3x1.5 - TI | 11.4 | 1.3 | 14 | 0.9 | 337 |
| CL105-7x3x1.5 - TI | 14.2 | 1.4 | 17 | 1.1 | 521 |

Note: For installation guidelines refer to TE installation guidelines document WT1189

## C-Lite CL105/PO/C-Lite CL105-TO

### Multipair and Multitriple Overall Screened Cables

The new C-Lite cable range is constructed from flame retarded halogen free primary wire and crosslinked sheath materials.

Offering size and weight savings over traditional cables. The new C-Lite cable range is suitable for use in general power, lighting, communication, control and instrumentation applications.

**Field of application**

**Instrumentation and communication control**
**General power and lighting**

**Voltage class**

**0.6/1kV**

**Temperature class**

**90°C**

**Flame retarded**

**IEC 60332-1,-3**

**Cable jacket**

**Zerohal**

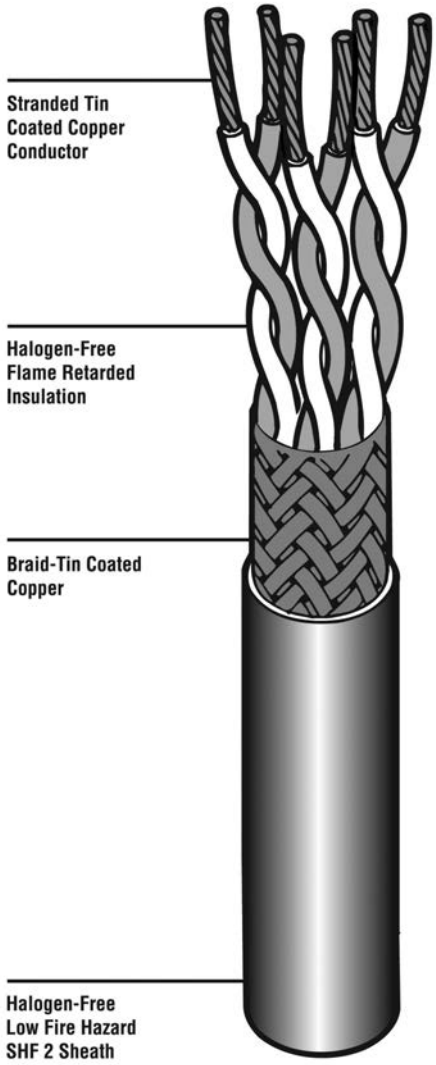


### Core Identification

Pairs

| | Light Blue | White |
|---|---|---|
| 1 | 1 | 2 |
| 2 | 3 | 4 |
| 3 | 5 | 6 |

Additional pairs numbered sequentially

Triples

| | Red | Light Blue | White |
|---|---|---|---|
| 1 | 1 | 2 | 3 |
| 2 | 4 | 5 | 6 |
| 3 | 7 | 8 | 9 |

Additional triples numbered sequentially

**Approvals**

DNV, LR, GL, ABS, KR, CCS, RMRS, NK, BV

**Pending**

RINA



Catalog 1654025
Revised 3-13

www.te.com

Dimensions are shown for reference purposes only. Specifications subject to change.

Dimensions are in millimeters unless otherwise specified.

USA: +1 800 522 6752
Asia Pacific: +86 0 400 820 6015
UK: +44 800 267 666

For additional support numbers please visit www.te.com

## C-Lite CL105/PO/C-Lite CL105-TO (Continued)

| Ordering Description | OD Under jacket (mm) | Nom Wall (mm) | Nom OD (mm) | Tolerance (mm) | Nom weight (kg/km) |
|---|---|---|---|---|---|
| **PAIRS** | | | | | |
| CL105-1x2x0.5 - PO | 3.5 | 0.9 | 5.3 | 0.3 | 48 |
| CL105-2x2x0.5 - PO | 4.1 | 1.0 | 6.1 | 0.4 | 68 |
| CL105-3x2x0.5 - PO | 6.2 | 1.1 | 8.4 | 0.6 | 109 |
| CL105-4x2x0.5 - PO | 6.9 | 1.1 | 9.1 | 0.6 | 130 |
| CL105-7x2x0.5 - PO | 8.3 | 1.1 | 10.5 | 0.7 | 178 |
| CL105-10x2x0.5 - PO | 9.6 | 1.2 | 12 | 0.8 | 236 |
| CL105-14x2x0.5 - PO | 11.2 | 1.3 | 13.8 | 0.9 | 312 |
| CL105-19x2x0.5 - PO | 13 | 1.3 | 15.6 | 1.0 | 412 |
| CL105-24x2x0.5 - PO | 14.5 | 1.4 | 17.3 | 1.2 | 504 |
| CL105-37x2x0.5 - PO | 18.1 | 1.5 | 21.1 | 1.4 | 754 |
| CL105-1x2x0.75 - PO | 3.9 | 1.0 | 5.9 | 0.4 | 60 |
| CL105-2x2x0.75 - PO | 4.6 | 1.0 | 6.6 | 0.4 | 82 |
| CL105-3x2x0.75 - PO | 7 | 1.1 | 9.2 | 0.6 | 134 |
| CL105-4x2x0.75 - PO | 7.7 | 1.1 | 9.9 | 0.6 | 162 |
| CL105-7x2x0.75 - PO | 9.4 | 1.2 | 11.8 | 0.8 | 232 |
| CL105-10x2x0.75 - PO | 10.8 | 1.2 | 13.2 | 0.9 | 301 |
| CL105-14x2x0.75 - PO | 12.8 | 1.3 | 15.4 | 1.0 | 416 |
| CL105-19x2x0.75 - PO | 14.8 | 1.4 | 17.6 | 1.1 | 541 |
| CL105-24x2x0.75 - PO | 16.7 | 1.5 | 19.7 | 1.3 | 688 |
| CL105-37x2x0.75 - PO | 20.7 | 1.6 | 23.9 | 1.6 | 1029 |
| CL105-1x2x1.0 - PO | 4.2 | 1.0 | 6.2 | 0.4 | 66 |
| CL105-2x2x1.0 - PO | 4.9 | 1.0 | 6.9 | 0.4 | 93 |
| CL105-3x2x1.0 - PO | 7.6 | 1.1 | 9.8 | 0.6 | 154 |
| CL105-4x2x1.0 - PO | 8.4 | 1.1 | 10.6 | 0.7 | 186 |
| CL105-7x2x1.0 - PO | 10.3 | 1.2 | 12.7 | 0.8 | 269 |
| CL105-10x2x1.0 - PO | 11.8 | 1.3 | 14.4 | 0.9 | 360 |
| CL105-14x2x1.0 - PO | 13.9 | 1.4 | 16.7 | 1.1 | 496 |
| CL105-19x2x1.0 - PO | 16.3 | 1.5 | 19.3 | 1.3 | 669 |
| CL105-24x2x1.0 - PO | 18.2 | 1.5 | 21.2 | 1.4 | 809 |
| CL105-37x2x1.0 - PO | 22.5 | 1.7 | 25.9 | 1.7 | 1226 |
| CL105-1x2x1.5 - PO | 4.9 | 1.0 | 6.9 | 0.4 | 85 |
| CL105-2x2x1.5 - PO | 5.7 | 1.0 | 7.7 | 0.5 | 122 |
| CL105-3x2x1.5 - PO | 8.9 | 1.2 | 11.3 | 0.7 | 206 |
| CL105-4x2x1.5 - PO | 9.9 | 1.2 | 12.3 | 0.8 | 251 |
| CL105-7x2x1.5 - PO | 12.1 | 1.3 | 14.7 | 1.0 | 367 |
| CL105-10x2x1.5 - PO | 14 | 1.4 | 16.8 | 1.1 | 508 |
| CL105-14x2x1.5 - PO | 16.6 | 1.5 | 19.6 | 1.3 | 703 |
| CL105-19x2x1.5 - PO | 19.1 | 1.6 | 22.3 | 1.4 | 915 |
| CL105-24x2x1.5 - PO | 21.6 | 1.7 | 25 | 1.6 | 1161 |
| CL105-37x2x1.5 - PO | 26.5 | 1.9 | 30.3 | 2.0 | 1703 |
| **TRIPLES** | | | | | |
| CL105-1x3x0.75 - TO | 4.2 | 1.0 | 6.2 | 0.4 | 69 |
| CL105-2x3x0.75 - TO | 7.7 | 1.1 | 9.9 | 0.6 | 152 |
| CL105-4x3x0.75 - TO | 9.1 | 1.2 | 11.5 | 0.7 | 223 |
| CL105-7x3x0.75 - TO | 11.2 | 1.2 | 13.6 | 0.9 | 318 |
| CL105-10x3x0.75 - TO | 14.8 | 1.4 | 17.6 | 1.1 | 472 |
| CL105-15x3x0.75 - TO | 17.4 | 1.5 | 20.4 | 1.3 | 697 |
| CL105-1x3x1.5 - TO | 5.2 | 1.0 | 7.2 | 0.5 | 104 |
| CL105-2x3x1.5 - TO | 9.7 | 1.2 | 12.1 | 0.8 | 231 |
| CL105-4x3x1.5 - TO | 11.5 | 1.3 | 14.1 | 0.9 | 342 |
| CL105-7x3x1.5 - TO | 14.3 | 1.4 | 17.1 | 1.1 | 520 |

Note: For installation guidelines refer to TE installation guidelines document WT1189

## C-Lite CL105-PIO/C-Lite CL105-TIO

### Multipair and Multitriple Individually and Overall Screened Cables

The new C-Lite cable range is constructed from flame retarded halogen free primary wire and crosslinked sheath materials.

Offering size and weight savings over traditional cables. The new C-Lite cable range is suitable for use in general power, lighting, communication, control and instrumentation applications.

**Field of application**

**Instrumentation and communication control**
**General power and lighting**

**Voltage class**

**0.6/1kV**

**Temperature class**

**90°C**

**Flame retarded**

**IEC 60332-1,-3**

**Cable jacket**

**Zerohal**

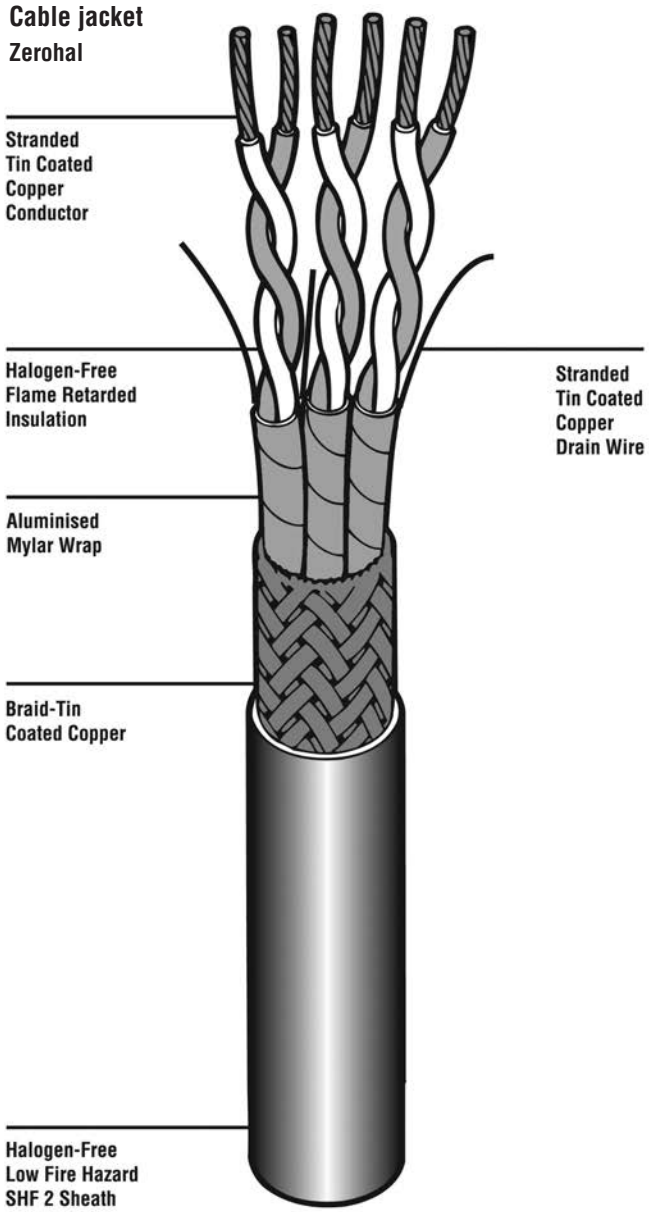


**Core Identification**

| Pairs | Light Blue | White |
|---|---|---|
| 1 | 1 | 2 |
| 2 | 3 | 4 |
| 3 | 5 | 6 |

Additional pairs numbered sequentially

| Triples | Red | Light Blue | White |
|---|---|---|---|
| 1 | 1 | 2 | 3 |
| 2 | 4 | 5 | 6 |
| 3 | 7 | 8 | 9 |

Additional triples numbered sequentially

**Approvals**

DNV, LR, GL, ABS, KR, CCS, RMRS, NK, BV

**Pending**

RINA



Catalog 1654025
Revised 3-13

www.te.com

Dimensions are shown for reference purposes only. Specifications subject to change.

Dimensions are in millimeters unless otherwise specified.

USA: +1 800 522 6752
Asia Pacific: +86 0 400 820 6015
UK: +44 800 267 666

For additional support numbers please visit www.te.com

## C-Lite CL105-PIO/C-Lite CL105-TIO (Continued)

| Ordering Description | OD Under jacket (mm) | Nom Wall (mm) | Nom OD (mm) | Tolerance (mm) | Nom weight (kg/km) |
|---|---|---|---|---|---|
| **PAIRS** | | | | | |
| CL105-1x2x0.5 - PIO | 3.7 | 0.9 | 5.5 | 0.4 | 56 |
| CL105-2x2x0.5 - PIO | 6.7 | 1.1 | 8.9 | 0.6 | 117 |
| CL105-3x2x0.5 - PIO | 6.9 | 1.1 | 9.1 | 0.6 | 132 |
| CL105-4x2x0.5 - PIO | 7.6 | 1.1 | 9.8 | 0.6 | 155 |
| CL105-7x2x0.5 - PIO | 9.3 | 1.2 | 11.7 | 0.8 | 230 |
| CL105-10x2x0.5 - PIO | 10.7 | 1.2 | 13.1 | 0.9 | 300 |
| CL105-14x2x0.5 - PIO | 12.6 | 1.3 | 15.2 | 1.0 | 413 |
| CL105-19x2x0.5 - PIO | 14.5 | 1.4 | 17.3 | 1.1 | 538 |
| CL105-24x2x0.5 - PIO | 16.4 | 1.5 | 19.4 | 1.3 | 684 |
| CL105-37x2x0.5 - PIO | 20.3 | 1.6 | 23.5 | 1.5 | 1023 |
| CL105-1x2x0.75 - PIO | 4.1 | 1.0 | 6.1 | 0.4 | 68 |
| CL105-2x2x0.75 - PIO | 7.5 | 1.1 | 9.7 | 0.6 | 144 |
| CL105-3x2x0.75 - PIO | 7.7 | 1.1 | 9.9 | 0.6 | 165 |
| CL105-4x2x0.75 - PIO | 8.5 | 1.1 | 10.7 | 0.7 | 200 |
| CL105-7x2x0.75 - PIO | 10.5 | 1.2 | 12.9 | 0.8 | 294 |
| CL105-10x2x0.75 - PIO | 12 | 1.3 | 14.6 | 0.9 | 395 |
| CL105-14x2x0.75 - PIO | 14.1 | 1.4 | 16.9 | 1.1 | 544 |
| CL105-19x2x0.75 - PIO | 16.6 | 1.5 | 19.6 | 1.3 | 735 |
| CL105-24x2x0.75 - PIO | 18.4 | 1.5 | 21.4 | 1.4 | 891 |
| CL105-37x2x0.75 - PIO | 22.9 | 1.7 | 26.3 | 1.7 | 1352 |
| CL105-1x2x1.0 - PIO | 4.4 | 1.0 | 6.4 | 0.4 | 78 |
| CL105-2x2x1.0 - PIO | 8.1 | 1.1 | 10.3 | 0.7 | 167 |
| CL105-3x2x1.0 - PIO | 8.3 | 1.1 | 10.5 | 0.7 | 194 |
| CL105-4x2x1.0 - PIO | 9.2 | 1.2 | 11.6 | 0.8 | 243 |
| CL105-7x2x1.0 - PIO | 11.3 | 1.3 | 13.9 | 0.9 | 360 |
| CL105-10x2x1.0 - PIO | 13.1 | 1.3 | 15.7 | 1.0 | 492 |
| CL105-14x2x1.0 - PIO | 15.5 | 1.4 | 18.3 | 1.2 | 682 |
| CL105-19x2x1.0 - PIO | 18 | 1.5 | 21 | 1.4 | 891 |
| CL105-24x2x1.0 - PIO | 20.2 | 1.6 | 23.4 | 1.5 | 1131 |
| CL105-37x2x1.0 - PIO | 24.8 | 1.8 | 28.4 | 1.8 | 1665 |
| CL105-1x2x1.5 - PIO | 5.1 | 1.0 | 7.1 | 0.5 | 96 |
| CL105-2x2x1.5 - PIO | 9.4 | 1.2 | 11.8 | 0.8 | 219 |
| CL105-3x2x1.5 - PIO | 9.7 | 1.2 | 12.1 | 0.8 | 252 |
| CL105-4x2x1.5 - PIO | 10.7 | 1.2 | 13.1 | 0.9 | 310 |
| CL105-7x2x1.5 - PIO | 13.3 | 1.3 | 15.9 | 1.0 | 476 |
| CL105-10x2x1.5 - PIO | 15.5 | 1.4 | 18.3 | 1.2 | 664 |
| CL105-14x2x1.5 - PIO | 18.1 | 1.5 | 21.1 | 1.4 | 889 |
| CL105-19x2x1.5 - PIO | 21.2 | 1.6 | 24.4 | 1.6 | 1200 |
| CL105-24x2x1.5 - PIO | 23.6 | 1.7 | 27 | 1.8 | 1476 |
| CL105-37x2x1.5 - PIO | 29 | 2.0 | 33 | 2.1 | 2197 |
| **TRIPLES** | | | | | |
| CL105-1x3x0.75 - TIO | 4.4 | 1.0 | 6.4 | 0.4 | 62 |
| CL105-2x3x0.75 - TIO | 8 | 1.1 | 10.2 | 0.7 | 166 |
| CL105-4x3x0.75 - TIO | 9.5 | 1.2 | 11.9 | 0.8 | 249 |
| CL105-7x3x0.75 - TIO | 11.7 | 1.3 | 14.3 | 0.9 | 365 |
| CL105-10x3x0.75 - TIO | 15.6 | 1.4 | 18.4 | 1.2 | 552 |
| CL105-15x3x0.75 - TIO | 18.2 | 1.5 | 21.2 | 1.4 | 784 |
| CL105-1x3x1.5 - TIO | 5.4 | 1.0 | 7.4 | 0.5 | 113 |
| CL105-2x3x1.5 - TIO | 10.1 | 1.2 | 12.5 | 0.8 | 255 |
| CL105-4x3x1.5 - TIO | 12 | 1.3 | 14.6 | 0.9 | 388 |
| CL105-7x3x1.5 - TIO | 14.9 | 1.4 | 17.7 | 1.2 | 599 |

Note: For installation guidelines refer to TE installation guidelines document WT1189

## C-Lite Cables

### Primary Wire (Switchboard Cable)

The new C-Lite cable range is constructed from flame retarded halogen free primary wire and crosslinked sheath materials.

Offering size and weight savings over traditional cables. The new C-Lite cable range is suitable for use in general power, lighting, communication, control and instrumentation applications.

### Field of application

**Instrumentation and communication control**
**General power and lighting**

### Voltage class

**0.6/1kV**

### Temperature class

**90°C**

### Flame retarded

**IEC 60332-1,-3**

### Cable jacket

**Zerohal**

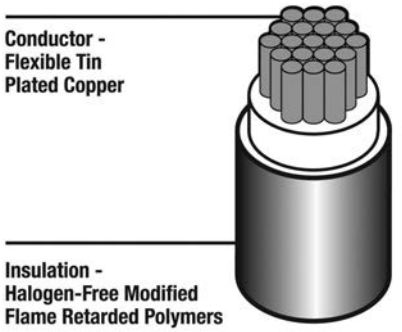


**Approvals**

DNV, LR, GL, ABS, KR, CCS, RMRS, NK, BV

**Pending**

RINA

| | Conductor | | Finished Wire | | |
|---|---|---|---|---|---|
| Part Number (CL105-) | Standing No' Dia (mm) | Max Diameter (mm) | Maximum Resistance @ 20°C (ohm/km) | Nominal Diameter (mm) | Nominal Weight (kg/km) |
| **Metric Cross Section** | | | | | |
| 0111-0.50-* | 19/0.18 | 0.90 | 40.1 | 1.40 | 6.60 |
| 0111-0.75-* | 19/0.23 | 1.15 | 26.7 | 1.60 | 8.90 |
| 0111-1.00-* | 19/0.25 | 1.26 | 20.0 | 1.75 | 10.7 |
| 0111-1.50-* | 37/0.23 | 1.58 | 13.7 | 2.08 | 16.0 |
| 0111-2.50-* | 37/0.29 | 2.01 | 8.21 | 2.55 | 25.7 |
| 0111-4.00-* | 56/0.30 | 2.57 | 4.89 | 3.09 | 43.6 |
| 0111-6.00-* | 84/0.31 | 3.05 | 3.16 | 3.95 | 58.3 |
| 0111-10.00-* | 80/0.41 | 4.00 | 1.95 | 4.95 | 100.0 |
| **AWG Cross Section** | | | | | |
| 0111-0.25-*(24AWG) | 19/0.13 | 0.63 | 84.32 | 1.14 | 3.59 |
| 0111-0.40-*(22AWG) | 19/0.16 | 0.79 | 50.5 | 1.33 | 5.20 |
| 0111-0.60-*(20AWG) | 19/0.20 | 1.01 | 31.1 | 1.52 | 7.40 |
| 0111-1.00-*(18AWG) | 19/0.25 | 1.26 | 20.0 | 1.75 | 10.7 |
| 0111-1.20-*(16AWG) | 19/0.29 | 1.42 | 15.3 | 1.93 | 13.6 |
| 0111-2.00-*(14AWG) | 37/0.25 | 1.82 | 10.5 | 2.36 | 20.3 |
| 0111-3.00-*(12AWG) | 37/0.32 | 2.24 | 6.58 | 2.78 | 31.0 |

Color Code: The *in the part number shall be replaced by a standard color code designator in accordance with Mil-Std-681

White preferred other colors available on request e.g. CL105-0111-0.5-9 White Insulation

Performance Requirements: To be tested to and meet the requirements of the issue in effect of DNV Type Approval Programme No. 6-827.11-1 (excluding sizes less than 0.5mm²) Note: For installation guidelines refer to TE installation guidelines document WT1189.

## C-Lite Approvals

| Approval Body | Approval System | Certificate Numbers |
|---|---|---|
| Det Norske Veritas (DNV) | Type Approval Program No. 6-827.11.1 | E-7276, E-7277,E-7278, E-7279, E-7280, E-7281 |
| Lloyds Register (LR) | 2002 Type Approval System | 99/0154(E1) |
| Germanischer Lloyd (GL) | Type Approval System | 33 106-6 HH, 33 108-6 HH |
| American Bureau of Shipping (ABS) | Type Approval Program | 06-LB158945-PDA |
| Korean Register (KR) | Type Approval | LDN20867-EL001 |
| Russian Register of Shipping (RMRS) | Type Approval | 07.04389.260, 07.04390.260, 07.04392.260, 07-04393.260 07.04394.260, 07-04395.260 |
| China Classification Society (CCS) | Type Approval | LD07W00001 |
| Nippon Kaiji Kyokai (NK) | Type Approval | TA07631M; TA07630M |
| **Pending** | | |
| Bureau Veritas (BV) | | |
| Registro Italiano Navale (RINA) | | |

Additional Type Approvals on request



Catalog 1654025
Revised 3-13

www.te.com

Dimensions are shown for reference purposes only. Specifications subject to change.

Dimensions are in millimeters unless otherwise specified.

USA: +1 800 522 6752
Asia Pacific: +86 0 400 820 6015
UK: +44 800 267 666

For additional support numbers please visit www.te.com

## C-Lite Cables (Continued)

**Technical Information**

### Current Carrying Capacity

Current carrying capacity is defined as the continuous current which when passed through a wire will increase the temperature of the conductor from a specific ambient temperature to the maximum temperature rating of the insulation/sheath.

### Temperature Rise v Current Guide

For Type CL105 in free air (single core)

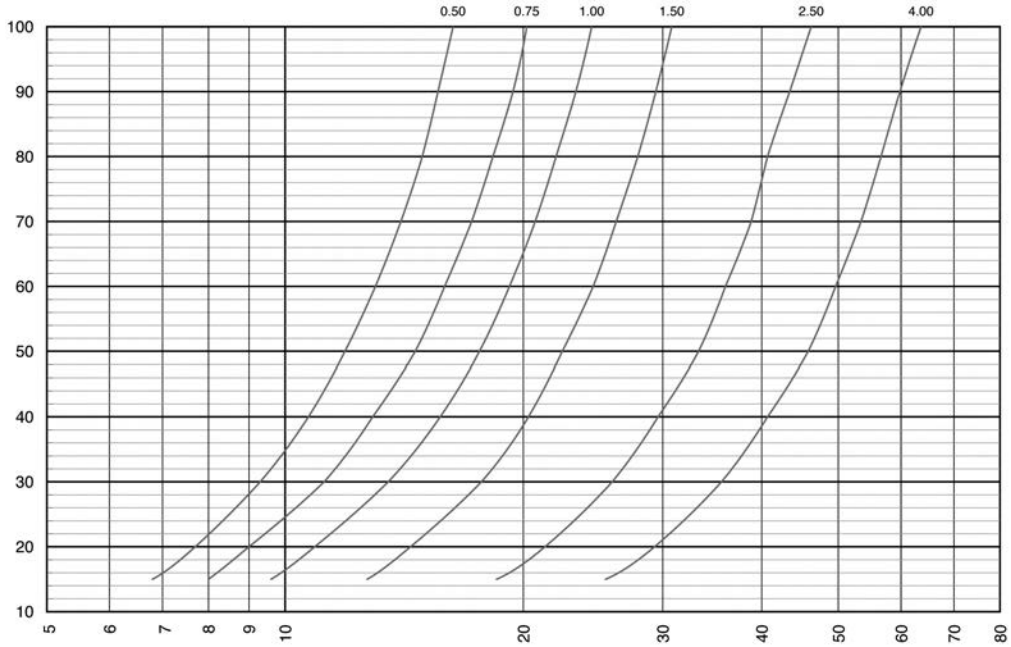


| No of cores | Derating Factor |
|---|---|
| 2 | 0.825 |
| 3 | 0.73 |
| 4 | 0.66 |
| 7 | 0.54 |
| 9 | 0.49 |
| 12 | 0.43 |
| 15 | 0.39 |
| 18 | 0.36 |
| 21 | 0.33 |
| 24 | 0.31 |
| 27 | 0.29 |
| 30 | 0.28 |
| 37 | 0.26 |

### Short Circuit Current

The short circuit current is based on the material the wire is made of, the cross sectional area of the wire and the maximum temperature rating of the insulation material. The short circuit current for a given wire size is provided in the table as constant current for a given amount of time.

| Cross-Section of the conductor in mm² | Duration of short circuit in seconds. | | | | |
|---|---|---|---|---|---|
| | 0.2 | 0.5 | 1.0 | 2.0 | 3.0 |
| 0.5 | 122 | 77 | 54 | 38 | 31 |
| 0.75 | 183 | 115 | 82 | 58 | 47 |
| 1.0 | 243 | 154 | 109 | 77 | 63 |
| 1.5 | 365 | 231 | 163 | 115 | 94 |
| 2.5 | 609 | 385 | 272 | 192 | 157 |
| 4.0 | 974 | 616 | 435 | 308 | 251 |
| | Short circuit current in Amps | | | | |







Dimensions are shown for reference purposes only. Specifications subject to change.

Dimensions are in millimeters unless otherwise specified.

USA: +1 800 522 6752
Asia Pacific: +86 0 400 820 6015
UK: +44 800 267 666

For additional support numbers please visit www.te.com

## C-Lite Cables (Continued)

### Specification Summary

| Examination or test | Test basis | Requirements | Test on |
|---|---|---|---|
| **General properties** | | | |
| Braid coverage | IEC 60092-350 | 90% minimum coverage density | Cable |
| Metallic coating of copper conductors | IEC 60092-350<br>by inspection | Conductor surface will be smooth and uniform.<br>Insulation will not adhere to the conductor. | Conductor |
| **Physical properties** | | | |
| Tensile strength and ultimate elongation | IEC 60811-1-1 | 20MPa minimum, 150% minimum (insulation)<br>(speed 50±10 mm/min) | Insulation |
| Scrape abrasion resistance | NF F 63-808 | 500 cycles minimum<br>(5N load, 0.45 mm diameter rod, 20°C,<br>55 cycles/minute) | Core |
| Dynamic cut through | NF F 63-808 | 50N minimum<br>(90° 0.13 mm radius blade, 20°C, 100g/s load) | Core |
| Notch propagation | NF F 63-808 | No dielectric breakdown<br>(0.05 mm notch, 6X mandrel, 1.5kV ac for 1 minute) | Core |
| Mechanical/particular characteristic of sheathing compounds | IEC 60092-350, 12.4<br>IEC 60092-359<br>Table II & III | SHF1 or SHF2 | Sheath |
| **Thermal properties** | | | |
| Lifetime | BS 3G230 | >20000h @ 120°C | Core |
| Accelerated ageing | IEC 60811-1-2 | No cracks, no dielectric breakdown<br>(168h @ 150°C, 1.5kV ac for 5 minutes) | Core |
| Insulation blocking | NF F 63-808 | Cores must be easily separated (6h @ 150°C) | Core |
| Cold bend<br>(Where outer diameter <12.5 mm) | IEC 60811-1-4 | No cracks, no dielectric breakdown<br>(-30°C, 10X mandrel, 1.5kV ac for 5 mins for 1m core)<br>(-30°C, 10X mandrel, 3.5kV ac for 5 min.<br>Sample of cable) | <br>Core<br><br>Cable |
| Current overload | BS 3G230 | No cracks, no dielectric breakdown (30s @ 250°C,<br>6X mandrel, wind as in lifetime test, 1.5kV ac for 5 minutes) | Core |
| **Electrical properties** | | | |
| AC and DC voltage tests | IEC 60092-350 | No dielectric breakdown<br>(3.5kV ac/8.4kV dc for 5 minutes for 1m of core)<br>(3.5kV ac/8.4kV dc for 5 minutes for each delivery length of cable) | <br>Core<br>Cable |
| Insulation – continuity proof test | IEC 60092-350<br>Clause 10.3b | No dielectric breakdown<br>At least 8kV impulse, 8kV dc or 3.5kV ac | Core |
| Insulation resistance at 20°C | IEC 60092-350 | 500MΩkM min. @ 20°C<br>(5m length, quote actual IR) | Core |
| Insulation resistance at 90°C | IEC 60092-350 | 1.5MΩkM min @ 90°C<br>(5m length, quote actual IR) | Core |
| Increase in a.c. capacitance after immersion in water | IEC 60092-350 | $C_{14}$-$C_1$≤0.15 $C_1$, $C_{14}$-$C_7$ ≤0.05$C_7$<br>(14 days @ 50°C in tap water) | Core |
| **Environmental properties** | | | |
| Ozone resistance | IEC 60092-350<br>IEC 60811-2-1 | No crazing or cracking<br>(250-300ppm, 25°C, 30h) | Core |
| Fluid immersion: 72h @ 70°C – IRM 902, IRM 903, Diesel (F-76), 3.5% salt water | BS 3G230 | No cracking or dielectric breakdown 5% max, swell<br>(6X mandrel, soak in water, 1.5kV ac for 5 minutes) | Core |
| **Fire hazard properties** | | | |
| Flammability – small scale | IEC 60332-1 | Charring confined between 50mm and 540mm from lower edge of top support (Single vertical wire) | Core |
| Flammability – large scale | IEC 60332-3 | Category A, designation F | Cable |
| Halogen content | IEC 60684-2 cl, 45 | Less than 0.5% for each non metallic component | Cable |
| Toxicity index | IMO FTPC<br>Appendix 3 | It of less than 2, report Lc value | Cable |
| Smoke emission – small scale | ISO 5659-2<br>Appendix 3 | Ds4 150 max. and Dmax 150 max. VOF4 300 max. | Core |
| Smoke emission – Large scale | IEC 61034-2 | 70% minimum transmittance | Cable |

Note: For installation guidelines refer to TE installation guidelines document WT1189

## C-Lite Cables (Continued)

### Part Numbering System

**CL 105 - 3 G x 0.5 - S U**

**Component Construction**
I - Foil wrapped components, overall unshielded* cable
IO - Foil wrapped components, overall shielded* cable
F - Unshielded* components, overall foil wrapped cable
O - Unshielded* components, overall shielded* cable
U - Unshielded* components, overall unshielded* cable

**Component Type**
P - Pair
T - Trio
S - Single

**Conductor Size (in mm)**

**Core Identification**
G - Color coded cores
(No designator defaults to standard colors, light blue and white)

**Number of Components**
Standard construction - number of conductors
Example: 2 = 2 conductors
3 = 3 conductors

Complex construction - number of component cables x number of wires in the component cable
Example: 3x2 = 3 twisted pairs
7x3 = 7 twisted triples

**Product Type**
90 - meets requirements of SHF1
105 - meets requirements of SHF2

**Basic Product Number**

*also referred to as screened or unscreened





Catalog 1654025
Revised 3-13

www.te.com

Dimensions are shown for reference purposes only. Specifications subject to change.

Dimensions are in millimeters unless otherwise specified.

USA: +1 800 522 6752
Asia Pacific: +86 0 400 820 6015
UK: +44 800 267 666

For additional support numbers please visit www.te.com

## C-Lite F (Fire Resistant) Cables

### Product Facts

- **Halogen free**
- **Small size**
- **Lightweight**
- **Tough flexible construction**
- **Resistant to hot diesel fuels, oils, grease, drilling fluids, and mechanical abuse**
- **Meets flame retardant requirements of IEC 60332-3**
- **Controlled dimensions**
- **Mud resistant to NEK 606**
- **Fire resistant to IEC 60331-31 (1000˚C)**

### Applications

TE is a major supplier in high performance cable systems to the offshore and industrial markets. Offshore applications include telecommunications, instrumentation and small power cables which represent approximately 80% of the total cable length on a platform.

### Easy Design

C-Lite F cable consists of Raychem brand primary C-Lite FR Wire with a Zerohal-EN jacket and can be used throughout an offshore platform, simplifying the selection of cables for designers and electrical engineers.

### Zerohal-EN Cables Generate Less Smoke

Zerohal-EN is a halogen-free cable jacket material, developed by TE and combines the good mechanical, environmental and electrical features of some conventional cables, with good fire hazard performance.

Until recently the flame retardance of cable jackets was achieved by the use of halogenated flame retardants that are effective fire suppressants, but which unfortunately produce dense smoke and corrosive acid gases when burned.

These effects are highly undesirable in a fire, causing corrosion damage to expensive and vital equipment, hindering evacuation and fire fighting and above all, endangering life.

### Benefits of Zerohal-EN cable

- Highly flame retarded
- Low smoke generation
- Low toxicity index
- Low acid gas generation
- Operating temperature -40°C up to +120°C
- Low water uptake
- Compatible with Raychem brand heat-shrink components - heat-shrink tubing, molded parts and adhesives.

### Smoke generation with time

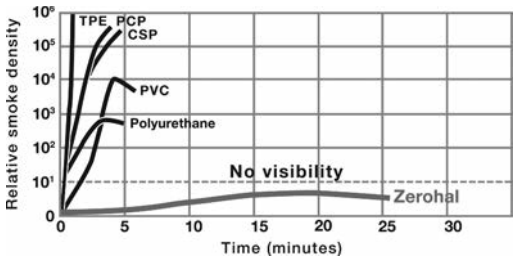


The 10% visibility line on the graph indicates the density of smoke (measured in the NBS smoke chamber) which would cause human disorientation and confusion.

| Available in: | Americas | Europe | Asia Pacific |
|---|---|---|---|
| | | ■ | |



Catalog 1654025
Revised 3-13

www.te.com

Dimensions are shown for reference purposes only. Specifications subject to change.

Dimensions are in millimeters unless otherwise specified.

USA: +1 800 522 6752
Asia Pacific: +86 0 400 820 6015
UK: +44 800 267 666

For additional support numbers please visit www.te.com

## C-Lite F (Fire Resistant) Cables (Continued)

**Traditional Fire Resistant Cable**

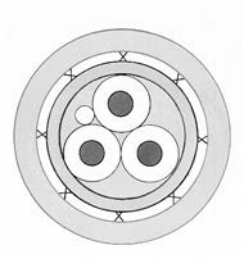

**C-Lite F Cable**

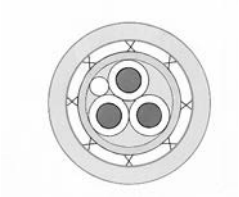

The illustration above shows a TE light weight cable on the right compared with a traditional offshore cable having the same cross-sectional area of copper. Both cables have the same number of conductors. A saving in size has been made on the insulation material, but without sacrificing the mechanical or electrical characteristics of the cable.

**Cable trays**

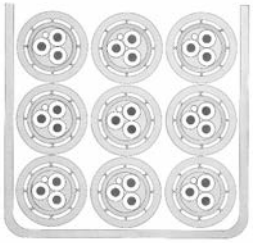

**A typical saving in the cable tray volume can exceed 40%**

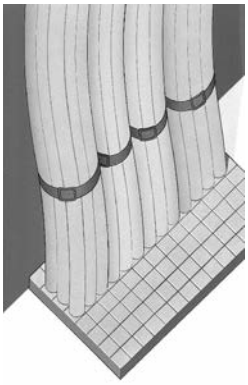

**Transits**

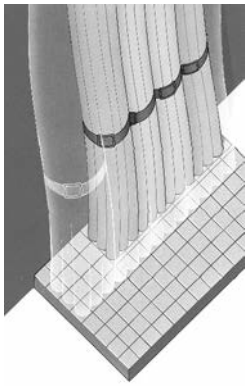

**Over 40% savings in area**

With more than 475 km of cabling on a typical large platform, there are potential savings of up to 105 tons topside by using C-Lite throughout the platform. The total cabling system, together with smaller cable glands, trays and transits can lead to overall weight savings of approximately 165 tons and cost savings in excess of 15%.

### Designing Platforms

Platforms are becoming smaller and more sophisticated with an ever increasing complexity of electronic systems, sensors, communications and safety equipment. More cables are therefore required to fit into smaller spaces.

C-Lite F small size cable can be a distinct advantage over conventional cables.

### Space saving when refurbishing platforms

As technology advances, engineers are called upon to update and modify existing systems or fit completely new ones.

To provide all the necessary interconnections, hundreds of multicore cables have to run throughout the platform. These, along with cables for power, lighting and instrumentation, create a severe space problem on cable trays, cable transits through fire walls, marshalling boxes and gland plates.

Using C-Lite F cable installation is easier because the cable is smaller, lighter, more flexible and has a reduced bend radius than conventional cables.

### Lower total installed cost on new platforms

Weight is one of the key factors to consider when designing new platforms.

Reduced size and weight in cables allow for smaller and lighter gauge racking needing less support. Also, smaller transits and cable glands reduce material and installation costs. C-Lite F cable is easier to specify as it meets all the industry's essential requirements in one cable.

### Benefits of using TE C-Lite F cable

- Cable can be used throughout the platform
- Smaller tray work/more cables per tray
- Lighter supports
- Smaller cable glands/ gland plate optimization
- More cables through transit blocks
- Time saving on installation
- Less cable accessories
- Less inventory
- Lower total installed cost
- Wide size range: 0.50-10.00mm$^2$







Dimensions are shown for reference purposes only. Specifications subject to change.

Dimensions are in millimeters unless otherwise specified.

USA: +1 800 522 6752
Asia Pacific: +86 0 400 820 6015
UK: +44 800 267 666

For additional support numbers please visit www.te.com

## FlexLite Commercial Wire

**Available in:**

| | |
|---|---|
| Americas | ■ |
| Europe | ■ |
| Asia Pacific | ■ |

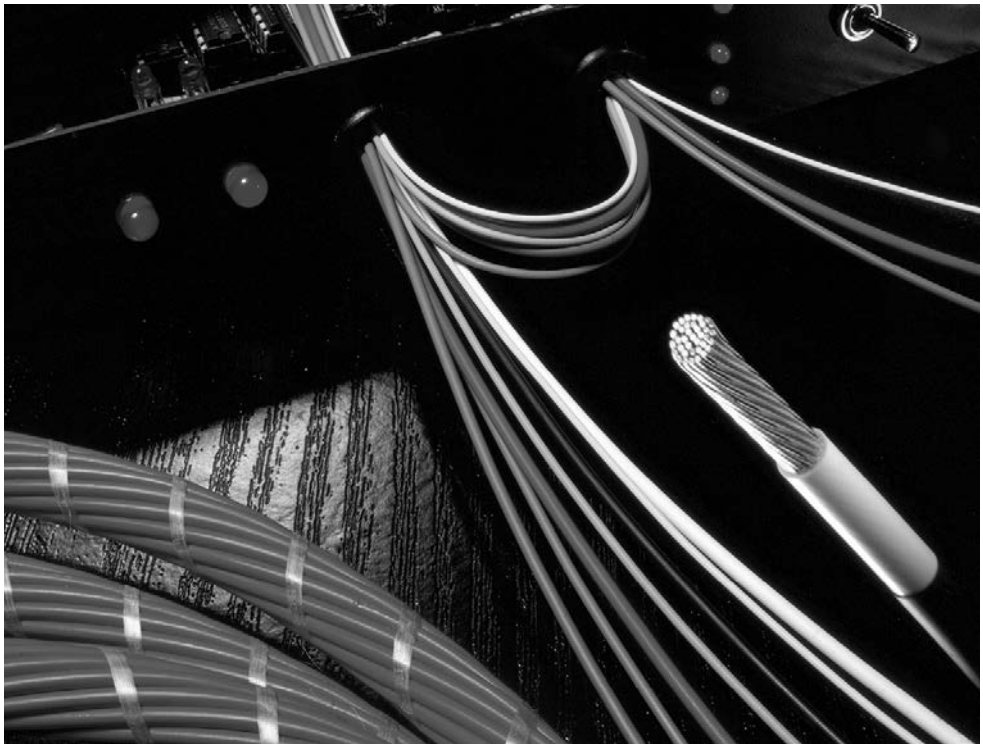

### Selection Guide

| Application | Temperature Rating (°C/°F) | Features and Benefits | Product Name |
|---|---|---|---|
| Intermittent-duty motors and heating elements | -45°C to 125°C<br>-49°F to 257°F | ■ Insulation that does not melt and flow at high temperatures<br>■ Excellent chemical resistance<br>■ VW-1 | FlexLite DW |
| Electronics, appliance, and motor applications | -55°C to 135°C<br>-67°F to 275°F | ■ Small size, light weight<br>■ No plasticizers or corrosive outgassing | FlexLite TW |
| General purpose commercial and industrial | 150°C | ■ Excellent shop handling<br>■ Excellent chemical resistance<br>■ Non-melting insulation | FlexLite CW |
| Lighting, motor applications | -55°C to 200°C<br>-67°F to 392°F | ■ Insulation does not melt and flow at high temperature<br>■ VW-1<br>■ Excellent shop handling<br>■ No cold-flow problems | FlexLite HT |
| Lighting, appliances, motors | -65°C to 250°C<br>-85°F to 482°F | ■ Very high temperature<br>■ VW-1<br>■ Superb chemical resistance<br>■ Excellent shop handling | FlexLite TX |

### FlexLite/UL Style Cross-Reference

**Primary Wire**

| Product | UL Style | Temperature Rating | Voltage Rating | AWG Range | Part Description |
|---|---|---|---|---|---|
| FlexLite DW* | 3584 | 125°C [257°F] | 600 volts | 14-26 | FLDWX031X |
| FlexLite TW | 10208 | 135°C [275°F] | 600 volts | 10-28 | FLTWX031X |
| FlexLite CW | 10916 | 150°C [302°F] | 600 volts | $0.35mm^2$=$2.50mm^2$ | FLCW0219& 0211 |
| FlexLite HT* | 3557 | 200°C [392°F] | 600 volts | 12-26 | FLHTX031X |
| FlexLite TX | 10297 | 250°C [482°F] | 600 volts | 10-26 | FLTXX031X |

Note: Additional UL-recognized cable constructions are available. Please contact TE for details.
*Available in both metric and imperial sizes.

### UL Marking and Labeling

All FlexLite products are UL labeled and reel marked. UL surface marking is additional. Please contact TE for further information.



Catalog 1654025
Revised 3-13

www.te.com

Dimensions are shown for reference purposes only. Specifications subject to change.

Dimensions are in millimeters unless otherwise specified.

USA: +1 800 522 6752
Asia Pacific: +86 0 400 820 6015
UK: +44 800 267 666

For additional support numbers please visit www.te.com

## FlexLite (Continued)

### Part Numbering System

**FL XX X X X X X - Size - X/X - X**

**Basic Product Number**

**Product Type (UL Style - Temperature Rating)**
CW - UL Style 3751 - 150˚C
DW - UL Style 3584 - 125˚C
TW - UL Style 10208 - 135˚C
HT - UL Style 3557 - 200˚C
TX - UL Style 10297 - 250˚C

**Conductor Stranding**
A - Solid
B - 7 strand
C - 19 strand
D - 37 strand
E - Rope Lay

**Construction**
0 - Primary wire; or unshielded & unjacketed cable
1 - Round braid shielded & jacketed cable*
6 - Special constructions

**Class of Wire**
1 - 150 volt
2 - 300 volt
3 - 600 volt

**Number of Conductors**
1 through 10 (designator for 10 conductor = 0)

**Conductor Type**
1 - Tin-coated copper
2 - Silver-coated copper
3 - Nickel coated copper
9 - Bare copper

**Conductor Size (AWG) or (Metric)**

**Primary Wire Insulation Color (code per MIL-STD-681)**

| | | | |
|---|---|---|---|
| 0 - Black | 3 - Orange | 6 - Blue | 9 - White |
| 1 - Brown | 4 - Yellow | 7 - Violet | |
| 2 - Red | 5 - Green | 8 - Gray | |

**Jacket Color (code per MIL-STD-681)**
(codes same as for Primary Wire Insulation Color)

**Part Numbering System is a cross reference only and not meant for part creation.**

*Shield coating same as conductor coating

| | |
|---|---|
| **Typical ordering example** | 19 strand, 20 AWG tin-coated copper, two component, shielded and jacketed cable, 600 volt, blue and white components, white jacket; part number FLDWC1321-20-6/9-9. |
| **Ordering information** | For product requiring CUR (Canadian UL) or CSA marking part numbering descriptions above MIGHT NOT apply. Please contact TE for further information. |

## FlexLite CW

### General Purpose and Motor Lead Wire

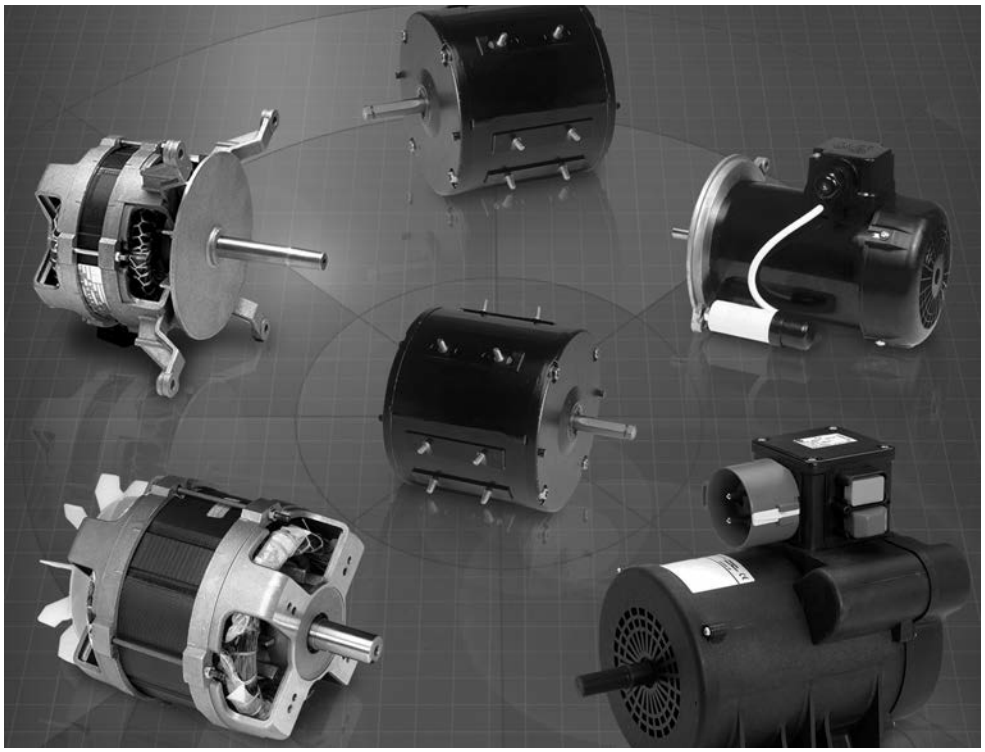

### Product Facts

- UL rated operating temperature to 150°C [302°F]
- Non melting cross-linked insulation material provides current overload and resistance to short term thermal excursions
- Insulation offers excellent performance against most fluids, including lubricating oils, hydraulic fluids, cleaning fluids, acids and alkalis
- Varnish resistant for motor lead applications
- Excellent shop floor handling enables ease of termination and full compatibility with automatic cutting and stripping machines
- 600 volt rating exceeds most application needs
- Full range of sizes and colors available
- Thin wall product improves packaging possibilities

### Applications

FlexLite CW (FLCW) is designed for general purpose Commercial and Industrial applications. This dual wire combines excellent flexibility, shop floor handling and stripping.

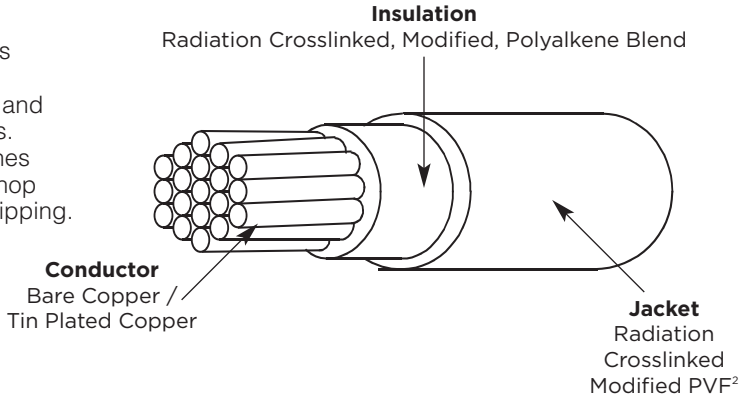


### Specifications/Approvals

| Series | UL |
|---|---|
| CW | Style 3751 |

| Available in: | Americas | Europe | Asia Pacific |
|---|---|---|---|
| | ■ | ■ | ■ |



Catalog 1654025
Revised 3-13

www.te.com

Dimensions are shown for reference purposes only. Specifications subject to change.

Dimensions are in millimeters unless otherwise specified.

USA: +1 800 522 6752
Asia Pacific: +86 0 400 820 6015
UK: +44 800 267 666

For additional support numbers please visit www.te.com

## FlexLite CW (Continued)

### Construction Details
### Bare Copper Conductor -FLCW0219

| | Conductor | | | Finished Wire | | | | |
|---|---|---|---|---|---|---|---|---|
| | | | | | Diameter mm | | | |
| Part Number | Cross Sectional Area mm2 | Nominal Stranding No / Dia mm | Diameter mm max | Conductor Resistance at 20°C Ω/km max | Lower Spec Limit | Target | Upper Spec Limit | Approx. Weight per Unit Length kg/km |
| FLCW0219-0.35-* | 0.35 | 7/0.26 | 0.78 | 51.7 | 1.59 | 1.63 | 1.67 | 5.16 |
| FLCW0219-0.50-* | 0.50 | 19/0.19 | 0.95 | 36.9 | 1.76 | 1.80 | 1.84 | 6.9 |
| FLCW0219-0.75-* | 0.75 | 19/0.23 | 1.15 | 24.6 | 1.96 | 2.00 | 2.04 | 10.9 |
| FLCW0219-1.00-* | 1.00 | 19/0.26 | 1.30 | 18.40 | 2.11 | 2.15 | 2.19 | 11.6 |
| FLCW0219-1.50-* | 1.50 | 19/0.32 | 1.60 | 12.60 | 2.41 | 2.45 | 2.49 | 16.3 |
| FLCW0219-2.50-* | 2.5 | 19/0.41 | 2.05 | 7.56 | 2.86 | 2.94 | 2.94 | 25.70 |

### Tin Plated Conductor -FLCW0211

| | Conductor | | | Finished Wire | | | | | | |
|---|---|---|---|---|---|---|---|---|---|---|
| | | | | | Insulation Thickness | | Diameter mm | | | |
| Part Number | Cross Sectional Area mm² | Nominal Stranding No / Dia mm | Diameter mm max | Conductor Resistance at 20°C Ω/km max | Absolute Minimum mm | Minimum Average mm | Lower Spec Limit | Target | Upper Spec Limit | Nominal Weight per Unit Length kg/km |
| FLCW0211-0.35-* | 0.35 | 7/0.25 | 0.79 | 50.9 | 0.28 | 0.36 | 1.60 | 1.64 | 1.68 | 5.22 |
| FLCW0211-0.50-* | 0.50 | 19/0.18 | 0.88 | 40.1 | 0.28 | 0.36 | 1.69 | 1.73 | 1.77 | 6.51 |
| FLCW0211-0.75-* | 0.75 | 19/0.23 | 1.08 | 24.7 | 0.28 | 0.36 | 1.89 | 1.93 | 1.97 | 8.99 |
| FLCW0211-1.00-* | 1.00 | 19/0.25 | 1.21 | 20.0 | 0.28 | 0.36 | 2.02 | 2.06 | 2.10 | 10.7 |
| FLCW0211-1.50-* | 1.50 | 19/0.32 | 1.51 | 12.5 | 0.28 | 0.36 | 2.32 | 2.36 | 2.40 | 15.8 |
| FLCW0211-2.50-* | 2.50 | 19/0.41 | 1.94 | 7.88 | 0.28 | 0.36 | 2.75 | 2.79 | 2.83 | 25.0 |

### Ballis Resistor

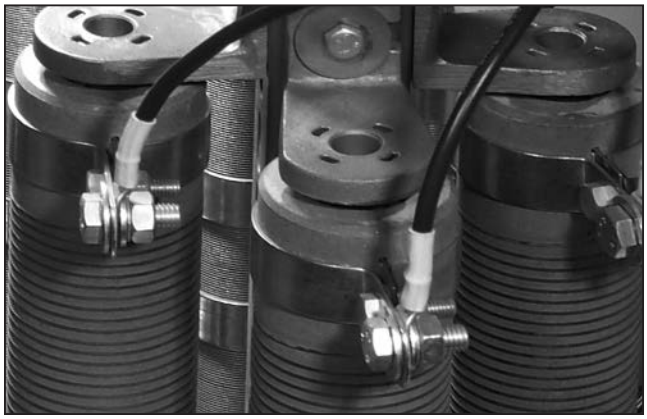

### Coil

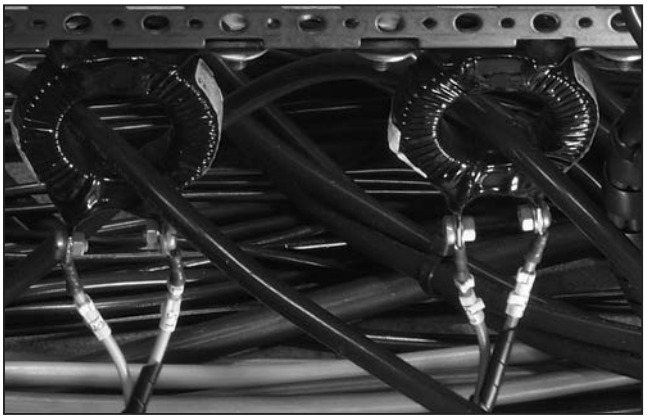

### Radiation Cross-Linking

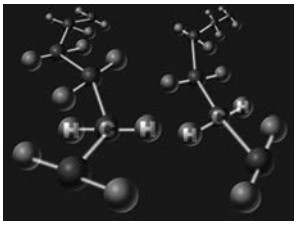

Molecular Chain

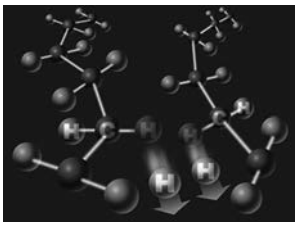

Crosslinking

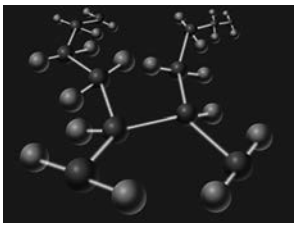

Crosslinked Molecular Chain







Dimensions are shown for reference purposes only. Specifications subject to change.

Dimensions are in millimeters unless otherwise specified.

USA: +1 800 522 6752
Asia Pacific: +86 0 400 820 6015
UK: +44 800 267 666

For additional support numbers please visit www.te.com

## FlexLite DW

### Dual-Wall Primary Wire

### Product Facts

- UL rated operating temperature to 125°C [257°F]
- Non melting insulation material
- Thin-wall product for size and weight savings
- Excellent chemical resistance
- Dual-wall construction for increased mechanical performance
- Compatibility with automated stripping equipment
- Variety of colors and constructions

### Applications

FlexLite DW (FLDW) offers a high-performance non melting insulation suitable for a variety of applications, especially those with occasional high-temperature excursions, such as high-power battery-operated devices or intermittent-duty motors or heating elements.

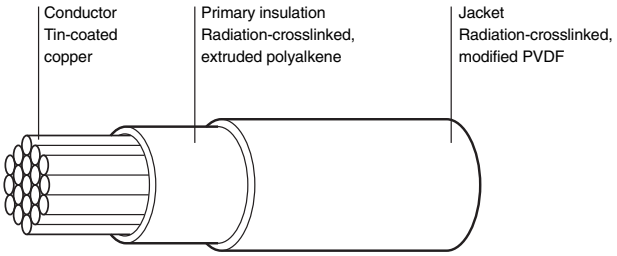


### Specifications/Approvals

| Series | UL | CUR | CSA | TE |
|---|---|---|---|---|
| DW | Style 3584<br>Flammability VW-1<br>Temperature rating 125°C [257°F] | Recognized | Certified AWMIA | WCD-3106 |

| Available in: | Americas | Europe | Asia Pacific |
|---|---|---|---|
| | ■ | ■ | ■ |



Catalog 1654025
Revised 3-13

www.te.com

Dimensions are shown for reference purposes only. Specifications subject to change.

Dimensions are in millimeters unless otherwise specified.

USA: +1 800 522 6752
Asia Pacific: +86 0 400 820 6015
UK: +44 800 267 666

For additional support numbers please visit www.te.com

## FlexLite DW (Continued)

### Construction Details

| Part No. | Wire Size (AWG) | Conductor Stranding (No. x AWG) | Nominal Diameter mm [inch] | Finished Wire Maximum Resistance at 20°C (68°F) Ω/km [Ω /1000 ft] | Diameter Minimum mm [inch] | Diameter Nominal mm [inch] | Diameter Maximum mm [inch] | Nominal Weight in kg/km [lb/1000 ft] |
|---|---|---|---|---|---|---|---|---|
| FLDWC0311-26-* | 26 | 19 x 38 | .470 [.0185] | 132 [40.1] | .965 [.038] | 1.02 [.040] | 1.07 [.042] | 2.38 [1.6] |
| FLDWC0311-24-* | 24 | 19 x 36 | .597 [.0235] | 83.3 [25.4] | 1.12 [.044] | 1.17 [.046] | 1.22 [.048] | 3.57 [2.4] |
| FLDWC0311-22-* | 22 | 19 x 34 | .749 [.0295] | 52.2 [15.9] | 1.32 [.052] | 1.37 [.054] | 1.42 [.056] | 5.21 [3.5] |
| FLDWC0311-20-* | 20 | 19 x 32 | .953 [.0375] | 32.0 [9.76] | 1.52 [.060] | 1.57 [.062] | 1.63 [.064] | 7.59 [5.1] |
| FLDWC0311-18-* | 18 | 19 x 30 | 1.18 [.0465] | 20.4 [6.22] | 1.78 [.070] | 1.85 [.073] | 1.93 [.076] | 11.46 [7.7] |
| FLDWC0311-16-* | 16 | 19 x 29 | 1.33 [.0525] | 15.8 [4.82] | 1.98 [.078] | 2.06 [.081] | 2.13 [.084] | 14.58 [9.8] |
| FLDWC0311-14-* | 14 | 19 x 27 | 1.68 [.0660] | 10.0 [3.05] | 2.39 [.094] | 2.49 [.098] | 2.59 [.102] | 21.88 [14.7] |

* Replace asterisk with color code designator:
0 = Black 3 = Orange 7 = Violet
1 = Brown 4 = Yellow 8 = Gray
2 = Red 5 = Green 9 = White
For example:FLDWC0311-20-9 = AWG 20, white.

### Construction Details

| Nominal CSA Part No. | Wire Size ($mm^2$) | Conductor Stranding (No. x Dia.) | Diameter (min.) mm [inch] | Diameter (max.) mm [inch] | Finished Wire Maximum Resistance at 20°C (68°F) Ω/km [Ω /1000 ft] | Diameter Lower Spec. Limit mm [inch] | Diameter Target Value mm [inch] | Diameter Upper Spec. Limit mm [inch] | Nominal Weight in kg/km [lb/1000 ft] |
|---|---|---|---|---|---|---|---|---|---|
| FLDWC0311-0.25* | 0.25 | 19 x 0.127 | 0.55 [.022] | 0.63 [.025] | 83.3 [25.5] | 1.12 [.044] | 1.17 [.046] | 1.22 [.048] | 3.45 [2.32] |
| FLDWC0311-0.35* | 0.35 | 19 x 0.15 | 0.72 [.028] | 0.77 [.030] | 56.1 [17.1] | 1.31 [.052] | 1.37 [.054] | 1.42 [.056] | 4.79 [3.21] |
| FLDWC0311-0.50* | 0.50 | 19 x 0.19 | 0.86 [.034] | 0.88 [.035] | 40.1 [12.2] | 1.46 [.057] | 1.51 [.059] | 1.56 [.061] | 6.46 [4.34] |
| FLDWC0311-0.75* | 0.75 | 19 x 0.23 | 1.05 [.041] | 1.08 [.043] | 24.7 [7.53] | 1.65 [.065] | 1.70 [.067] | 1.75 [.069] | 8.93 [5.99] |
| FLDWC0311-1.00* | 1.00 | 19 x 0.25 | 1.17 [.046] | 1.26 [.050] | 20.0 [6.1] | 1.78 [.070] | 1.85 [.073] | 1.93 [.076] | 10.90 [7.31] |
| FLDWC0311-1.50* | 1.50 | 19 x 0.32 | 1.35 [.053] | 1.58 [.062] | 13.7 [4.2] | 2.19 [.086] | 2.27 [.089] | 2.34 [.092] | 17.90 [12.01] |
| FLDWC0311-2.00* | 2.00 | 19 x 0.36 | 1.66 [0.65] | 1.79 [0.07] | 9.7 | 2.42 [.095] | 2.52 [.099] | 2.62 [.103] | 21.30 [14.29] |
| FLDWC0311-2.50* | 2.50 | 19 x 0.41 | 1.85 [0.07] | 2.01 [0.08] | 8.2 | 2.63 [.104] | 2.73 [.104] | 2.83 [.111] | 27.40 [18.39] |

* Replace asterisk with color code designator:
0 = Black 3 = Orange 6 = Blue 9 = White
1 = Brown 4 = Yellow 7 = Violet
2 = Red 5 = Green 8 = Gray
For example: FLDWC0311-20-9 = AWG 20, white.
FLDWC0311-1.00-9 = Size 1.00 $mm^2$, white.

For product requiring CUR (Canadian UL) or CSA marking in 16-10 AWG, stranded conductors only, the part numbering descriptions above **MIGHT NOT** apply. Please contact TE for further information.







Dimensions are shown for reference purposes only. Specifications subject to change.

Dimensions are in millimeters unless otherwise specified.

USA: +1 800 522 6752
Asia Pacific: +86 0 400 820 6015
UK: +44 800 267 666

For additional support numbers please visit www.te.com

## FlexLite TW

### Thin-Wall Hookup Wire and Cable

### Product Facts

- UL rated operating temperature to 135°C [275°F]
- Thin-wall product for size and weight savings
- Tough insulation material
- Excellent chemical resistance
- Gauge sizes from 10-32 AWG
- No plasticizers or corrosive outgassing, which can be detrimental to sensitive electrical and electronic components

### Applications

FlexLite TW (FLTW) wire is commonly used in applications that demand smaller, more rugged components, often in elevated temperatures. Designed to offer reduced size while maintaining superior mechanical performance, FLTW in many cases is a lower-cost solution than expensive fluoropolymer wire.

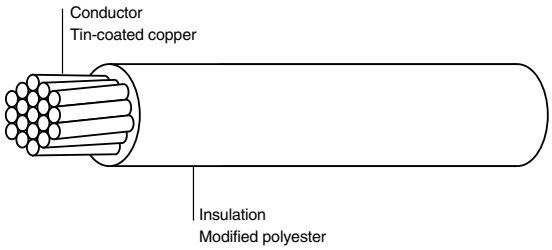


### Specifications/Approvals

| Series | UL | CUR | CSA | TE |
|---|---|---|---|---|
| TW | Style 10208<br>Temperature rating 135°C [275°F] | Recognized | Certified AWMIA | WCD-3106 |

| Available in: | Americas | Europe | Asia Pacific |
|---|---|---|---|
| | ■ | ■ | ■ |



Catalog 1654025
Revised 3-13

www.te.com

Dimensions are shown for reference purposes only. Specifications subject to change.

Dimensions are in millimeters unless otherwise specified.

USA: +1 800 522 6752
Asia Pacific: +86 0 400 820 6015
UK: +44 800 267 666

For additional support numbers please visit www.te.com

## FlexLite TW (Continued)

### Construction Details

| Part No. | Wire Size (AWG) | Conductor Stranding (No. x AWG) | Nominal Diameter mm [inch] | Finished Wire Maximum Resistance at 20°C (68°F) Ω/km [Ω /1000 ft] | Diameter Minimum mm [inch] | Diameter Nominal mm [inch] | Diameter Maximum mm [inch] | Nominal Weight in kg/km [lb/1000 ft] |
|---|---|---|---|---|---|---|---|---|
| FLTWC0311-26-* | 26 | 19 x 38 | .483 [0.19] | 150.0 [45.8] | .813 [.032] | .864 [.034] | .914 [.036] | 1.93 [1.3] |
| FLTWC0311-24-* | 24 | 19 x 36 | .610 [0.24] | 94.2 [28.7] | .965 [.038] | 1.02 [.040] | 1.07 [.042] | 2.83 [1.9] |
| FLTWC0311-22-* | 22 | 19 x 34 | .762 [.030] | 59.4 [18.1] | 1.14 [.045] | 1.19 [.047] | 1.24 [.049] | 4.17 [2.8] |
| FLTWC0311-20-* | 20 | 19 x 32 | .965 [.038] | 37.4 [11.4] | 1.35 [.053] | 1.40 [.055] | 1.45 [.057] | 6.25 [4.2] |
| FLTWC0311-18-* | 18 | 19 x 30 | 1.19 [.047] | 23.5 [7.15] | 1.60 [.063] | 1.65 [.065] | 1.70 [.067] | 9.52 [6.4] |
| FLTWC0311-16-* | 16 | 19 x 29 | 1.35 [.053] | 15.8 [4.82] | 1.75 [.069] | 1.83 [.072] | 1.91 [.075] | 12.20 [8.2] |
| FLTWC0311-14-* | 14 | 19 x 27 | 1.68 [.066] | 10.0 [3.05] | 2.16 [.085] | 2.26 [.089] | 2.36 [.093] | 18.90 [12.7] |
| FLTWD0311-12-* | 12 | 37 x 28 | 2.16 [.085] | 6.59 [2.01] | 2.64 [.104] | 2.74 [.108] | 2.84 [.112] | 28.87 [19.4] |
| FLTWD0311-10-* | 10 | 37 x 26 | 2.72 [.107] | 4.13 [1.26] | 3.23 [1.27] | 3.33 [.131] | 3.43 [1.35] | 45.39 [30.5] |

* Replace asterisk with color code designator:
0 = Black 3 = Orange 6 = Blue 9 = White
1 = Brown 4 = Yellow 7 = Violet
2 = Red 5 = Green 8 = Gray
For example: FLTWC0311-22-9 = AWG 22, white.

For product requiring CUR (Canadian UL) or CSA marking in 16-10 AWG, stranded conductors only, the part numbering descriptions above **DO NOT** apply. Please contact TE for further information.







Dimensions are shown for reference purposes only. Specifications subject to change.

Dimensions are in millimeters unless otherwise specified.

USA: +1 800 522 6752
Asia Pacific: +86 0 400 820 6015
UK: +44 800 267 666

For additional support numbers please visit www.te.com

## FlexLite HT

### High-Temperature Hookup Wire

### Product Facts

- UL rated operating temperature to 200°C [392°F]
- Exceptional chemical resistance
- Thin-wall, for size and weight savings
- Tough fluoropolymer insulation material
- Excellent stripping and handling
- Variety of constructions and colors
- Crosslinked to minimize cold flow
- VW-1 flammability rating
- 600 V rating

### Applications

FlexLite HT (FLHT) wire is the product of choice for high-temperature applications. It offers shop-handling advantages over silicone/ fiberglass constructions (SF1/SF2) and is cost-competitive with other fluoropolymer wire. Applications include halogen lights, wireless tools and small high-end appliances where space and temperature are issues.

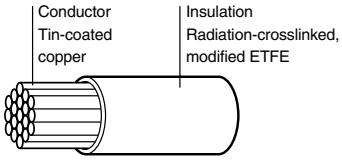


### Specifications/Approvals

| Series | UL | CUR | CSA | TE |
|---|---|---|---|---|
| HT | Style 3557<br>Flammability VW-1<br>Temperature rating 200°C [392°F] | Recognized | Certified AWMIA/B | WCD-3106 |

| Available in: | Americas | Europe | Asia Pacific |
|---|---|---|---|
| | ■ | ■ | ■ |



Catalog 1654025
Revised 3-13

www.te.com

Dimensions are shown for reference purposes only. Specifications subject to change.

Dimensions are in millimeters unless otherwise specified.

USA: +1 800 522 6752
Asia Pacific: +86 0 400 820 6015
UK: +44 800 267 666

For additional support numbers please visit www.te.com

## FlexLite HT (Continued)

### Construction Details

| Part No. | Wire Size (AWG) | Conductor Stranding (No. x AWG) | Nominal Diameter mm [inch] | Finished Wire Maximum Resistance at 20°C (68°F) Ω/km [Ω /1000 ft] | Diameter Minimum mm [inch] | Diameter Nominal mm [inch] | Diameter Maximum mm [inch] | Nominal Weight in kg/km [lb/1000 ft] |
|---|---|---|---|---|---|---|---|---|
| FLHTC0311-26-* | 26 | 19 x 38 | .483 [.019] | 150.0 [45.8] | .765 [.0301] | .800 [.0315] | .836 [.0329] | 1.89 [1.27] |
| FLHTC0311-24-* | 24 | 19 x 36 | .610 [.024] | 94.2 [28.7] | .892 [.0351] | .927 [.0365] | .963 [.0379] | 2.75 [1.85] |
| FLHTC0311-22-* | 22 | 19 x 34 | .762 [.030] | 59.4 [18.1] | 1.04 [.0411] | 1.08 [.0425] | 1.12 [.0439] | 4.08 [2.74] |
| FLHTC0311-20-* | 20 | 19 x 32 | .965 [.038] | 37.4 [11.4] | 1.25 [.0491] | 1.28 [.0505] | 1.32 [.0519] | 6.21 [4.17] |
| FLHTC0311-18-* | 18 | 19 x 30 | 1.19 [.047] | 23.5 [7.15] | 1.48 [.0583] | 1.52 [.0600] | 1.57 [.0617] | 9.43 [6.34] |
| FLHTC0311-16-* | 16 | 19 x 29 | 1.35 [.053] | 15.8 [4.82] | 1.67 [.0656] | 1.71 [.0675] | 1.76 [.0694] | 12.0 [8.09] |
| FLHTC0311-14-* | 14 | 19 x 27 | 1.68 [.066] | 10.0 [3.05] | 2.03 [.0799] | 2.08 [.0820] | 2.14 [.0841] | 18.6 [12.5] |
| FLHTD0311-12-* | 12 | 37 x 28 | 2.16 [.085] | 6.59 [2.01] | 2.50 [.0984] | 2.57 [.1010] | 2.63 [.1036] | 28.7 [19.3] |
| FLHTD0311-10-* | 10 | 37 x 26 | 2.72 [.107] | 4.13 [1.26] | 3.07 [.1210] | 3.18 [.1250] | 3.28 [.1290] | 30.7 [45.7] |

### Construction Details

| Part No. | Nominal CSA ($mm^2$) | Conductor Stranding No/Dia. (mm) | Diameter (min.) mm [inch] | Diameter (max.) mm [inch] | Finished Wire Maximum Resistance at 20°C (68°F) (ohms/km) | Diameter Lower Spec. Limit mm [inch] | Diameter Target Value mm [inch] | Diameter Upper Spec. Limit mm [inch] | Nominal Weight (kg/km) |
|---|---|---|---|---|---|---|---|---|---|
| FLHTC0311-0.25-* | 0.25 | 19/0.127 | 0.55 [.022] | 0.63 [.025] | 83.3 | 0.96 [.038] | 1.00 [.039] | 1.03 [.041] | 2.95 |
| FLHTC0311-0.35-* | 0.35 | 19/0.15 | 0.74 [.029] | 0.76 [.030] | 52.2 | 1.12 [.044] | 1.16 [.046] | 1.19 [.047] | 4.22 |
| FLHTC0311-0.50-* | 0.50 | 19/0.19 | 0.86 [.034] | 0.88 [.035] | 40.1 | 1.24 [.049] | 1.27 [.050] | 1.31 [.052] | 5.59 |
| FLHTC0311-0.75-* | 0.75 | 19/0.23 | 1.05 [.041] | 1.08 [.043] | 24.7 | 1.43 [.056] | 1.47 [.058] | 1.51 [.059] | 7.95 |
| FLHTC0311-1.00-* | 1.00 | 19/0.25 | 1.17 [.046] | 1.26 [.050] | 20.0 | 1.58 [.062] | 1.62 [.064] | 1.66 [.065] | 9.85 |
| FLHTC0311-1.50-* | 1.50 | 19/0.32 | 1.35 [.053] | 1.58 [.062] | 13.7 | 1.82 [.072] | 1.87 [.074] | 1.92 [.076] | 15.69 |
| FLHTC0311-2.00-* | 2.00 | 19/0.36 | 1.66 [.065] | 1.79 [.070] | 9.7 | 2.05 [.081] | 2.10 [.083] | 2.16 [.085] | 18.67 |
| FLHTC0311-2.50- | 2.50 | 19/0.41 | 1.85 [.073] | 2.01 [.080] | 8.2 | 2.24 [.088] | 2.31 [.091] | 2.38 [.094] | 24.62 |

* Replace asterisk with color code designator:
0 = Black 3 = Orange 6 = Blue 9 = White
1 = Brown 4 = Yellow 7 = Violet
2 = Red 5 = Green 8 = Gray
For example: FLHTC0311-22-9 = AWG 22, white.
FLHTC0311-0.50-9 = Size 0.50$mm^2$, white.

For product requiring CUR (Canadian UL) or CSA marking in 16-10 AWG, stranded conductors only, the part numbering descriptions above **DO NOT** apply. Please contact TE for further information.







Dimensions are shown for reference purposes only. Specifications subject to change.

Dimensions are in millimeters unless otherwise specified.

USA: +1 800 522 6752
Asia Pacific: +86 0 400 820 6015
UK: +44 800 267 666

For additional support numbers please visit www.te.com

## Thermocouple Extension Cable

### Product Facts

- **19-strand conductor for flexibility**
- **All 4 types available in different combinations**
- **Custom designs with different insulation systems are available**
- **Lightweight, small size thermocouple extension cables**

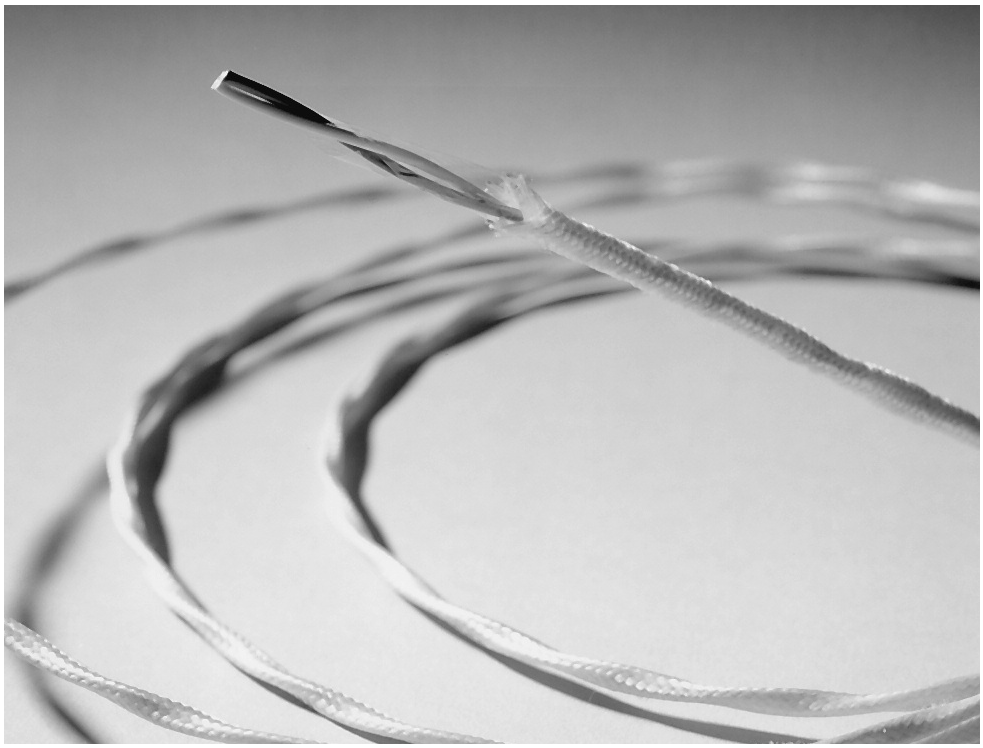

### Applications

TE manufactures a broad range of Raychem brand Thermocouple extension cables in four thermoelement combinations. Each provides accurate transmission of electro-motive force (EMF) from a Thermocouple element lead wire of the same conductor material to a thermometer, also known as a pyrometer.

All four types of Thermocouple extension cables use 19-strand conductors and are available in twisted pair, jacketed twisted pair, and shielded and jacketed twisted pair configurations. A range of cables is available from 16 AWG to 24 AWG.

Wires and cables are insulated and jacketed with radiation-crosslinked ETFE, which has a continuous operating temperature of -65°C to +200°C [-85°F to +392°F]. This material, which is fully specified in TE SPEC 55, has excellent physical properties and is highly resistant to a wide range of chemicals.

### Operating Temperature Range

-65°C to 200°C
[-85°F to 392°F]

| Available in: | Americas | Europe | Asia Pacific |
|---|---|---|---|
| | ■ | ■ | ■ |



Catalog 1654025
Revised 3-13

www.te.com

Dimensions are shown for reference purposes only. Specifications subject to change.

Dimensions are in millimeters unless otherwise specified.

USA: +1 800 522 6752
Asia Pacific: +86 0 400 820 6015
UK: +44 800 267 666

For additional support numbers please visit www.te.com

## Thermocouple Extension Cable (Continued)

### Properties

| Extension Cable Type | Thermoelement Combination | Initial Calibration Tolerances for Thermocouple Extension Wires | | |
|---|---|---|---|---|
| | | Temperature Range | Limit of Range | EMF (mv)* (min.–max.) |
| EX | Chromel-Constantan | 0°C to 200°C [0°F to 392°F] | ±1.7°C [35.1°F] | 6.18–6.45 |
| JX | Iron-Constantan | 0°C to 200°C [0°F to 392°F] | ±2.2°C [36.0°F] | 5.15–5.39 |
| KX | Chromel-Alumel | 0°C to 200°C [0°F to 392°F] | ±2.2°C [36.0°F] | 4.00–4.19 |
| TX | Copper-Constantan | 0°C to 100°C [0°F to 212°F] | ±1.0°C [32.0°F] | 4.24–4.32 |

Note: The above is in accordance with ANSI-MC-96.1-1982.
*EMF is measured in millivolts (mv) at 100°C [212°F] with reference junction at 0°C [0°F].

### Product Dimensions** (Nominal)

| AWG Size | Twisted Pair | | Twisted, Jacketed Pair | | Twisted, Shielded, 38 AWG Braid Strand, Jacketed Pair | |
|---|---|---|---|---|---|---|
| | Outside Diameter | Weight in kg/km (lb/1000 ft) | Outside Diameter | Weight in kg/km (lb/1000 ft) | Outside Diameter | Weight in kg/km (lb/1000 ft) |
| 24 | 2.29 [.090] | 7.3 [4.9] | 2.67 [.106] | 9.9 [6.7] | 3.12 [.123] | 16.5 [11.1] |
| 22 | 2.60 [.102] | 9.9 [6.7] | 2.99 [.118] | 13.0 [8.8] | 3.43 [.135] | 21.4 [14.4] |
| 20 | 2.99 [.118] | 14.4 [9.7] | 3.40 [.134] | 18.0 [12.1] | 3.83 [.151] | 27.8 [18.7] |
| 18 | 3.56 [.140] | 20.9 [14.1] | 3.96 [.156] | 25.1 [16.9] | 4.34 [.173] | 37.5 [25.2] |
| 16 | 3.96 [.156] | 26.3 [17.7] | 4.37 [.172] | 30.9 [20.8] | 4.80 [.189] | 44.9 [30.2] |

**Dimensions for 19-strand-conductor thermocouple. Extension Types EX, JX, KX, and TX.

### Extension Cable

#### Color-Coding

Thermocouple extension cables are available with the wires color-coded in accordance with five standards: MIL-STD-687, ANSI-MC-96.1, British Standard Code BS 1843, Japanese JIS-C-1602 and IEC 584-3 color coding system (see bel0w) (International Standard)

#### Special Cables

Thermocouple extension cables are also available in solid-conductor and seven-strand-conductor configurations. They come in a variety of thermoelement combinations, gauges, insulations, and multiple-pair designs, and they are available for outer space applications. Contact TE for details.

### Extension Cable

| Type EX | Chromel + | Constantan - | Jacket (if present) | Color code Wire | Jacket |
|---|---|---|---|---|---|
| ANSI-MC-96.1 | Violet | Red | Violet | 7/2 | 7 |
| British Std.-BS 1843 | Brown | Blue | Brown | 1/6 | 1 |
| JIS-C-1602 | Violet | Red | Violet | 7/2 | 7 |
| IEC 584-3 | Violet | White | Violet | 7/9 | 7 |
| **Type JX** | **Iron +** | **Constantan -** | **Jacket** | **Wire** | **Jacket** |
| MIL-STD-687 | Black | Yellow | White | 0/4 | 9 |
| ANSI-MC-96.1 | White | Red | Black | 9/2 | 0 |
| British Std.-BS 1843 | Yellow | Blue | Black | 4/6 | 0 |
| JIS-C-1602 | Red | White | Yellow | 2/9 | 4 |
| IEC 584-3 | Black | White | Black | 0/9 | 0 |
| **Type KX** | **Chromel +** | **Alumel -** | **Jacket** | **Wire** | **Jacket** |
| MIL-STD-687 | White | Green | White | 9/5 | 9 |
| ANSI-MC-96.1 | Yellow | Red | Yellow | 4/2 | 4 |
| British Std.-BS 1843 | Brown | Blue | Red | 1/6 | 2 |
| JIS-C-1602 | Red | White | Blue | 2/9 | 6 |
| IEC 584-3 | Green | White | Green | 5/9 | 5 |
| **Type TX** | **Copper +** | **Constantan -** | **Jacket** | **Wire** | **Jacket** |
| MIL-STD-687 | Red | Yellow | White | 2/4 | 9 |
| ANSI-MC-96.1 | Blue | Red | Blue | 6/2 | 6 |
| British Std.-BS 1843 | White | Blue | Blue | 9/6 | 6 |
| JIS-C-1602 | Red | White | Brown | 2/9 | 1 |
| IEC 584-3 | Brown | White | Brown | 1/9 | 1 |





Catalog 1654025
Revised 3-13

www.te.com

Dimensions are shown for reference purposes only. Specifications subject to change.

Dimensions are in millimeters unless otherwise specified.

USA: +1 800 522 6752
Asia Pacific: +86 0 400 820 6015
UK: +44 800 267 666

For additional support numbers please visit www.te.com

## Thermocouple Extension Cable (Continued)

### Part Number Selection Table

The Thermocouple cable options outlined in the table on the previous page can be ordered from the table below.

TE will assign a new part number on request for cables falling outside the range shown in the table.

| Type | Twisted Pair | Twisted, Jacketed Pair | Shield Plating* | Twisted, Shielded, Jacketed Pair |
|---|---|---|---|---|
| EX | CTC-0077 | CTC-0079 | T | CTC-0074 |
| | | | N | 55A6169 |
| JX | 55A8131 | CTC-0080 | T | CTC-0044 |
| KX | 55A8002 | CTC-0012 | T | CTC-0018 |
| | | | N | CTC-0015 |
| | | | S | CTC-0057 |
| TX | CTC-0078 | CTC-0081 | T | CTC-0073 |

*T = Tin-coated copper.
N = Nickel-coated copper.
S = Silver-coated copper.



Catalog 1654025
Revised 3-13

www.te.com

Dimensions are shown for reference purposes only. Specifications subject to change.

Dimensions are in millimeters unless otherwise specified.

USA: +1 800 522 6752
Asia Pacific: +86 0 400 820 6015
UK: +44 800 267 666

For additional support numbers please visit www.te.com

## ElectroLoss Filterline

### Lightweight, Ruggedized Filterline Wire and Cable

### Product Facts

- Suppresses EMI above 100 MHz
- Light weight, small size
- SPEC 55 insulation
- 600 volt
- -65°C up to 200°C [-85°F to 392°F]

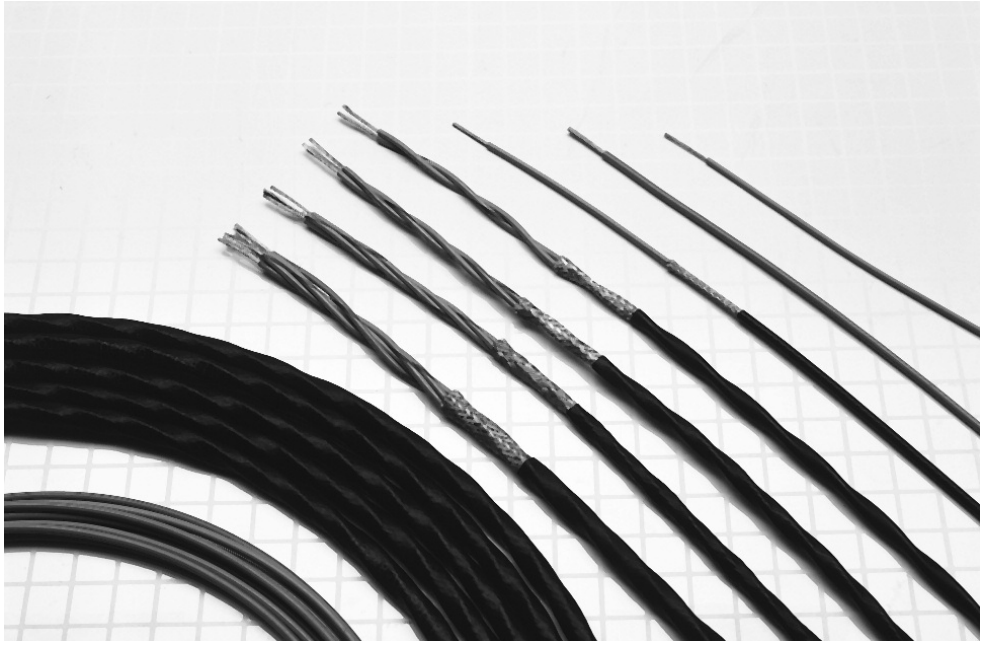

| Available in: | |
|---|---|
| Americas | ■ |
| Europe | ■ |
| Asia Pacific | ■ |

### Applications

Today's performance needs for military and commercial electronic systems require increasingly sophisticated equipment and greater use of composite structures and enclosures. As electronics become more sensitive, the EMI protection level for electrical equipment is increasing. The Raychem brand of ElectroLoss FilterLine wire and cable provide a high degree of EMI protection while functioning as conventional electrical wiring.

ElectroLoss FilterLine products include high-performance wire and cable, which when used as specified, suppress conducted and radiated EMI above 100 MHz.

A reliable alternative to conventional discrete filters and filter-pin connectors, ElectroLoss FilterLine cables are flexible, lightweight, and compatible with high-density connectors.

The ElectroLoss FilterLine wire and cable meets the performance requirements of SAE AS85485 originally a military specification developed to provide EMI protection for military electrical interconnects.

The absorptive layer in ElectroLoss FilterLine cable is constructed of a ferrite-loaded high-temperature polymer, which provides high-frequency EMI absorptive characteristics. Achieving maximum attenuation requires concentrating the electromagnetic fields in the absorptive layer — either with a metallic shield on each wire or by an overall metallic shield protecting a bundle of individual component wires.

Radiation-crosslinked, modified conductive EFTE jackets are used over shielded filter line cables to eliminate pathways between adjacent cable shields.

Application-driven alternative ElectroLoss FilterLine constructions built to the same rigorous standards demanded of the military requirements are also available. These alternatives offer significant weight savings through the use of flat braids, improved laser mark contrast, and a broader choice of conductors.

**55FA0511**

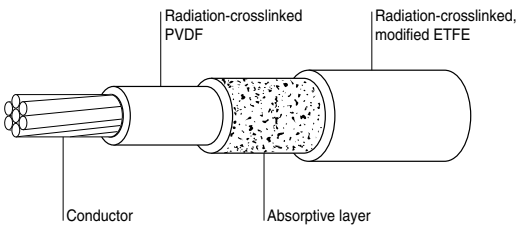


**55FB1511**

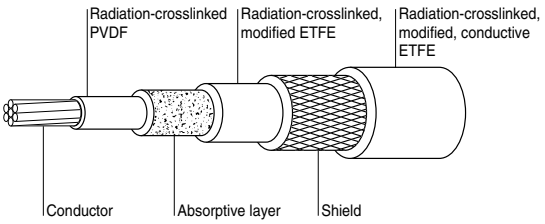






Catalog 1654025
Revised 3-13

www.te.com

Dimensions are shown for reference purposes only. Specifications subject to change.

Dimensions are in millimeters unless otherwise specified.

USA: +1 800 522 6752
Asia Pacific: +86 0 400 820 6015
UK: +44 800 267 666

For additional support numbers please visit www.te.com

## ElectroLoss Filterline (Continued)

### Performance

Effective against conducted EMI ElectroLoss FilterLine wire and cable systems attenuate high-frequency EMI and allow low frequency signals to pass with minimum loss. When properly installed and used, filter line wire and cables function as low-pass electrical filters, attenuating both conducted and radiated EMI above 100MHz. The performance of ElectroLoss FilterLine product is best demonstrated by measuring the attenuation (insertion loss) of a length of cable over a broad range of frequencies. Graph 1 depicts typical insertion loss characteristics.

**Graph 1 - Typical insertion loss**

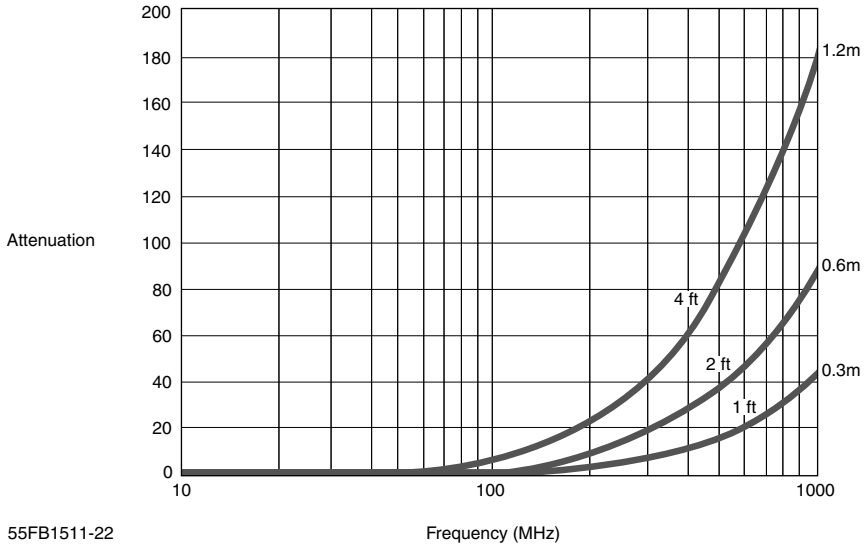


| | |
|---|---|
| Temperature rating | -65°C up to 200°C [-85°F to 392°F] |
| Voltage rating | 600V r.m.s |



Catalog 1654025
Revised 3-13

www.te.com

Dimensions are shown for reference purposes only. Specifications subject to change.

Dimensions are in millimeters unless otherwise specified.

USA: +1 800 522 6752
Asia Pacific: +86 0 400 820 6015
UK: +44 800 267 666

For additional support numbers please visit www.te.com

## Lightweight, Ruggedized Filterline Wire and Cable

### Single Conductor Wire Specifications 150˚C Rated Wire

| AWG Size | Conductor Stranding (Number x AWG) | Maximum Outside Diameter mm (in) | Maximum Weight Kg/Km (lb/1000 ft) | MIL-SPEC Part Number | TE Part Number |
|---|---|---|---|---|---|
| 24 | 19 x 36 silver coated high strength copper alloy | 1.19 [.047] | 4.46 [3.0] | M85485/10-24A | 55FA0514-24-* |
| 22 | 19 x 34 tin coated copper | 1.37 [.054] | 5.95 [4.0] | M85485/9-22A | 55FA0511-22-* |
| 20 | 19 x 32 tin coated copper | 1.57 [.062] | 8.63 [5.8] | M85485/9-20A | 55FA0511-20-* |
| 18 | 19 x 30 tin coated copper | 1.85 [.073] | 12.95 [8.7] | M85485/9-18A | 55FA0511-18-* |
| 16 | 19 x 29 tin coated copper | 2.08 [.082] | 16.67 [11.2] | M85485/9-16A | 55FA0511-16-* |
| 14 | 19 x 27 tin coated copper | 2.51 [.099] | 23.96 [16.1] | M85485/9-14A | 55FA0511-14-* |
| 12 | 37 x 28 tin coated copper | 2.95 [.116] | 35.71 [24.0] | M85485/9-12A | 55FA0511-12-* |
| 10 | 37 x 26 tin coated copper | 3.58 [.141] | 55.06 [37.0] | M85485/9-10A | 55FA0511-10-* |

* The color of component wire shall be light violet designated by 7L.
The designated colors for components in finished cable shall be light violet for component 1 and light violet with stripe designators for remaining component wires as follows:

| Component wire | 1 | 2 | 3 | 4 | 5 |
|---|---|---|---|---|---|
| Color designator | 7L | 7L6 | 7L3 | 7L5 | 7L2 |

### Low Fluoride Specifications 200˚C Rated Wire

| AWG Size | Conductor Stranding (Number x AWG) | Maximum Outside Diameter mm (in) | Maximum Weight Kg/Km (lb/1000 ft) | TE Part Number |
|---|---|---|---|---|
| 24 | 19 x 36 silver coated high strength copper alloy | 1.19 [.047] | 4.46 [3.0] | 55FAF7128-24-* |
| 22 | 19 x 34 silver coated copper | 1.37 [.054] | 5.95 [4.0] | 55FAF0512-22-* |
| 20 | 19 x 32 silver coated copper | 1.57 [.062] | 8.63 [5.8] | 55FAF0512-20-* |
| 18 | 19 x 30 silver coated copper | 1.85 [.073] | 12.95 [8.7] | 55FAF0512-18-* |
| 16 | 19 x 29 silver coated copper | 2.08 [.082] | 16.67 [11.2] | 55FAF0512-16-* |
| 14 | 19 x 27 silver coated copper | 2.51 [.099] | 23.96 [16.1] | 55FAF0512-14-* |
| 12 | 37 x 28 silver coated copper | 2.95 [.116] | 35.71 [24.0] | 55FAF0512-12-* |
| 10 | 37 x 26 silver coated copper | 3.58 [.141] | 55.06 [37.0] | 55FAF0512-10-* |

The color of the component wire shall be light yellow designated by 4L. The designated colors for components shall be light yellow for component 1 and light yellow with stripe designators for remaining component wires as follows:

| Component Wire | 1 | 2 | 3 | 4 | 5 |
|---|---|---|---|---|---|
| Color Designation | 4L | 4L6 | 4L3 | 4L5 | 4L2 |





Dimensions are shown for reference purposes only. Specifications subject to change.

Dimensions are in millimeters unless otherwise specified.

USA: +1 800 522 6752
Asia Pacific: +86 0 400 820 6015
UK: +44 800 267 666

For additional support numbers please visit www.te.com

## Lightweight, Ruggedized Filterline Wire and Cable
(Continued)

### Unshielded, Unjacketed 2-5 Conductor Cable Specifications 150˚C Rated Wire

| AWG Size | Number of Conductor | Maximum Outside Diameter mm [in.] | Maximum Weight Kg/Km (lb/1000 ft) | MIL-SPEC Part Number | TE Part Number |
|---|---|---|---|---|---|
| 24 | 2 | 2.39 [.094] | 9.08 [6.1] | M85485/11-24M2A | 55FA0524-24-* |
| 22 | 2 | 2.74 [.108] | 12.20 [8.2] | M85485/11-22T2A | 55FA0521-22-* |
| 20 | 2 | 3.15 [.124] | 17.56 [11.8] | M85485/11-20T2A | 55FA0521-20-* |
| 18 | 2 | 3.71 [.146] | 26.34 [17.7] | M85485/11-18T2A | 55FA0521-18-* |
| 16 | 2 | 4.17 [.164] | 33.93 [22.8] | M85485/11-16T2A | 55FA0521-16-* |
| 14 | 2 | 5.03 [.198] | 48.81 [32.8] | M85485/11-14T2A | 55FA0521-14-* |
| | | | | | |
| 24 | 3 | 2.59 [.102] | 13.69 [9.2] | M85485/11-24M3A | 55FA0534-24-* |
| 22 | 3 | 2.97 [.117] | 18.15 [12.2] | M85485/11-22T3A | 55FA0531-22-* |
| 20 | 3 | 3.40 [.134] | 26.34 [17.7] | M85485/11-20T3A | 55FA0531-20-* |
| 18 | 3 | 4.01 [.158] | 39.58 [26.6] | M85485/11-18T3A | 55FA0531-18-* |
| 16 | 3 | 4.50 [.177] | 51.03 [34.3] | M85485/11-16T3A | 55FA0531-16-* |
| 14 | 3 | 5.44 [.214] | 73.36 [49.3] | M85485/11-14T3A | 55FA0531-14-* |
| | | | | | |
| 24 | 4 | 3.28 [.129] | 18.15 [12.2] | M85485/11-24M4A | 55FA0544-24-* |
| 22 | 4 | 3.78 [.149] | 24.25 [16.3] | M85485/11-22T4A | 55FA0541-22-* |
| 20 | 4 | 4.34[.171] | 35.27 [23.7] | M85485/11-20T4A | 55FA0541-20-* |
| 18 | 4 | 5.11 [.201] | 52.82 [35.5] | M85485/11-18T4A | 55FA0541-18-* |
| 16 | 4 | 5.74 [.226] | 68.00 [45.7] | M85485/11-16T4A | 55FA0541-16-* |
| 14 | 4 | 6.91 [.272] | 97.76 [65.7] | M85485/11-14T4A | 55FA0541-14-* |
| | | | | | |
| 24 | 5 | 3.58 [.141] | 22.77 [15.3] | M85485/11-24M5A | 55FA0554-24-* |
| 22 | 5 | 4.11 [.162] | 30.36 [20.4] | M85485/11-22T5A | 55FA0551-22-* |
| 20 | 5 | 4.72 [.186] | 44.04 [29.6] | M85485/11-20T5A | 55FA0551-20-* |
| 18 | 5 | 5.56 [.219] | 66.07 [44.4] | M85485/11-18T5A | 55FA0551-18-* |
| 16 | 5 | 6.25 [.246] | 84.96 [57.1] | M85485/11-16T5A | 55FA0551-16-* |
| 14 | 5 | 7.54 [.297] | 122.16 [82.1] | M85485/11-14T5A | 55FA0551-14-* |

* The color of component wire shall be light violet designated by 7L.
The designated colors for components in finished cable shall be light violet for component 1 and light violet with stripe designators for remaining component wires as follows:

| Component wire | 1 | 2 | 3 | 4 | 5 |
|---|---|---|---|---|---|
| Color designator | 7L | 7L6 | 7L3 | 7L5 | 7L2 |



Dimensions are shown for reference purposes only. Specifications subject to change.

Dimensions are in millimeters unless otherwise specified.

USA: +1 800 522 6752
Asia Pacific: +86 0 400 820 6015
UK: +44 800 267 666

For additional support numbers please visit www.te.com

## ElectroLoss Filterline (Continued)

### Low Fluoride Specifications
### 200˚C Rated Wire

| AWG Size | Number of Conductor | Maximum Outside Diameter mm [in.] | Maximum Weight Kg/Km (lb/1000 ft) | TE Part Number |
|---|---|---|---|---|
| 24 | 2 | 2.39 [.094] | 9.08 [6.1] | 55FAF7134-24-* |
| 22 | 2 | 2.74 [.108] | 12.20 [8.2] | 55FAF0522-22-* |
| 20 | 2 | 3.15 [.124] | 17.56 [11.8] | 55FAF0522-20-* |
| 18 | 2 | 3.71 [.146] | 26.34 [17.7] | 55FAF0522-18-* |
| 16 | 2 | 4.17 [.164] | 33.93 [22.8] | 55FAF0522-16-* |
| 14 | 2 | 5.03 [.198] | 48.81 [32.8] | 55FAF0522-14-* |
| | | | | |
| 24 | 3 | 2.59 [.102] | 13.69 [9.2] | 55FAF7135-24-* |
| 22 | 3 | 2.97 [.117] | 18.15 [12.2] | 55FAF0532-22-* |
| 20 | 3 | 3.40 [.134] | 26.34 [17.7] | 55FAF0532-20-* |
| 18 | 3 | 4.01 [.158] | 39.58 [26.6] | 55FAF0532-18-* |
| 16 | 3 | 4.50 [.177] | 51.03 [34.3] | 55FAF0532-16-* |
| 14 | 3 | 5.44 [.214] | 73.36 [49.3] | 55FAF0532-14-* |
| | | | | |
| 24 | 4 | 3.28 [.129] | 18.15 [12.2] | 55FAF7136-24-* |
| 22 | 4 | 3.78 [.149] | 24.25 [16.3] | 55FAF0542-22-* |
| 20 | 4 | 4.34[.171] | 35.27 [23.7] | 55FAF0542-20-* |
| 18 | 4 | 5.11 [.201] | 52.82 [35.5] | 55FAF0542-18-* |
| 16 | 4 | 5.74 [.226] | 68.00 [45.7] | 55FAF0542-16-* |
| 14 | 4 | 6.91 [.272] | 97.76 [65.7] | 55FAF0542-14-* |
| | | | | |
| 24 | 5 | 3.58 [.141] | 22.77 [15.3] | 55FAF7137-24-* |
| 22 | 5 | 4.11 [.162] | 30.36 [20.4] | 55FAF0552-22-* |
| 20 | 5 | 4.72 [.186] | 44.04 [29.6] | 55FAF0552-20-* |
| 18 | 5 | 5.56 [.219] | 66.07 [44.4] | 55FAF0552-18-* |
| 16 | 5 | 6.25 [.246] | 84.96 [57.1] | 55FAF0552-16-* |
| 14 | 5 | 7.54 [.297] | 122.16 [82.1] | 55FAF0552-14-* |

The color of the component wire shall be light yellow designated by 4L. The designated colors for components shall be light yellow for component 1 and light yellow with stripe designators for remaining component wires as follows:

| Component Wire | 1 | 2 | 3 | 4 | 5 |
|---|---|---|---|---|---|
| Color Designation | 4L | 4L6 | 4L3 | 4L5 | 4L2 |







Dimensions are shown for reference purposes only. Specifications subject to change.

Dimensions are in millimeters unless otherwise specified.

USA: +1 800 522 6752
Asia Pacific: +86 0 400 820 6015
UK: +44 800 267 666

For additional support numbers please visit www.te.com

## ElectroLoss Filterline (Continued)

### Lightweight, Ruggedized Filterline Wire and Cable (Continued)

**Shielded, Jacketed 1-5 Conductor Cable Specifications**

**ElectroLoss Filterline Wire and Cable Light Weight Ruggedized Constructions — 150˚C**

| AWG Size | Number of Conductors | Shield Size AWG Tin Coated Copper | Maximum Outside Diameter mm (in) | Maximum Weight Kg/Km (lb/1000 ft) | MIL-SPEC Part Number | TE Part Number |
|---|---|---|---|---|---|---|
| 24 | 1 | 38 | 2.13 [.084] | 10.86 [7.3] | M85485/12-24U1A | 55FB1514-24-* |
| 22 | 1 | 38 | 2.31 [.091] | 13.09 [8.8] | M85485/12-22T1A | 55FB1511-22-* |
| 20 | 1 | 38 | 2.51 [.099] | 16.67 [11.2] | M85485/12-20T1A | 55FB1511-20-* |
| 18 | 1 | 38 | 2.79 [.110] | 22.17 [14.9] | M85485/12-18T1A | 55FB1511-18-* |
| 16 | 1 | 38 | 3.02 [.119] | 26.78 [18.0] | M85485/12-16T1A | 55FB1511-16-* |
| 14 | 1 | 38 | 3.45 [.136] | 35.86 [24.1] | M85485/12-14T1A | 55FB1511-14-* |
| 12 | 1 | 38 | 3.89 [.153] | 49.40 [33.2] | M85485/12-12T1A | 55FB1511-12-* |
| 10 | 1 | 38 | 4.55 [.179] | 71.57 [48.1] | M85485/12-10T1A | 55FB1511-10-* |
| 24 | 2 | 38 | 3.33 [.131] | 19.34 [13.0] | M85485/12-24U2A | 55FB1524-24-* |
| 22 | 2 | 38 | 3.68 [.145] | 23.81 [16.0] | M85485/12-22T2A | 55FB1521-22-* |
| 20 | 2 | 38 | 4.09 [.161] | 30.50 [20.5] | M85485/12-20T2A | 55FB1521-20-* |
| 18 | 2 | 38 | 4.65 [.183] | 41.37 [27.8] | M85485/12-18T2A | 55FB1521-18-* |
| 16 | 2 | 38 | 5.11 [.201] | 50.59 [34.0] | M85485/12-16T2A | 55FB1521-16-* |
| 14 | 2 | 38 | 6.02 [.237] | 69.49 [46.7] | M85485/12-14T2A | 55FB1521-14-* |
| 24 | 3 | 38 | 3.53 [.139] | 25.30 [17.0] | M85485/12-24U3A | 55FB1534-24-* |
| 22 | 3 | 38 | 3.91 [.154] | 31.10 [20.9] | M85485/12-22T3A | 55FB1531-22-* |
| 20 | 3 | 38 | 4.34 [.171] | 41.07 [27.6] | M85485/12-20T3A | 55FB1531-20-* |
| 18 | 3 | 38 | 4.95 [.195] | 56.54 [38.0] | M85485/12-18T3A | 55FB1531-18-* |
| 16 | 3 | 38 | 5.44 [.214] | 69.94 [47.0] | M85485/12-16T3A | 55FB1531-16-* |
| 14 | 3 | 38 | 6.43 [.253] | 96.87 [65.1] | M85485/12-14T3A | 55FB1531-14-* |
| 24 | 4 | 38 | 4.19 [.165] | 31.69 [21.3] | M85485/12-24U4A | 55FB1544-24-* |
| 22 | 4 | 38 | 4.67 [.184] | 39.58 [26.6] | M85485/12-22T4A | 55FB1541-22-* |
| 20 | 4 | 38 | 5.23 [.206] | 52.68 [35.4] | M85485/12-20T4A | 55FB1541-20-* |
| 18 | 4 | 38 | 5.99 [.236] | 72.91 [49.0] | M85485/12-18T4A | 55FB1541-18-* |
| 16 | 4 | 38 | 6.68 [.263] | 91.36 [61.4] | M85485/12-16T4A | 55FB1541-16-* |
| 14 | 4 | 38 | 7.85 [.309] | 125.59 [84.4] | M85485/12-14T4A | 55FB1541-14-* |
| 24 | 5 | 38 | 4.52 [.178] | 37.80 [25.4] | M85485/12-24U5A | 55FB1554-24-* |
| 22 | 5 | 38 | 5.05 [.199] | 47.32 [31.8] | M85485/12-22T5A | 55FB1551-22-* |
| 20 | 5 | 38 | 5.66 [.223] | 63.39 [42.6] | M85485/12-20T5A | 55FB1551-20-* |
| 18 | 5 | 38 | 6.55 [.258] | 89.43 [60.1] | M85485/12-18T5A | 55FB1551-18-* |
| 16 | 5 | 38 | 7.24 [.285] | 111.00 [74.6] | M85485/12-16T5A | 55FB1551-16-* |
| 14 | 5 | 38 | 8.53 [.336] | 153.26 [103.0] | M85485/12-14T5A | 55FB1551-14-* |

* The color of component wire shall be light violet designated by 7L.
The designated colors for components in finished cable shall be light violet for component 1 and light violet with stripe designators for remaining component wires as follows:

| Component wire | 1 | 2 | 3 | 4 | 5 |
|---|---|---|---|---|---|
| Color designator | 7L | 7L6 | 7L3 | 7L5 | 7L2 |

### Fluid Resistance

| | |
|---|---|
| Fluids | Hydrocarbons |
| | Fuels and lubricants |
| | Alcohols |
| | Cleaning fluids |
| | Glycols |
| | Synthetic fuels and lubricants |
| | Ketones |





Dimensions are shown for reference purposes only. Specifications subject to change.

Dimensions are in millimeters unless otherwise specified.

USA: +1 800 522 6752
Asia Pacific: +86 0 400 820 6015
UK: +44 800 267 666

For additional support numbers please visit www.te.com

## Lightweight, Ruggedized Filterline Wire and Cable
(Continued)

### Electroloss Filterline Wire and Cable Light Weight Ruggedized Constructions — 200˚C (Flat Braid)

| AWG Size | Number of Conductors | Shield Size AWG Tin Coated Copper | Maximum Outside Diameter mm (in) | Maximum Weight Kg/Km (lb/1000 ft) | TE Part Number |
|---|---|---|---|---|---|
| 24 | 1 | 38 | 2.13 [.084] | 10.86 [7.3] | 55FBF7129-* |
| 22 | 1 | 38 | 2.31 [.091] | 13.09 [8.8] | 55FBF2512-22-* |
| 20 | 1 | 38 | 2.51 [.099] | 16.67 [11.2] | 55FBF2512-20-* |
| 18 | 1 | 38 | 2.79 [.110] | 22.17 [14.9] | 55FBF2512-18-* |
| 16 | 1 | 38 | 3.02 [.119] | 26.78 [18.0] | 55FBF2512-16-* |
| 14 | 1 | 38 | 3.45 [.136] | 35.86 [24.1] | 55FBF2512-14-* |
| 12 | 1 | 38 | 3.89 [.153] | 49.40 [33.2] | 55FBF2512-12-* |
| 10 | 1 | 38 | 4.55 [.179] | 71.57 [48.1] | 55FBF2512-10-* |
| | | | | | |
| 24 | 2 | 38 | 3.33 [.131] | 19.34 [13.0] | 55FBF7130-* |
| 22 | 2 | 38 | 3.68 [.145] | 23.81 [16.0] | 55FBF2522-22-* |
| 20 | 2 | 38 | 4.09 [.161] | 30.50 [20.5] | 55FBF2522-20-* |
| 18 | 2 | 38 | 4.65 [.183] | 41.37 [27.8] | 55FBF2522-18-* |
| 16 | 2 | 38 | 5.11 [.201] | 50.59 [34.0] | 55FBF2522-16-* |
| 14 | 2 | 38 | 6.02 [.237] | 69.49 [46.7] | 55FBF2522-14-* |
| | | | | | |
| 24 | 3 | 38 | 3.53 [.139] | 25.30 [17.0] | 55FBF7131-* |
| 22 | 3 | 38 | 3.91 [.154] | 31.10 [20.9] | 55FBF2532-22-* |
| 20 | 3 | 38 | 4.34 [.171] | 41.07 [27.6] | 55FBF2532-20-* |
| 18 | 3 | 38 | 4.95 [.195] | 56.54 [38.0] | 55FBF2532-18-* |
| 16 | 3 | 38 | 5.44 [.214] | 69.94 [47.0] | 55FBF2532-16-* |
| 14 | 3 | 38 | 6.43 [.253] | 96.87 [65.1] | 55FBF2532-14-* |
| | | | | | |
| 24 | 4 | 38 | 4.19 [.165] | 31.69 [21.3] | 55FBF7132-* |
| 22 | 4 | 38 | 4.67 [.184] | 39.58 [26.6] | 55FBF2542-22-* |
| 20 | 4 | 38 | 5.23 [.206] | 52.68 [35.4] | 55FBF2542-20-* |
| 18 | 4 | 38 | 5.99 [.236] | 72.91 [49.0] | 55FBF2542-18-* |
| 16 | 4 | 38 | 6.68 [.263] | 91.36 [61.4] | 55FBF2542-16-* |
| 14 | 4 | 38 | 7.85 [.309] | 125.59 [84.4] | 55FBF2542-14-* |
| | | | | | |
| 24 | 5 | 38 | 4.52 [.178] | 37.80 [25.4] | 55FBF7133-* |
| 22 | 5 | 38 | 5.05 [.199] | 47.32 [31.8] | 55FBF2552-22-* |
| 20 | 5 | 38 | 5.66 [.223] | 63.39 [42.6] | 55FBF2552-20-* |
| 18 | 5 | 38 | 6.55 [.258] | 89.43 [60.1] | 55FBF2552-18-* |
| 16 | 5 | 38 | 7.24 [.285] | 111.00 [74.6] | 55FBF2552-16-* |
| 14 | 5 | 38 | 8.53 [.336] | 153.26 [103.0] | 55FBF2552-14-* |

The color of the component wire shall be light yellow designated by 4L.
The designated colors for components shall be light yellow for component 1 and light yellow with stripe designators for remaining component wires as follows:

| Component Wire | 1 | 2 | 3 | 4 | 5 |
|---|---|---|---|---|---|
| Color Designation | 4L | 4L6 | 4L3 | 4L5 | 4L2 |

### Fluid Resistance

| | |
|---|---|
| Fluids | Hydrocarbons |
| | Fuels and lubricants |
| | Alcohols |
| | Cleaning fluids |
| | Glycols |
| | Synthetic fuels and lubricants |
| | Ketones |





Dimensions are shown for reference purposes only. Specifications subject to change.

Dimensions are in millimeters unless otherwise specified.

USA: +1 800 522 6752
Asia Pacific: +86 0 400 820 6015
UK: +44 800 267 666

For additional support numbers please visit www.te.com

## Part Numbering System

**55F B 1 5 2 1- AWG- 7L/7L- 0**

**Jacket Color (code per MIL-STD-681)**
(codes same as for Primary Wire Insulation Color)

**Primary Wire Insulation Color**
(code per MIL-STD-681, except as noted)

| | | | | | | | | |
|---|---|---|---|---|---|---|---|---|
| 0 | - | Black | 5 | - | Green | 9 | - | White |
| 1 | - | Brown | 6 | - | Blue | | | |
| 2 | - | Red | 7 | - | Violet | | | |
| 3 | - | Orange | 7L | - | Light Violet | | | |
| 4 | - | Yellow | 8 | - | Gray | | | |

**Conductor Size (AWG)**

**Conductor Type**
1 - Tin-coated copper
2 - Silver-coated copper
3 - Nickel-coated copper
4 - Silver-coated high strength copper alloy
6 - Nickel-coated high strength copper alloy

**Number of Conductors**
1 through 10 (designator for 10 conductor = 0)

**Class of Wire**
1-3 Discontinued
4 Ruggedized
5 Lightweight ruggedized
6 To be re-assigned

**Construction**
0 - Component wire; or unshielded & unjacketed cable
1 - Round braid shielded and jacketed cable*
2 - Flat braid shielded & uacketed cable
7 - Special constructions

**Product Type:**
A - XL-EFTE (insulation, & cable jacket, if any)
B - Conductive XL-EFTE (cable jacket, black only)
A/ - Outer space 55FA
B/ - Outer space 55FB
AF - Low fluoride 55FA
BF - Low fluoride 55FB
A/F - Outer space, low fluoride 55FA
B/F - Outer space, low fluoride 55FB

**Basic Product Number**



Dimensions are shown for reference purposes only. Specifications subject to change.

Dimensions are in millimeters unless otherwise specified.

USA: +1 800 522 6752
Asia Pacific: +86 0 400 820 6015
UK: +44 800 267 666

For additional support numbers please visit www.te.com

## Cheminax Coaxial Cables

### Small, Lightweight Coaxial Cables

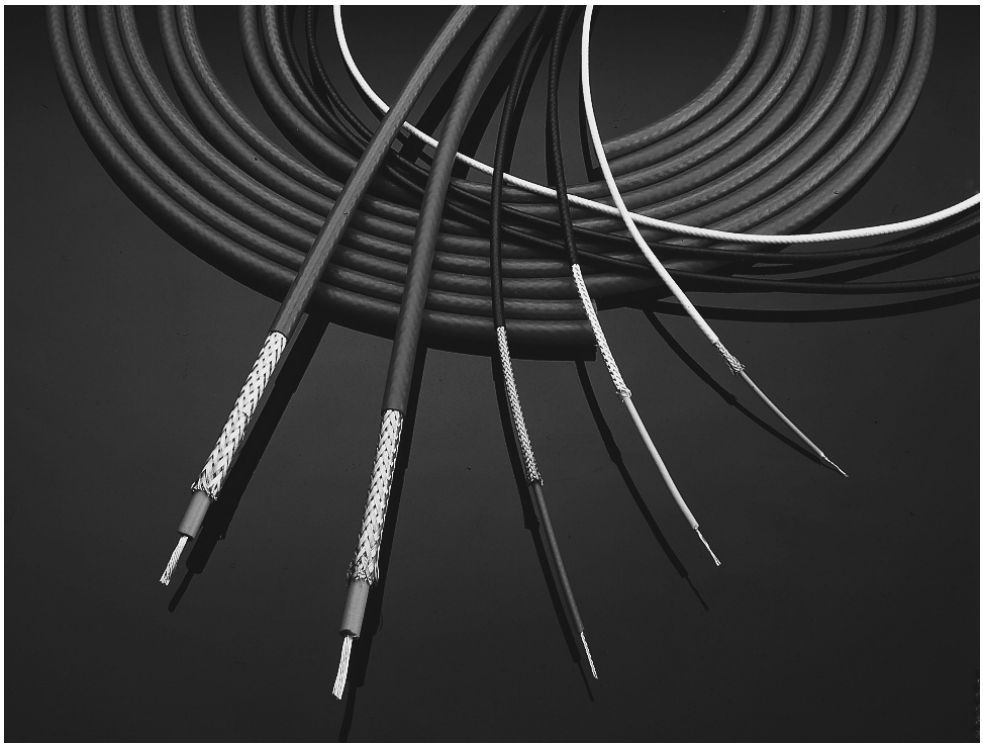

### Product Facts

- Light weight, small size
- Temperature range of -65°C to 200°C [-85°F to 392°F]
- Low capacitance and attenuation
- High velocity of propagation
- High flexibility

### Applications

Cheminax controlled electrical cables are used in the aircraft and aerospace industries. They have a wide range of applications in missiles, avionics, radio-frequency and microwave systems, computers, security and surveillance systems, and communications.

Cheminax coaxial cables were designed to solve interconnect problems in electronic systems, such as computers, military equipment, and other areas of high-density packing, where cables are required to perform to more exacting specifications than standard radio-grade (RG) constructions.

TE's advanced materials technology has allowed the design and development of Cheminax miniature coaxial cables that offer substantial savings in size and weight while improving mechanical performance and reducing attenuation.

Cables can be designed that are either smaller and lighter than standard RG cables or provide significantly lower attenuation and capacitance with no significant increase in size.

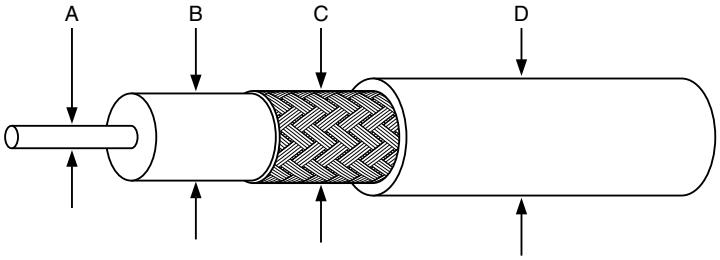


**A** Conductor
**B** Dielectric
**C** Shield
**D** Jacket

| Available in: | Americas | Europe | Asia Pacific |
|---|---|---|---|
| | ■ | ■ | ■ |





Catalog 1654025
Revised 3-13

www.te.com

Dimensions are shown for reference purposes only. Specifications subject to change.

Dimensions are in millimeters unless otherwise specified.

USA: +1 800 522 6752
Asia Pacific: +86 0 400 820 6015
UK: +44 800 267 666

For additional support numbers please visit www.te.com

## Cheminax Coaxial Cables (Continued)

### Part Numbering System

| 95 | 27 | A | 1 | 3 | 1 | 7 | - | 0 |
|---|---|---|---|---|---|---|---|---|
| XX | XX | X | X | X | X | X | - | X |

**Example: 9527A1317-0**

**Jacket Color Identification Code**

| | | |
|---|---|---|
| 0 - Black | 4 - Yellow | 8 - Gray |
| 1 - Brown | 5 - Green | 9 - White |
| 2 - Red | 6 - Blue | 9X - Translucent White |
| 3 - Orange | 7 - Violet | X - Clear |

**Conductor Type**

1 - Tin-coated copper
2 - Silver-coated copper
3 - Nickel-coated copper
4 - Silver-coated high strength copper alloy
5 - Aluminum
6 - Nickel-coated high strength copper alloy
7 - Tin-coated copper-clad steel
8 - Silver-coated copper-clad steel
9 - Bare copper
0 - Other
A - Silver-coated CS95

**Dielectric Material**

| | |
|---|---|
| 1 - Rayfoam L (Polyethylene) | 6 - Modified XL-ETFE (SPEC 55) |
| 2 - Rayfoam H (Foamed FEP) | 7 - Flex XL-ETFE |
| 3 - Rayolin F (Solid) | 8 - Rayfoam M (Foamed MFA) |
| 4 - Modified FEP (Solid) | 0 - Other |

**Outer Jacket Material**

| | |
|---|---|
| 1 - General purpose PVF² | 6 - Modified XL-ETFE (SPEC 55) |
| 2 - Outerspace PVF² | 7 - Flex XL-ETFE (SPEC 80) |
| 3 - Thermorad F & S | 8 - Zerohal & Thermorad Low Smoke |
| 4 - Modified FEP | 9 - None |
| 5 - ETFE (Uncrosslinked) | 0 - Other |

**Construction**

| | |
|---|---|
| 1 - Round braid | 6 - Triax - other |
| 2 - Flat braid | 7 - Other |
| 3 - 2 round braids | 8 - Composite shield |
| 4 - 2 shields (other) | 9 - Core only |
| 5 - Triax-round braids | 0 - Other |

**Variation**

| | |
|---|---|
| A - Standard | U - Low Loss |
| B - Sequential within any PNs | W - Waterblocked |
| S - Outer Space Requirements | |

**Conductor Size (AWG)**

Always 2 digits - 0X if under 10 AWG

**Impedance**

Always 2 digits - last 2 digits if over 100 ohms
0X (1 digit) if under 10 ohms

**Part Numbering System is a cross reference only and not meant for part creation.**



Dimensions are shown for reference purposes only. Specifications subject to change.

Dimensions are in millimeters unless otherwise specified.

USA: +1 800 522 6752
Asia Pacific: +86 0 400 820 6015
UK: +44 800 267 666

For additional support numbers please visit www.te.com

## Cheminax Coaxial Cables (Continued)

### Specifications/Approvals

| Series | TE |
|---|---|
| Cheminax cables | 1200 |

### Product Dimensions (Nominal)

| Typical Product Part No. | Impedance (ohms) | Capacitance pF/m (pF/ft) | Attenuation at 400 MHz dB/100m (dB/100 ft) | A Conductor Diameter | B Dielectric Diameter | C Shield Diameter | D Jacket Diameter | Weight in kg/km (lb/1000ft) |
|---|---|---|---|---|---|---|---|---|
| 5012E1339 | 50 | 98.4 [30.0] | 14.8 [4.5] | 2.26 [.089] | 7.24 [.285] | 7.98 [.314] | 10.24 [.403] | 162.2 [109.0] |
| 5012M1612 | 50 | 82.0 [25.0] | 16.1 [4.9] | 2.26 [.089] | 6.07 [.239] | 6.60 [.260] | 7.06 [.278] | 74.5 [50.1] |
| 5024A1311 | 50 | 83.7 [25.5] | 50.3 [15.3] | 0.62 [.025] | 1.70 [.067] | 2.18 [.085] | 2.67 [.104] | 11.8 [7.9] |
| 5026D1027 | 50 | 88.9 [27.1] | 63.7 [19.4] | 0.48 [.019] | 1.27 [.050] | 1.70 [.067] | 2.21 [.087] | 11.8 [7.9] |
| 5030A1317 | 50 | 90.2 [27.5] | 97.5 [29.7] | 0.30 [.012] | 0.79 [.031] | 1.12 [.044] | 1.57 [.062] | 4.5 [3.0] |
| 5030A1424 | 50 | 100.4 [30.6] | 94.5 [28.8] | 0.30 [.012] | 0.86 [.034] | 1.19 [.047] | 1.60 [.063] | 5.7 [3.8] |
| 7520A1311 | 75 | 56.1 [17.1] | 20.0 [6.1] | 1.02 [.040] | 4.57 [.180] | 5.11 [.201] | 6.12 [.241] | 43.2 [29.0] |
| 7524A1311 | 75 | 56.4 [17.2] | 31.8 [9.7] | 0.62 [.025] | 2.82 [.111] | 3.25 [.128] | 3.86 [.152] | 19.2 [12.9] |
| 7528H1424 | 75 | 54.5 [16.6] | 44.0 [13.4] | 0.32 [.013] | 1.37 [.054] | 1.73 [.068] | 2.13 [.084] | 8.9 [6.0] |
| 7530A1317 | 75 | 60.4 [18.3] | 58.8 [17.9] | 0.30 [.012] | 1.35 [.053] | 1.78 [.07] | 2.29 [.09] | 8.3 [5.6] |
| 7530H1424 | 75 | 57.4 [17.5] | 58.1 [17.7] | 0.30 [.012] | 1.30 [.051] | 1.73 [.068] | 2.03 [.08] | 8.5 [5.7] |
| 9522A1311 | 95 | 44.3 [13.5] | 19.7 [6.0] | 0.79 [.031] | 5.51 [.217] | 6.05 [.238] | 7.32 [.288] | 55.1 [37.0] |
| 9527J1528 | 95 | 44.3 [13.5] | 31.8 [9.7] | 0.43 [.017] | 2.84 [.112] | 3.18 [.125] | 3.58 [.141] | 19.2 [12.9] |
| 9530H1014 | 95 | 44.3 [13.5] | 44.3 [13.5] | 0.30 [.012] | 1.83 [.072] | 2.26 [.089] | 2.62 [.103] | 13.1 [8.8] |

Note: All values are nominal.

### Product Characteristics

| | | |
|---|---|---|
| General | Conductor Range<br>Operating Temperature Range* | 12 AWG to 30 AWG<br>-65°C to 200°C [-85°F to 392°F] |
| Electrical | Impedance range<br>Dielectric constant<br>Velocity of propagation | 50 ohms to 125 ohms<br>1.65–2.3<br>67%–80% |

*Temperature rating varies depending on materials used in specific construction.

## Small, Lightweight Coaxial Cables

### Properties (per SCD)

| Physical | Typical Value of Dielectric Material | | |
|---|---|---|---|
| | Rayfoam L | Rayfoam H | Rayolin F |
| Tensile (min.) | 6.8 MPa (1000 psi) | 4.1 MPa (600 psi) | 12.2 MPa (1800 psi) |
| Elongation (min.) | 50% | 50% | 200% |
| **Electrical** | | | |
| Dielectric withstand (min.) | 1000 V | 1000 V | 1000 V |
| Velocity of propagation (nom.) | 78% | 78% | 67% |
| Dielectric constant | 1.65 | 1.65 | 2.2 |

| Physical | Type Value of Jacket Material | | | | | |
|---|---|---|---|---|---|---|
| | Thermorad | SPEC 55 | FlexLine | FEP | Zerohal | SPEC 44 |
| Tensile (min.) | 13.6 MPa (2000 psi) | 34 MPa (5000 psi) | 20.4 MPa (3000 psi) | 13.6 MPa (2000 psi) | 8.2 MPa (1200 psi) | 27.2 MPa (2500 psi) |
| Elongation (min.) | 250% | 50% | 100% | 200% | 150% | 150% |
| Temperature (max.) | 125°C [257°F] | 200°C [392°F] | 200°C [392°F] | 200°C [392°F] | 125°C [257°F] | 150°C [302°F] |
| Flammability* | Method C | Method B | Method B | Method B | Method B | Method B |
| Fluid category | C | A | A | A | C | B |

*See TE specification WCD-1200 for details.

### Solvents

| Fluid category | A | B*** | C |
|---|---|---|---|
| Fluid resistance | All | Hydrocarbons | Hydrocarbons 50˚C |
| | | All fuels and lubes | Petroleum base fuels and lubes ≤50˚C |
| | | Alcohols | Alcohols |
| | | Cleaning fluids | Cleaning fluids |
| | | Glycois | Synthetic fuels and lubes |
| | | | Glycols |
| | | | Ketones |

**Test method per TE Specification 1200.
***Use caution with ketones.







Dimensions are shown for reference purposes only. Specifications subject to change.

Dimensions are in millimeters unless otherwise specified.

USA: +1 800 522 6752
Asia Pacific: +86 0 400 820 6015
UK: +44 800 267 666

For additional support numbers please visit www.te.com

## Cheminax — High Performance Alternatives to Standard Cables (Continued)

### TE Alternatives to RG Cables

| RG/U | TE Alternative | Comments |
|---|---|---|
| 4 | 5020A3311-0 | Small/light |
| | 5018D3311-0 | Improved electricals |
| 5 | 5018D3311-0 | Small/light |
| 8 | 5012E1339-0 | Dimensionally similar |
| 11 | 7518A1311-0 | Small/light |
| 29 | 5020A1311-0 | Small/light |
| 31 | 5012E1339-0 | Dimensionally similar |
| 55 | 5020A3311-0 | Small/light |
| | 5018D3311-0 | Improved electricals |
| 58 | 5021D1331-0 | Dimensionally similar |
| | 5020A1311-0 | Small/light |
| | 5018A1311-0 | Improved electricals |
| 59 | 7523D1331-0 | Dimensionally similar |
| | 7524A1311-0 | Small/light |
| | 7520A1311-0 | Improved electricals |
| 62 | 9524A1311-0 | Small/light |
| 63 | 2524A1311-0 | Small/light |
| 87 | 5012A3311-0 | Small/light |
| 89 | 5012A3311-0 | Small/light |
| 115 | 5012A3311-0 | Small/light |
| 122 | 5020A1311-0 | Improved electricals |
| 124 | 7524A1311-0 | Small/light |
| 133 | 9524A1311-0 | Small/light |
| 140 | 7524A1311-0 | Small/light |
| 141 | 5020A1311-0 | Small/light |
| 142 | 5019D3318-0 | Small/light |
| | 5018D3311-0 | Improved electricals |
| 144 | 7518A1311-0 | Small/light |
| 149 | 7518A1311-0 | Small/light |

| RG/U | TE Alternative | Comments |
|---|---|---|
| 159 | 5020A1311-0 | Small/light |
| 174 | 5026A1311-0 | Small/light |
| | 5024A1311-0 | Improved electricals |
| 178 | 5030A1317-0 | Small/light |
| | 5028A1317-0 | Improved electricals |
| 179 | 7530A1317-0 | Small/light |
| | 7528A1317-0 | Improved electricals |
| 180 | 9530E1014-0 | Small/light |
| | 9527A1318-9 | Improved electricals |
| 188 | 5026A1311-0 | Small/light |
| | 5024A1311-0 | Improved electricals |
| 210 | 9524A1311-0 | Small/light |
| 213 | 5012E1339-0 | Dimensionally similar |
| 214 | 5012A3311-0 | Small/light |
| 223 | 5019D3318-0 | Small/light |
| | 5018D3311-0 | Improved electricals |
| 225 | 5012A3311-0 | Small/light |
| 235 | 5012A3311-0 | Small/light |
| 279 | 7524A1311-0 | Dimensionally similar |
| 282 | 5024A1311-0 | Small/light |
| 302 | 7524A1311-0 | Small/light |
| 303 | 5020A1311-0 | Small/light |
| 304 | 5018A1311-0 | Small/light |
| 316 | 5026A1311-0 | Small/light |
| | 5024A1311-0 | Improved electricals |
| 393 | 5012A3311-0 | Small/light |
| 400 | 5020A3311-0 | Small/light |
| | 5018D3311-0 | Improved electricals |
| 403 | 5030A5314-0 | Small/light |

Note: To complement the mechanical and electrical features of Cheminax miniature coax cable, TE offers SolderSleeve, SolderTacts, and PinPak termination devices and RF connector devices. Controlled electrical cables and components are available for data bus systems.



Dimensions are shown for reference purposes only. Specifications subject to change.

Dimensions are in millimeters unless otherwise specified.

USA: +1 800 522 6752
Asia Pacific: +86 0 400 820 6015
UK: +44 800 267 666

For additional support numbers please visit www.te.com

## Cheminax Twin Axial Cable

### Small, Lightweight Twin Axial Cables

### Product Facts

- Light weight, small size
- Temperature range of -65°C to 200°C [-85°F to 392°F]
- Low capacitance
- High data rates
- Excellent shop handling

### Applications

These small, lightweight cables are specially designed for use in MIL-STD-1553 CANBUS, and other high speed data bus applications. TE materials technology allows the design and construction of cables that meet rigorous electrical and environmental performance requirements while minimizing size and weight.

Cheminax twin axial cables provide elegant solutions to an increasing range of data bus and multiplex signal transmission applications.

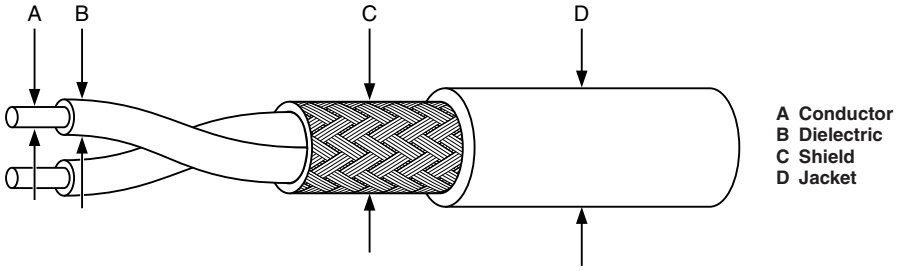


| Available in: | Americas | Europe | Asia Pacific |
|---|---|---|---|
| | ■ | ■ | ■ |







Dimensions are shown for reference purposes only. Specifications subject to change.

Dimensions are in millimeters unless otherwise specified.

USA: +1 800 522 6752
Asia Pacific: +86 0 400 820 6015
UK: +44 800 267 666

For additional support numbers please visit www.te.com

## Cheminax Twin Axial Cables (Continued)

### Specifications/Approvals

| Series | TE |
|---|---|
| Cheminax cables | 1200 |

### Product Dimensions*

| Typical Product Part No. | Impedance (ohms) | Capacitance pF/m(pF/ft) | A Conductor Diameter | B Dielectric Diameter | C Shield Diameter | D Jacket Diameter | Weight in kg/km (lb/1000ft) |
|---|---|---|---|---|---|---|---|
| 5024A1661 | 50 | 104.7 [31.9] | .64 [.025] | 0.89 [.035] | 2.21 [.087] | 2.62 [.103] | 14.4 [9.7] |
| 5026A1664 | 50 | 136.2 [41.5] | .48 [.019] | 0.66 [.026] | 1.75 [.069] | 2.16 [.085] | 10.0 [6.7] |
| 7520A1662 | 75 | 74.2 [22.6] | 1.02 [.040] | 2.03 [.080] | 4.60 [.181] | 5.05 [.199] | 42.9 [28.8] |
| 7526J1660 | 75 | 88.6 [27.0] | .48 [.019] | 0.99 [.039] | 2.41 [.095] | 2.82 [.111] | 14.9 [10.0] |
| 7820D0331 | 78 | 67.3 [20.5] | 1.02 [.040] | 2.11 [.083] | 4.75 [.187] | 5.72 [.225] | 46.9 [31.5] |
| 7824E0422 | 78 | 55.1 [16.8] | .64 [.025] | 1.19 [.047] | 2.82 [.111] | 3.33 [.131] | 19.6 [13.2] |
| 0022E0311 | 100 | 49.2 [15.0] | .79 [.031] | 1.98 [.078] | 4.39 [.173] | 5.16 [.203] | 30.5 [20.5] |
| 0024A0024 | 100 | 44.3 [13.5] | .64 [.025] | 1.30 [.051] | 3.02 [.119] | 3.63 [.143] | 25.1 [16.9] |
| 0026A0024 | 100 | 44.0 [13.4] | .48 [.019] | 1.14 [.045] | 2.72 [.107] | 3.23 [.127] | 18.7 [12.6] |
| 2524H0524 | 125 | 39.4 [12.0] | .64 [.025] | 1.83 [.072] | 4.09 [.161] | 4.50 [.177] | 25.3 [17.7] |
| 2526E1114 | 125 | 36.1 [11.0] | .48 [.019] | 1.40 [.055] | 3.33 [.131] | 3.73 [.147] | 21.7 [14.6] |
| 2530A0314 | 125 | 39.4 [12.0] | .30 [.012] | 0.86 [.034] | 2.16 [.085] | 2.67 [.105] | 10.6 [7.1] |
| 10595-24 | 70 | 91.9 [28.0] | .64 [.025] | 1.19 [.047] | 2.82 [.111] | 3.23 [.127] | 17.9 [12.0] |
| 10606-26 | 75 | 91.9 [28.0] | .53 [.021] | 0.99 [.039] | 2.41 [.095] | 2.82 [.111] | 13.4 [9.0] |
| 10612-24 | 77 | 91.9 [28.0] | .64 [.025] | 1.22 [.048] | 2.90 [.114] | 3.30 [.130] | 23.7 [15.9] |
| 10613-24 | 77 | 91.9 [28.0] | .64 [.025] | 1.22 [.048] | 3.33 [.131] | 3.73 [.147] | 39.0 [26.2] |
| 10614-24 | 77 | 91.9 [28.0] | .64 [.025] | 1.22 [.048] | 3.73 [.147] | 4.09 [.161] | 40.3 [27.1] |

*All dimensions are nominal.

### Small, Lightweight Twin Axial Cables

#### Product Characteristics

| | | |
|---|---|---|
| General | Conductor range<br>Operating temperature range* | 20 AWG to 30 AWG<br>-65°C to 200°C [-85°F to 392°F] |
| Electrical | Impedance range<br>Capacitance range | 50 ohms to 125 ohms<br>30 pF/ft to 10 pF/ft |

*Temperature rating varies depending on materials used in specific construction.

#### Properties (per SCD)

| Physical | Typical Value of Dielectric Material | | | | |
|---|---|---|---|---|---|
| | Rayfoam L | Rayfoam H | Rayolin F | FEP (solid) | Radiation-Crosslinked XL ETFE |
| Tensile (min.) | 6.8 MPa (1000 psi) | 9.1 MPa (600 psi) | 12.2 MPa (1800 psi) | 6.8 MPa (1000 psi) | 34 MPa (5000 psi) |
| Elongation (min.) | 50% | 50% | 200% | 150% | 50% |
| **Electrical** | | | | | |
| Dielectric withstand (min.) | 1000 V | 1000 V | 1000 V | 1000 V | 1000 V |
| Velocity of propagation (nom.) | 78% | 78% | 67% | 69% | 61% |
| Permitivity (nom.) | 1.65 | 1.65 | 2.2 | 2.1 | 2.7 |

| Physical | Typical Value of Jacket Material | | | | | |
|---|---|---|---|---|---|---|
| | Thermorad | SPEC 55 | FlexLine | FEP | Zerohal | SPEC 44 |
| Tensile (min.) | 13.6 MPa (2000 psi) | 34 MPa (5000 psi) | 20.4 MPa (3000 psi) | 13.6 MPa (2000 psi) | 8.2 MPa (1200 psi) | 27.2 MPa (2500 psi) |
| Elongation (min.) | 250% | 50% | 100% | 200% | 150% | 150% |
| Temperature (max.) | 125°C [257°F] | 200°C [392°F] | 200°C [392°F] | 200°C [392°F] | 125°C [257°F] | 150°C [302°F] |
| Flammability* | Method C | Method B | Method B | Method B | Method B | Method B |
| Fluid category* | C | A | A | A | C | B |

*See solvent Page 9-79 for details.



Catalog 1654025
Revised 3-13

www.te.com

Dimensions are shown for reference purposes only. Specifications subject to change.

Dimensions are in millimeters unless otherwise specified.

USA: +1 800 522 6752
Asia Pacific: +86 0 400 820 6015
UK: +44 800 267 666

For additional support numbers please visit www.te.com

## SeaLAN Ethernet Cables

### Product Facts

- **Low smoke, zero halogen**
- **Waterblocked cables tested using ASTM D1411 sea water solution**
- **Humidity resistant designs**
- **Lightweight**
- **Flexible**

### Applications

TE SeaLAN family of waterblocked and non-waterblocked Ethernet cables, as described in MIL-DTL-24643/59 through /61, are qualified to meet the rigorous requirements of flammability, smoke emissions and halogen content. Waterblocked constructions meet severe waterblocking and humidity resistance requirements.

Cables are used in Ethernet applications for:

- Military vessels MIL-DTL-24643/59, /60 and /61
- Freighters
- Tankers
- Cruise Ships

| Available in: | Americas | Europe | Asia Pacific |
|---|---|---|---|
| | ■ | ■ | ■ |





Catalog 1654025
Revised 3-13

www.te.com

Dimensions are shown for reference purposes only. Specifications subject to change.

Dimensions are in millimeters unless otherwise specified.

USA: +1 800 522 6752
Asia Pacific: +86 0 400 820 6015
UK: +44 800 267 666

For additional support numbers please visit www.te.com

## SeaLAN Ethernet Cables (Continued)

### Product Offering

| MIL Spec Part Description | Type | TE Description | Cable Description |
|---|---|---|---|
| M24643/59-01UO | LSC5FS-4 | CEC-RWC-18982 | 24 AWG, solid bc, Al/polyester and drain wire |
| M24643/59-02UO | LSC5FSW-4 | CEC-RWC-18983 | Waterblocked, 24 AWG, solid bc, Al/polyester and drain wire |
| M24643/59-03UO | LSC5OS-4 | CEC-RWC-18700 | 24 AWG, solid bc, Al/polyester and woven braid |
| M24643/59-04UO | LSC50SW-4 | CEC-RWC-18600 | Waterblocked, 24 AWG, solid bc, Al/polyester and woven braid |
| M24643/60-01UN | LSC5-4 | CEC-RWC-18709 | 24 AWG, solid bc |
| M24643/60-02UN | LSC5W-4 | CEC-RWC-18710 | Waterblocked, 24 AWG, solid bc |
| M24643/61-01UN | LSC5P-4 | CEC-RWC-19043 | 24 AWG, stranded tc |
| M24643/61-02UD | LSC5POS-4 | CEC-RWC-18886 | 24 AWG, stranded tc, Al/polyester and woven braid |
| M24643/61-03UD | LSC5POSR-4 | CEC-RWC-19172 | 26 AWG, stranded tc, Al/polyester and woven braid |

### Cable Constructions

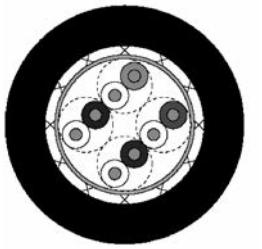

CEC-RWC-18700

CEC-RWC-18600

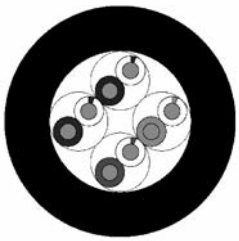

CEC-RWC-18709



Dimensions are shown for reference purposes only. Specifications subject to change.

Dimensions are in millimeters unless otherwise specified.

USA: +1 800 522 6752
Asia Pacific: +86 0 400 820 6015
UK: +44 800 267 666

For additional support numbers please visit www.te.com

## SHF-260 Highly Flexible Wire

### Product Facts

- **Currently available in sizes from 24 to 1/0 AWG**
- **Highly flexible small bend radius allows for fitting into complex routing**
- **Extreme temperature resistance for a wide range of applications**
- **Extruded polymer notch and abrasion resistant — mechanically tough**
- **Chemical and fluid resistance when tested to SAE-AS-22759/41**
- **Vibration stability allows a long life cycle in engine compartments**

TE Connectivity is pleased to announce the introduction of its new SHF-260 highly flexible wire. The need for a combination of high temperature and high performance in wire insulation has become a critical factor in today's platforms. This is especially true in large diameter power feeder applications where temperature and durability are key.

Its highly flexible characteristic allows the cable to be bent and routed in extremely tight areas with no wrinkling or cracking of the insulation.This results in being able to run shorter distances, reducing the stresson the contact, and reducing the mating and demating forces normally associated with large shell diameter circular connectors, such as MIL-C-5015 and MIL-C-83723 connectors.

Its ability to route in tight spaces may allow the user to go "up" in AWG sizes and eliminate the need to split power, where routing and bending previously prevented the user from doing so.

### Applications

Typical uses include both primary and secondary power distribution aerospace, defense and marine applications where high amperage pass through is needed

### Materials

Fluoropolymer based material

### Standards & Specifications

TE Specification WCD3111

Application Spec SAE-AS-22759ASTM D1868FAR Part 25 - Flammability

### Ordering Information

Contact TE

### Thermal Properties

Temperature Rating:
-65˚C to +260˚C

Life Cycle:
290˚C for 500 hours

Cold Bend:
-65˚C for 4 hours

Thermal Shock Resistance:
Accordance with ASS22759 using an oven temperature of 260˚C

### Physical Properties

Weight and Dimensions:
See TE Specification Control Drawings

Insulation Elongation:
150% elongation minimum

Tensile Strength:
2000 lbf/inch$^2$ minimum

Minimum Bend Radius:
290˚C for 500 hours around a mandrel having a diameter as specified in the applicable specification sheet

Wrap Test:
Accordance with ASS22759 using an oven temperature of 290˚C

### Fire Hazard Properties

Flammability – 60˚ Flame:
Exceeds test requirements

Smoke:
Smoke resistance test specified in ASS22759 using an oven temperature of 290˚C

### Electrical Properties

Voltage:
1000 volts (rms)

Insulation Resistance:
Minimum 50,000 Mohms/kft

### Wire Printing

UV Laser Marking:
Excellent mark contrast





Catalog 1654025
Revised 3-13

www.te.com

Dimensions are shown for reference purposes only. Specifications subject to change.

Dimensions are in millimeters unless otherwise specified.

USA: +1 800 522 6752
Asia Pacific: +86 0 400 820 6015
UK: +44 800 267 666

For additional support numbers please visit www.te.com

## Raychem MIL-DTL-24643 ZEROHAL PROFIBUS Cables

### Product Facts

- **MIL-DTL-24643/62 qualified**
- **Waterblocked and non-waterblocked constructions**
- **Meets water tightness requirements when tested with ASTM D1411 synthetic sea water solution**
- **Suitable for transmission rates up to 12 megabits**
- **per second (MBits/S)**
- **Compatible with commercially available Profibus connectors**

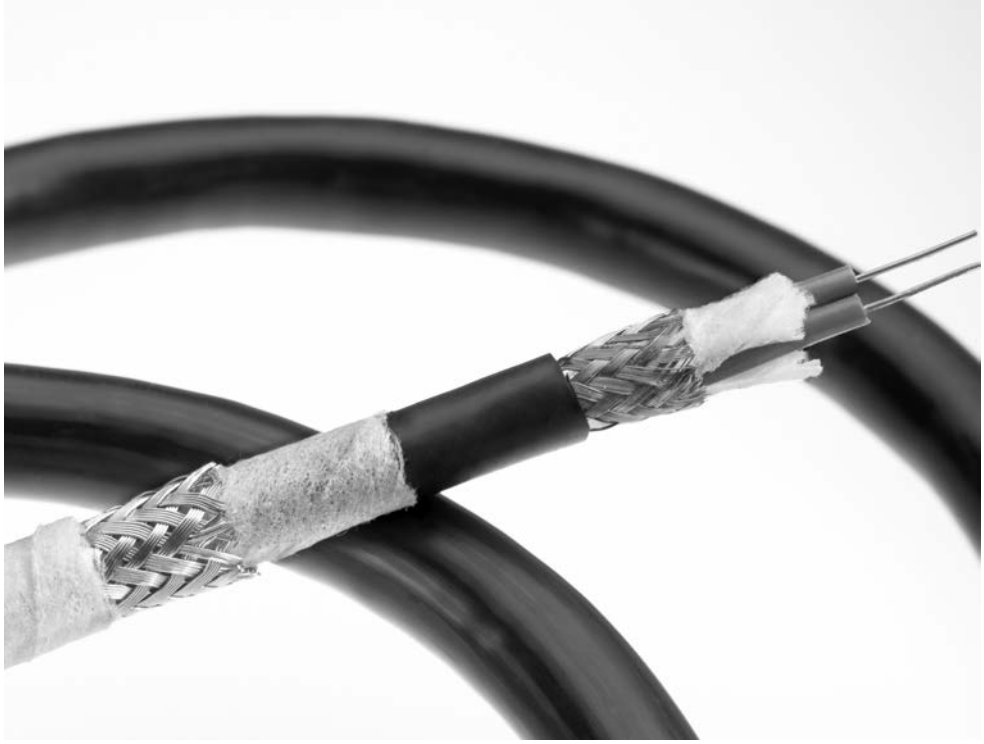

MIL-DTL-24643 has been the governing specification for low smoke, zero halogen insulated and jacketed shipboard cables used by the United States Navy and other military marine applications.

TE RAYCHEM brand ZEROHAL cables meeting the PROFIBUS standard as described in MIL-DTL-24643/62, are qualified to meet the rigorous requirements to flame, smoke emissions, halogen content and severe water-blocking requirements.

### Applications

Cables are used in communications, machinery control monitoring and instrumentation for:

- Military vessels - MIL-DTL-24643/62
- Cruise ships
- Freighters
- Tankers
- Industrial Automation

### Electrical

150 ohm impedance

Transmission rates up to 12 MBits/s

Attenuation (dB/100m maximum)

| | |
|---|---|
| 2 MHz: | 1.0 dB |
| 4 MHz: | 2.5 dB |
| 16 MHz: | 5.0 dB |
| 100 MHz: | 13.5 dB |
| 300 MHz: | 24.0 dB |

### Materials

Foamed polyethylene components

Low smoke, Zerohal jacket

### Standards & Specs

Raychem Specification 1200

Raychem Specification

345 MIL-DTL-26463/62

| Available in: | Americas | Europe | Asia Pacific |
|---|---|---|---|
| | ■ | ■ | ■ |



Catalog 1654025
Revised 3-13

www.te.com

Dimensions are shown for reference purposes only. Specifications subject to change.

Dimensions are in millimeters unless otherwise specified.

USA: +1 800 522 6752
Asia Pacific: +86 0 400 820 6015
UK: +44 800 267 666

For additional support numbers please visit www.te.com

## Raychem MIL-DTL-24643 ZEROHAL PROFIBUS Cables (Continued)

### Product Offering

| Military Part Number | Type | TE Part Number | Description |
|---|---|---|---|
| M24643/62-01 | LSPB2SD-1 | 5022M1809 | 22 AWG, bare copper, non-water blocked, shield and jacket |
| M24643/62-02 | LSPB2SDW-1 | 5022W1809 | 22 AWG, bare copper, water blocked, shield and jacket |
| M24643/62-03 | LSPB2SDOS-1 | 5022M5809 | 22 AWG, bare copper, non-water blocked, two shields and two jackets |
| M24643/62-04 | LSPB2SDOSW-1 | 5022W0809 | 22 AWG, bare copper, water blocked, two shields and two jackets |

### Cable Constructions

**5022M1809**

**5022M5809**

**5022W0809**

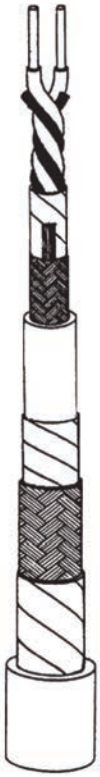

**5022W1809**

Dimensions are shown for reference purposes only. Specifications subject to change.

Dimensions are in millimeters unless otherwise specified.

USA: +1 800 522 6752
Asia Pacific: +86 0 400 820 6015
UK: +44 800 267 666

For additional support numbers please visit www.te.com

## QUADLITE Quadraxial Cables

### Product Facts

- 100 Ohm and 150 Ohm cables
- Materials rated from -65˚C to +200˚C [ -85˚F to +392˚F]
- Low outgassing materials (PTFE, FEP)
- Custom design capabilities
- Proven technologies and materials
- Lightweight
- Low smoke and low toxicity
- Available in 150˚C and 200˚C rated construction

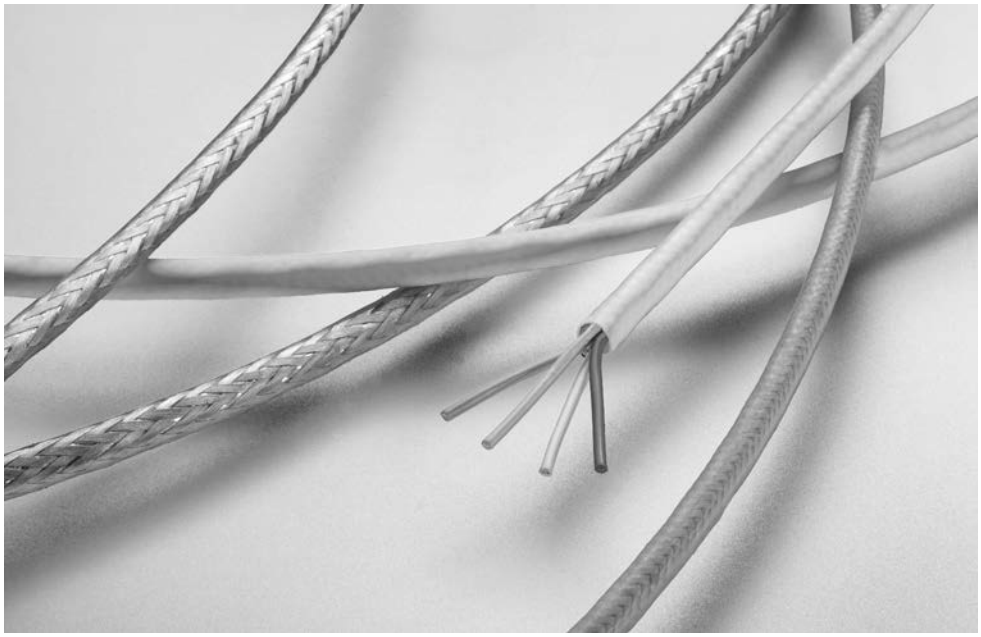

TE Quadlite family of lightweight, fluoropolymer cables are for use in high speed, high bandwidth applications such as 100Base-T, Gigabit Ethernet, IEEE 1394 and Fiber Channel employed in commercial avionics systems, aircraft data networks, in-flight entertainment systems and military communications.

The Quadlite cables are designed to meet the flammability requirements of FAR Part 25 and the rigorous smoke and toxicity requirements found in commercial aerospace standards such as EN3475.

Quadlite cables are to be used with the Quadrax contacts and connectors.

### Applications

Cables are used in communications, control and instrumentation for:

- In-Flight Entertainment
- Satellite TV
- Flight Subsystems
- Military Communications

### Materials

**Dielectrics** — Foamed FEP

**Jacket** — FEP

### Standards and Specifications

TE Specification 1200

ANSI/TIA-568-B.2

IEEE 1394

ARINC 664

| Available in: | Americas | Europe | Asia Pacific |
|---|---|---|---|
| | ■ | ■ | ■ |



Catalog 1654025
Revised 3-13

www.te.com

Dimensions are shown for reference purposes only. Specifications subject to change.

Dimensions are in millimeters unless otherwise specified.

USA: +1 800 522 6752
Asia Pacific: +86 0 400 820 6015
UK: +44 800 267 666

For additional support numbers please visit www.te.com

## QUADLITE Quadraxial Cables (Continued)

**100 Base T Ethernet Cables**
**100 Ohms - 150˚C**

| TE Part Number | CEC-RWC-18634 | | CEC-RWC-18664 | | CEC-RWC-18666 | |
|---|---|---|---|---|---|---|
| Conductor AWG Size (19 Strand) | 26 | | 24 | | 22 | |
| Conductor Material: | SCCA | | SCCA | | SCC | |
| Nom. Conductor Diameter (in.): | 0.0185 | | 0.0235 | | 0.0295 | |
| Insulation Material: | Formed FEP | | Formed FEP | | Formed FEP | |
| Nom. Insulation OD± 0.002 (in.): | 0.037 | | 0.042 | | 0.057 | |
| Nom. Cable OD (in.): | 0.145 | | 0.154 | | 0.195 | |
| Nom. Cable Weight (lbs/1 kft): | 17.7 | | 20.3 | | 32.0 | |
| Shield Material: | TCC | | TCC | | TCC | |
| Jacket Material: | FEP | | FEP | | FEP | |
| Impedance ± 10% (Ω): | 100 | | 100 | | 100 | |
| Temp. Rating: | 150˚C | | 150˚C | | 150˚C | |
| Nom. Capacitance (pF/ft): | 13.5 | | 13.0 | | 12.9 | |
| Nom. Attenuation (dB/100 m): | | | | | | |
| 1 MHz | 4.0 | | 2.2 | | 1.6 | |
| 10 MHz | 10.5 | | 6.8 | | 5.9 | |
| 100 MHz | 36.0 | | 24.8 | | 21.0 | |
| | 10 MHz | 100 MHz | 10 MHz | 100 MHz | 10 MHz | 100 MHz |
| Min. NEXT (dB) | 50 | 35 | 50 | 35 | 50 | 35 |
| Min. SRL (dB) | 23 | 16 | 23 | 16 | 23 | 16 |

| TE Part Number | CEC-RWC-20555 | | CEC-RWC-20333 | |
|---|---|---|---|---|
| Conductor AWG Size (19 Strand) | 26 | | 24 | |
| Conductor Material: | SCCA | | SCCA | |
| Nom. Conductor Diameter (in.): | 0.0185 | | 0.0235 | |
| Insulation Material: | Formed FEP | | Formed FEP | |
| Nom. Insulation OD± 0.002 (in.): | 0.037 | | 0.042 | |
| Nom. Cable OD (in.): | 0.144 | | 0.153 | |
| Nom. Cable Weight (lbs/1 kft): | 18.7 | | 22.2 | |
| Shield Material: | TCC | | TCC | |
| Jacket Material: | FEP | | FEP | |
| Impedance ± 10% (Ω): | 100 | | 100 | |
| Temp. Rating: | 150˚C | | 150˚C | |
| Nom. Capacitance (pF/ft): | 13.5 | | 13.0 | |
| Nom. Attenuation (dB/100 m): | | | | |
| 1 MHz | 4.0 | | 2.2 | |
| 10 MHz | 10.5 | | 6.8 | |
| 100 MHz | 36.0 | | 24.8 | |
| | 10 MHz | 100 MHz | 10 MHz | 100 MHz |
| Min. NEXT (dB) | 50 | 35 | 50 | 35 |
| Min. SRL (dB) | 23 | 16 | 23 | 16 |

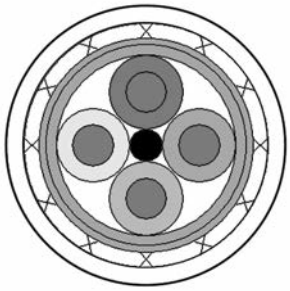

**100BASE-T Ethernet**







Dimensions are shown for reference purposes only. Specifications subject to change.

Dimensions are in millimeters unless otherwise specified.

USA: +1 800 522 6752
Asia Pacific: +86 0 400 820 6015
UK: +44 800 267 666

For additional support numbers please visit www.te.com

## QUADLITE Quadraxial Cables (Continued)

**100 Base T Ethernet Cables**
**100 Ohms - 200˚C**

| TE Part Number | CEC-RWC-18658 | | CEC-RWC-18687 | | CEC-RWC-18665 | |
|---|---|---|---|---|---|---|
| Conductor AWG Size (19 Strand) | 26 | | 24 | | 22 | |
| Conductor Material: | SCCA | | SCCA | | SCC | |
| Nom. Conductor Diameter (in.): | 0.0185 | | 0.0235 | | 0.0295 | |
| Insulation Material: | Formed FEP | | Formed FEP | | Formed FEP | |
| Nom. Insulation OD± 0.002 (in.): | 0.037 | | 0.042 | | 0.057 | |
| Nom. Cable OD (in.): | 0.144 | | 0.153 | | 0.194 | |
| Nom. Cable Weight (lbs/1 kft): | 18.7 | | 22.2 | | 34.3 | |
| Shield Material: | SCC | | SCC | | SCC | |
| Jacket Material: | FEP | | FEP | | FEP | |
| Impedance ± 10% (Ω): | 100 | | 100 | | 100 | |
| Temp. Rating: | 200˚C | | 200˚C | | 200˚C | |
| Nom. Capacitance (pF/ft): | 13.5 | | 13.0 | | 12.9 | |
| Nom. Attenuation (dB/100m): | | | | | | |
| 1 MHz | 4.0 | | 2.2 | | 1.6 | |
| 10 MHz | 10.5 | | 6.8 | | 5.9 | |
| 100 MHz | 36.0 | | 24.8 | | 21.0 | |
| | 10 MHz | 100 MHz | 10 MHz | 100 MHz | 10 MHz | 100 MHz |
| Min. NEXT (dB) | 50 | 35 | 50 | 35 | 50 | 35 |
| Min. SRL (dB) | 23 | 16 | 23 | 16 | 23 | 16 |



Catalog 1654025
Revised 3-13

www.te.com

Dimensions are shown for reference purposes only. Specifications subject to change.

Dimensions are in millimeters unless otherwise specified.

USA: +1 800 522 6752
Asia Pacific: +86 0 400 820 6015
UK: +44 800 267 666

For additional support numbers please visit www.te.com

## QUADLITE Quadraxial Cables (Continued)

### Fiber Channel Cables
### 150 Ohms - 150˚C

| TE Part Number | CEC-RWC-18680 | CEC-RWC-18681 | CEC-RWC-18682 |
|---|---|---|---|
| Conductor AWG Size (19 Strand) | 26 | 24 | 22 |
| Conductor Material: | SCCA | SCCA | SCC |
| Nom. Conductor Diameter (in.): | 0.0185 | 0.0235 | 0.0295 |
| Insulation Material: | Formed FEP | Formed FEP | Formed FEP |
| Nom. Insulation OD± 0.002 (in.): | 0.058 | 0.077 | 0.094 |
| Nom. Cable OD (in.): | 0.193 | 0.224 | 0.281 |
| Nom. Cable Weight (lbs/1 kft): | 23.4 | 38.3 | 57.2 |
| Shield Material: | TCC | TCC | TCC |
| Jacket Material: | FEP | FEP | FEP |
| Impedance ± 10% (Ω): | 150 | 150 | 150 |
| Temp. Rating: | 150˚C | 150˚C | 150˚C |
| Nom. Capacitance (pF/ft): | 6.0 | 6.0 | 6.0 |
| Nom. Attenuation (dB/100m): | | | |
| 531 MHz | 13 | 11 | 9 |
| 1062 MHz | 21 | 17 | 13 |

### 150 Ohms - 200˚C

| TE Part Number | CEC-RWC-18684 | CEC-RWC-18685 | CEC-RWC-18686 |
|---|---|---|---|
| Conductor AWG Size (19 Strand) | 26 | 24 | 22 |
| Conductor Material: | SCCA | SCCA | SCC |
| Nom. Conductor Diameter (in.): | 0.0185 | 0.0235 | 0.0295 |
| Insulation Material: | Formed FEP | Formed FEP | Formed FEP |
| Nom. Insulation OD± 0.002 (in.): | 0.058 | 0.077 | 0.094 |
| Nom. Cable OD (in.): | 0.192 | 0.247 | 0.284 |
| Nom. Cable Weight (lbs/1 kft): | 25.8 | 38.3 | 57.2 |
| Shield Material: | SCC | SCC | SCC |
| Jacket Material: | FEP | FEP | FEP |
| Impedance ± 10% (Ω): | 150 | 150 | 150 |
| Temp. Rating: | 200˚C | 200˚C | 200˚C |
| Nom. Capacitance (pF/ft): | 6.0 | 6.0 | 6.0 |
| Nom. Attenuation (dB/100m): | | | |
| 531 MHz | 13 | 11 | 9 |
| 1062 MHz | 21 | 17 | 13 |

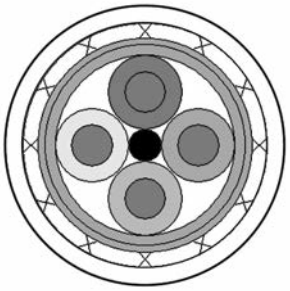

**Fiber Channel**







Dimensions are shown for reference purposes only. Specifications subject to change.

Dimensions are in millimeters unless otherwise specified.

USA: +1 800 522 6752
Asia Pacific: +86 0 400 820 6015
UK: +44 800 267 666

For additional support numbers please visit www.te.com

## QUADLITE Quadraxial Cables (Continued)

**4-Pair Cat 5E Constructions**
**100 Ohms - 150˚C/200˚C**

| TE Part Number | CEC-RWC-20412 | | CEC-RWC-21064 | | CEC-RWC-20638 | |
|---|---|---|---|---|---|---|
| Conductor AWG Size (19 Strand) | 24 | | 24 | | 26 (7 strand) | |
| Conductor Material: | SCHSCA | | SCC | | SCC | |
| Nom. Conductor Diameter (in.): | 0.0235 | | 0.0235 | | 0.019 | |
| Insulation Material: | Formed FEP | | Formed FEP | | Formed FEP | |
| Nom. Insulation OD± 0.002 (in.): | 0.046 | | 0.046 | | 0.036 | |
| Nom. Cable OD (in.): | 0.279 | | 0.249 | | 0.204 | |
| Nom. Cable Weight (lbs/1 kft): | 46.2 | | 39.5 | | 29.8 | |
| Shield Material: | TCC | | TCC | | SCC | |
| Jacket Material: | FEP | | XL-ETFE | | FEP | |
| Impedance ± 10% (Ω): | 100 | | 100 | | 100 | |
| Temp. Rating: | 150˚C | | 150˚C | | 200˚C | |
| Nom. Capacitance (pF/ft): | 13.5 | | 13.5 | | 13.5 | |
| Nom. Attenuation (dB/100m): | | | | | | |
| 1 MHz | 2.4 | | 2.2 | | 2.4 | |
| 100 MHz | 7.5 | | 6.8 | | 8.8 | |
| 100 MHz | 26.4 | | 24.8 | | 30.5 | |
| | 10 MHz | 100 MHz | 10 MHz | 100 MHz | 10 MHz | 100 MHz |
| Min. NEXT (dB) | 50 | 35 | 50 | 35 | 50 | 35 |
| Min. SRL (dB) | 25 | 19 | 25 | 19 | 23 | 16 |

**Cat 6 Constructions**
**100 Ohms - 100˚C/90˚C**

| TE Part Number | CEC-RWC-20837 | | CEC-RWC-21088 | |
|---|---|---|---|---|
| Conductor AWG Size (19 Strand) | 23 | | 23 | |
| Conductor Material: | Bare Copper | | Bare Copper | |
| Nom. Conductor Diameter (in.): | 0.021 | | 0.021 | |
| Insulation Material: | Foamed PE | | PE | |
| Nom. Insulation OD± 0.002 (in.): | 0.046 | | 0.046 | |
| Nom. Cable OD (in.): | 0.350 | | 0.249 | |
| Nom. Cable Weight (lbs/1 kft): | 52.6 | | 39.5 | |
| Shield Material: | TCC | | TCC | |
| Jacket Material: | FDR-25 | | Raythane | |
| Impedance ± 10% (Ω): | 100 | | 100 | |
| Temp. Rating: | 100˚C | | 90˚C | |
| Nom. Capacitance (pF/ft): | 13.5 | | 13.5 | |
| Nom. Attenuation (dB/100m): | | | | |
| 1 MHz | 1.8 | | 1.8 | |
| 100 MHz | 5.5 | | 5.5 | |
| 100 MHz | 18.3 | | 18.3 | |
| 250 MHz | 30.4 | | 30.4 | |
| | 10 MHz | 250 MHz | 10 MHz | 250 MHz |
| Min. NEXT (dB) | 70 | 52 | 70 | 52 |
| Min. SRL (dB) | 36 | 24 | 36 | 24 |



Catalog 1654025
Revised 3-13

www.te.com

Dimensions are shown for reference purposes only. Specifications subject to change.

Dimensions are in millimeters unless otherwise specified.

USA: +1 800 522 6752
Asia Pacific: +86 0 400 820 6015
UK: +44 800 267 666

For additional support numbers please visit www.te.com

## High Speed Copper Cable Assemblies

### Product Facts

- **End-to-end best performance systems solutions provider**
- **Quick design turnaround using in-house software**
- **Full electrical and environmental testing capability**
- **Certified test processes and equipment ensures optimal signal integrity**
- **Qualified assembly experts**
- **Complete lot traceability**
- **Reliability in harsh environments**
- **ISO 9001; AS 9100 certified**

TE supplies proven technology for high bandwidth data links to customers in the aerospace, ground systems and marine industries. Military cable requirements are designed, manufactured and tested to perform reliably in harsh environments.

Proper cable assembly is critical to realizing the full potential of the cable and connector technologies. TE's lightweight military cables and connector solutions are designed to reduce size and remove weight from your application, leading to benefits that include reduced fuel consumption and increased payload capacity.

Data assemblies can be developed for the following high speed protocols:

- Military Fiber Channel
- Ethernet (Fast Ethernet, GigE, 10GigE)
- 1394b Military Firewire
- USB 3.0

and many other serial communication architectures.

### Applications

Unmanned aerial vehicles (UAV), Helicopters, Fighters, Transport, Trainers, Missiles, Satellites, and Ground Vehicles

Applications include:

- Surveillance equipment, ground computing
- Communications
- Collision Avoidance, Navigation
- Cockpit Instrumentation
- Broadband Networks
- Command and Control

### Electrical

Testing capabilities include:

- DWV/IR
- Characteristic Impedance
- Return Loss/VSWR
- Insertion Loss
- Crosstalk
- Attenuation
- Eye Diagrams
- etc.

### Mechanical Tests Available:

- Vibration
- Mechanical Shock
- Mechanical Durability

### Environmental Tests Available:

- Salt Spray
- Thermal Shock / Termperature Life
- Humidity / Fluid Immersion

| Available in: | |
|---|---|
| Americas | ■ |
| Europe | ■ |
| Asia Pacific | ■ |





Catalog 1654025
Revised 3-13

www.te.com

Dimensions are shown for reference purposes only. Specifications subject to change.

Dimensions are in millimeters unless otherwise specified.

USA: +1 800 522 6752
Asia Pacific: +86 0 400 820 6015
UK: +44 800 267 666

For additional support numbers please visit www.te.com

## High Speed Copper Cables

### Product Facts

- Reduced engineering time
- Compatibility with numerous TE contacts and TE termination devices
- Integrated solution
- Cost savings
- Custom solutions available
- Complexity reduction for straight forward installation
- Increased bandwidth
- EMI protection
- Lightning protection
- Ruggedized to survive in harsh environments
- Reduced size and weight

### Description

TE Connectivity offers a large and growing range of High Speed Copper Cables for commercial and military aerospace, as well as ground systems and marine applications. Increased usages of high speed protocol such as Ethernet, Firewire, Fiber Channel and USB have become a necessity to be able to deliver information from one point to the next.

TE's high speed copper solutions along with TE's matched impedance contacts and connectors can provide a total solution. TE's total solution can increase the performance and the signal integrity while maintaining robustness in today's Aerospace, Defense and Marine applications.

TE's expansive research and development programs in material sciences are continually developing unique polymer solutions that will reduce weight and size while increasing robustness of our products

### Applications

Military Aerospace: Situation Awareness Systems (radar); Weapons Systems (missiles); Communications (radio and intercoms)

Commercial Aerospace: In-Flight Entertainment; Glass Cockpit; In-flight Wireless

Military Ground Systems: Glass Dashboard; Integrated Computer System; Remote Weapons System; Radio and Intercom Communications; Situational Awareness (thermal imaging, vision systems);

Smart Soldier Systems: Live health monitoring; Real Time Soldier Movement; Portable computers

### Materials

Conductor: Tin, Silver, Nickel or Copper

Also available in High Strength Alloys.

### Electrical

Matched impedance connectors and cables

Electro-magnetic interferences protection

150-Ohm FiberChannel

100-Ohm Gigabit Ethernet

### Mechanical

Small size, reduced complexity and weight

### Design Flexibility

CAD for quick response

High product performance

Optimum layout

Rapid quotations

Size and weight details

### Dielectric Solutions

TE has designed a new process for extruding Foamed FEP and other various jacket materials, allowing us the advantage of providing relatively uniform bubbles (void spaces) along the entire length of our cables.

This solution has a number of benefits which include increased electrical performance and integrity while maintaining mechanical robustness.

Excellent uniformity (void spaces); Excellent electrical performance; More robust product



Dimensions are shown for reference purposes only. Specifications subject to change.

Dimensions are in millimeters unless otherwise specified.

USA: +1 800 522 6752
Asia Pacific: +86 0 400 820 6015
UK: +44 800 267 666

For additional support numbers please visit www.te.com

## High Speed Copper Cables (Continued)

### HSC - part numbering system "high-speed conductor"

Example:

C5E - 26 B 1 2 4 - 7 1 4 - 9X

**Variation Code (3-digits):**

| | | | | | | | |
|---|---|---|---|---|---|---|---|
| 3EA | IEEE1394a | C6X | CAT6 | DSP | Display Port | LVD | LVD |
| 3EB | IEEE1394b | C7E | CAT7e | DVI | DVI | TGX | 1000B-T Quad |
| C5E | CAT5e | C7X | CAT7 | FBC | Fiber Channel | THX | 100B-T Quad |
| C6A | CAT6a | CBS | Canbus | HDM | HDMI | UB2 | USB 2.0 |
| | | | | | | UB3 | USB 3.0 |

**Conductor AWG Size (Data Pair):**

**Conductor Stranding (Data Pair):**

| | | | | | |
|---|---|---|---|---|---|
| A | Solid | B | 7 Strand | C | 19 Strand |

**Conductor Material (Data Pair):**

| | | | |
|---|---|---|---|
| 1 | Tin-coated copper | 9 | Bare copper |
| 2 | Silver-coated copper | 0 | Other |
| 3 | Nickel-coated copper | A | Silver-coated ultra high-strength copper alloy |
| 4 | Silver-coated high-strength copper alloy | | |
| 6 | Nickel-coated high-strength copper alloy | | |

**Dielectric Material (Data Pair):**

| | | | | | |
|---|---|---|---|---|---|
| 1 | Rayfoam L | 5 | UXL-ETFE | 0 | Other |
| 2 | Rayfoam H | 6 | XL-ETFE | L | Low Fluoride XL-ETFE |
| 3 | Rayolin F | 7 | Flexible XL-ETFE | | |
| 4 | Modified FEP | 8 | Rayfoam FS | | |

**Number of Data Pairs:**

1 - 10 (designator for 10 conductor = 0)

**Special Construction (P-Line = Power Line):**

| | | | | | | | |
|---|---|---|---|---|---|---|---|
| - | Standard | C | 26 AWG (P-Line) | F | 20 AWG (P-Line) | W | Waterblocked |
| A | 30 AWG (P-Line) | D | 24 AWG (P-Line) | G | 18 AWG (P-Line) | X | Special construction |
| B | 28 AWG (P-Line) | E | 22 AWG (P-Line) | S | Space rated | | |

**Shield Type:**

See page 2.

**Shield Material (each, when more than one shield):**

| | | | |
|---|---|---|---|
| 1 | Tin-coated copper | 4 | Silver-coated high-strength copper alloy |
| 2 | Silver-coated copper | U | Unshielded |
| 3 | Nickel-coated copper | | |

**Jacket Material (each, when more than one jacket):**

| | | | | | |
|---|---|---|---|---|---|
| 1 | Thermorad K | 8 | Zerohal | M | Laser Markable FEP |
| 3 | Thermorad F & S | 9 | None | N | Thermorad NTFR |
| 4 | Modified FEP | 0 | Other | R | Raythane FR |
| 5 | UXL-ETFE | C | Raythane C | T | Thermorad O |
| 6 | Thermorad HT | F | FDR-25 | W | PET wrap |
| 7 | Thermorad FL | L | Low Fluoride XL-ETFE | | |

**Outer Jacket Color (code per MIL-STD-681, except as noted):**

(For translucent colors, an "X" is added to the end of the color.
Example: 9X = Translucent White)

| | | | | | | | |
|---|---|---|---|---|---|---|---|
| 0 | Black | 3 | Orange | 6 | Blue | 9 | White |
| 1 | Brown | 4 | Yellow | 7 | Violet | X | Clear |
| 2 | Red | 5 | Green | 8 | Gray | | |

Rayfoam, Rayolin, Raythane, Thermorad, and Zerohal are trademarks.







Dimensions are shown for reference purposes only. Specifications subject to change.

Dimensions are in millimeters unless otherwise specified.

USA: +1 800 522 6752
Asia Pacific: +86 0 400 820 6015
UK: +44 800 267 666

For additional support numbers please visit www.te.com

## High Speed Copper Cables (Continued)

**Description**

Ethernet

**Ethernet Category Cables**

Markets: Commercial and MIL Aero, Marine, Military Ground Systems

Speeds: 10 Mbits/s to 10 Gbit/s

Common Names: Quadrax, Cat5e, Cat6, Cat 6a, Cat7

Primary Usage: Generalized Data Communications

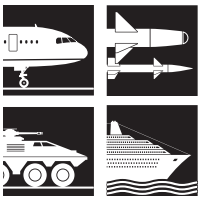

Firewire

**FireWire/IEEE 1394**

Markets: Aerospace Commercial and Military

Speeds: 100 Mbits/s to 3.2 Gbit/s

Primary Usage: High Data Rate Communication; Bus Independent

DVI

**Digital Video Interface (DVI)**

Markets: Marine and Ground Systems

Primary Usage: Video Displays, Uni-Directional Data Transfer

Fiber Channel

**Fiber Channel**

Markets: Aerospace

Speeds: 200 MB/s to 1.6 GB/s

Primary Usage: Storage Technologies and Long Distance Communications

USB-2.0

**Universal Serial Bus (Hi-Speed)**

Markets: Aerospace, Ground Systems, Marine, Missiles

Speeds: up to 480 Mbit/s

Primary Usage: Universal Data Transfer- requires computing system to function

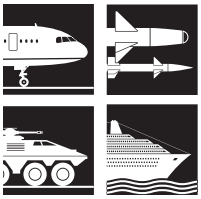

USB-3.0

**Universal Serial Bus (Super-Speed)**

Markets: Aerospace, Ground Systems, Marine, Missiles

Speeds: 5 Gbit/s

Primary Usage: Universal Data Transfer- requires computing system to function

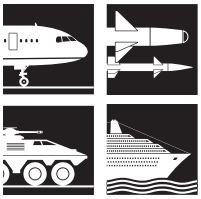



Catalog 1654025
Revised 3-13

www.te.com

Dimensions are shown for reference purposes only. Specifications subject to change.

Dimensions are in millimeters unless otherwise specified.

USA: +1 800 522 6752
Asia Pacific: +86 0 400 820 6015
UK: +44 800 267 666

For additional support numbers please visit www.te.com

## High Speed Copper Cables (Continued)

### Compatible Products

The listing below is an “example” only of compatible products. For additional information, contact TE.

CeeLok FAS-T Connector

Molded Shapes

Band Straps

SolderSleeve Termination Devices

Gigabit Ethernet Connectors

EN4165

Quadrax Contacts

Twinax Contacts

### Jacket Materials

| Jacket Materials | Temperature Range (˚C) | Abrasion Resistance | Flexibility | Typical Industry Use |
|---|---|---|---|---|
| Thermorad K (Modified PVDF) | -65 to +150 | Very Good | Fair | Aerospace, Ground and Marine |
| Thermorad F & S | -55 to +125 | Good | Good | Ground Systems |
| Modified FEP | -65 to +200 | Good | Good | Aerospace |
| UXL-ETFE | -65 to +150 | Good | Fair | Aerospace and Ground Systems |
| Thermorad HT (Modified ETFE) | -65 to +200 | Very Good | Fair | Aerospace |
| Thermorad FL | -55 to +200 | Very Good | Good | Aerospace |
| Zerohal | -30 to +105 | Good | Good | Marine |
| FDR-25 | -40 to +105 | Fair | Excellent | Ground Systems |
| Low Fluoride XL-ETFE | -65 to +200 | Very Good | Fair | Aerospace |
| Laser Markable FEP | -65 to +200 | Good | Good | Aerospace |
| Thermorad NTFR | -55 to +110 | Good | Excellent | Ground Systems and Marine |
| Raythane FR | -65 to +90 | Excellent | Excellent | Marine |
| Thermorad O | -55 to +125 | Good | Good | Ground Systems and Marine |





Catalog 1654025
Revised 3-13

www.te.com

Dimensions are shown for reference purposes only. Specifications subject to change.

Dimensions are in millimeters unless otherwise specified.

USA: +1 800 522 6752
Asia Pacific: +86 0 400 820 6015
UK: +44 800 267 666

For additional support numbers please visit www.te.com

## Custom-designed and standard Multiconductor (Multicore) Cables

### Product Facts

- Temperature capability: -55°C to +260°C [-67°F to +500°F]
- Small size, lightweight
- System compatibility with other Raychem products
- Complete range of components
- Specially formulated jacket materials
- Special shielding to address EMI/EMC problems
- Custom designed and purpose built
- Fast response—design, pricing, and delivery
- Prototype length facility
- Raychem Dynalink for extended flex-life and increased flexibility
- Fire-resistance; circuit integrity (IEC60331), enhanced 950˚C [1742˚F, 3 hours]
- Small size, lightweight, low fire-hazard for modern high-speed vessels

### Applications

TE is the leading manufacturer of Raychem custom-designed, small-size, lightweight, high-performance multi-conductor (multicore) cables. Applications are found in the aerospace, commercial marine, naval, mass transportation, automotive, offshore, military ground vehicle, ground support, high-performance instrumentation, industrial, and commercial markets. Raychem multiconductor (multicore) cables have been approved to many standards demanding high performance criteria in service use.

### Multiconductor (Multicore) Cables Purpose Built and Designed Using Raychem Components and Technology

Multiconductor cables are used in widely varying applications and environments. Careful consideration must be given to the selection of components with the right combination of physical, chemical, and electrical properties for specific applications.

TE's leadership in the technologies of polymer blending and subsequent radiation crosslinking has led to the development of a particularly broad range of Raychem brand cables. High-performance component wires and miniature coaxial cables are combined with unique cable jacket materials to meet the requirements of demanding environments.

Established as the leading manufacturer of special purpose Raychem cables, TE has continued to develop both its design and manufacturing expertise.

Development of a sophisticated CAD system has allowed increasingly rapid response to any design request, followed by manufacturing to the highest quality standards.

| Available in: | |
|---|---|
| Americas | ■ |
| Europe | ■ |
| Asia Pacific | ■ |

### Specifications/Approvals

| Agency | Industry | Military | TE |
|---|---|---|---|
| Underwriters' Laboratories | Lloyd's Register of Shipping | Def. Stan 61-12 Pt 25 | WCD series |
| CSA (Canadian Standards Assn.) | Det Norske Veritas | MIL-DTL-24640 | |
| ISO9001:2000 | | MIL-DTL-24643 | |
| MSV 34410-34413; 34435; 34436 | | VG 95218 Pts 27 and 28 | |
| ANSI/ISO/ASQ Q9001-2000 | | | |



Dimensions are shown for reference purposes only. Specifications subject to change.

Dimensions are in millimeters unless otherwise specified.

USA: +1 800 522 6752
Asia Pacific: +86 0 400 820 6015
UK: +44 800 267 666

For additional support numbers please visit www.te.com

## Multicore Cables

### Design Flexibility

**Components**

- SPEC 44 wire and cable
- SPEC 55 wire and cable
- Type 99 wire and cable
- 100 wire and cable
- ElectroLoss FilterLine cables
- Flexible power cables
- Optical fibers
- Controlled electrical cables

**Wraps and Braids**

- Fabric and film tapes
- Aramid or steel strength members
- Full range of electrical screens (including SuperScreens)

**Jacket Materials**

| | |
|---|---|
| ■ FDR 25 | - Fluid resistant, flexible, high temperature |
| ■ Thermorad/ Thermorad F | - General purpose |
| ■ Thermorad HTF | - Very high temperature fluoroelastomer, fluid resistant |
| ■ Raythane C | - Tough and flexible |
| ■ Raythane FR | - Tough, flexible, flame-retardant |
| ■ Rayolin | - Low moisture transmission |
| ■ NT/ Thermorad NTFR | - Low-temperature flexibility |
| ■ Zerohal | - LFH (Low Fire Hazard) |







Dimensions are shown for reference purposes only. Specifications subject to change.

Dimensions are in millimeters unless otherwise specified.

USA: +1 800 522 6752
Asia Pacific: +86 0 400 820 6015
UK: +44 800 267 666

For additional support numbers please visit www.te.com

## How to Build a Multicore Cable

This guide is designed to help you identify the building blocks necessary to create a custom multi-core cable design.

1. **What is your application/end-use?**

2. **What temperature rating is required (in degrees C)?**

3. **How many components are needed?**

4. **What is each component used for (data, signal or power)?**

5. **What would be the size of each of the components (in AWG)?**

6. **Are there any electrical shielding (EMI) requirements? If so, please list specifics (ex: component shielding, cable shielding)?**

7. **Are there specific flexibility, mechanical, or fluid resistance requirements? If so, please list specifics and rank the order of importance.**

8. **Do you require special lengths?**

9. **Is there a customer specification involved? If so, please provide a copy.**

10. **Please list any timelines and annual usage estimates.**



Catalog 1654025
Revised 3-13

www.te.com

Dimensions are shown for reference purposes only. Specifications subject to change.

Dimensions are in millimeters unless otherwise specified.

USA: +1 800 522 6752
Asia Pacific: +86 0 400 820 6015
UK: +44 800 267 666

For additional support numbers please visit www.te.com

## Computer Aided Design

### Custom Design Capability

#### Applications

Every year, TE designs and builds several thousand custom, high-performance, multiconductor cables that meet unique product needs.

Design staff can draw on an extensive range of high-performance cable components and jacket materials, while incorporating both color-coding and alphanumeric marking techniques for component identification. These options, combined with a full range of EMI shields, lead to a huge variety of construction possibilities.

TE developed computer-aided design tools to provide a fast response to design requests. The software, used by factory engineers or product specialists in the field, can generate cable design proposals with drawings and quotations in minutes. A design drawing details all the cable data and can be used as the input to harness or cable splice (joint) design. The resulting cable is tailored to customers' exact needs in an efficient design that is superior to the competitor's cable selected from a product catalog.

#### Quality Assurance

Raychem WCD and WSD cable specifications ensure that performance and quality standards are maintained to the highest level. TE manufacturing sites have obtained the highest available quality system approvals, including ISO 9000 and QS9000. Raychem cables are manufactured to meet the requirements of several major specifications.



| Available in: | |
|---|---|
| Americas | ■ |
| Europe | ■ |
| Asia Pacific | ■ |



Catalog 1654025
Revised 3-13

www.te.com

Dimensions are shown for reference purposes only. Specifications subject to change.

Dimensions are in millimeters unless otherwise specified.

USA: +1 800 522 6752
Asia Pacific: +86 0 400 820 6015
UK: +44 800 267 666

For additional support numbers please visit www.te.com

## Custom Shipboard Cables

### Product Facts

- **Waterblocked cables are available using tapes and yarns vs. silicone, which improves size and flexibility**
- **Low smoke, zero halogen jackets compliant with current MIL Spec applications**
- **Small order quantities available on most designs**
- **Lightweight state-of-the-art cable insulation technology**
- **TE design specialists work directly with customers**
- **RoHS products available**

### Applications

TE offers a full range of customized shipboard cables that can save users time, money and weight by packaging multiple cables into a single zero-halogen jacket per MIL-DTL-24640 specification.

Cables can be used for a variety of applications including control, lighting, signal and power.

Consolidation of individual cables for various applications including weapons and communications systems.

Data and power cables can be combined in the same bundle to decrease weight and size on cable runs.

| Available in: | |
|---|---|
| Americas | ■ |
| Europe | ■ |
| Asia Pacific | ■ |



Catalog 1654025
Revised 3-13

www.te.com

Dimensions are shown for reference purposes only. Specifications subject to change.

Dimensions are in millimeters unless otherwise specified.

USA: +1 800 522 6752
Asia Pacific: +86 0 400 820 6015
UK: +44 800 267 666

For additional support numbers please visit www.te.com

## RayBraid Tubular Braiding

### Tubular Braiding for the Electrical Screening of Wire Bundles

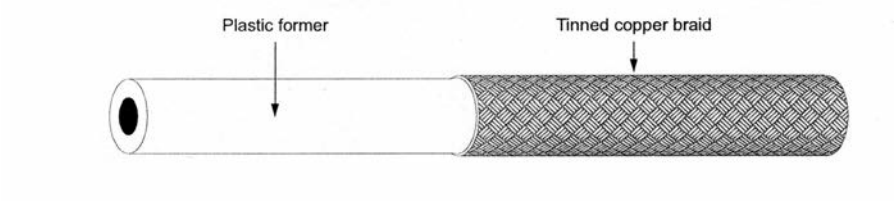


### Product Facts

- **Screening for military harnesses**
- **Easy removal from former**
- **Minimum 90% optical coverage**
- **Ray 101 and Ray 103 super flexible with high expansion ratios**

To ease the assembly of hand built harnesses, TE manufactures a range of braids for the electrical screening of wire bundles.

RayBraid is supplied on a tube former which facilitates assembly and is more robust than braid supplied in flattened form.

TE also supplies connectors suitable for braid terminations.

### Applications

When stored under typical conditions of less than 30Â˚C and less than 70% relative humidity, the shelf life of the wire is effectively unlimited. Where the product contains a standard tin plated or bare copper conductor or braid there will be a progressive reduction in the solderability with increasing storage time. Under the conditions mentioned above, excellent solderability should be retained for about one year from manufacturing date, but if this is an important property, it should be checked before use. The suitability of the tin plated or bare copper conductor for use with crimped or welded termination techniques will not be affected by storage time.

Silver and nickel plated conductors are essentially unaltered by normal storage.

### Types

Ray 90 (Tinned Copper Braid):

- Minimum 90% optical coverage available in 10 different sizes from 3.0 to 30.0 mm supplied diameter.

Ray 101 (Tinned Copper Braid):

- Minimum 93% maximum 100% optical coverage possess high usable expansion ratio (minimum 2:1).
- Available in a wide range of sizes to cover 2.5 to 38.0 mm diameters.
- Fully compatible with Tinel-Lock adapters for termination of the braid to associated connectors.

Ray 103 (Nickel Copper Braid):

- Minimum 93% maximum 100% optical coverage possess high usable expansion ratio (minimum 2:1).
- Available in a wide range of sizes to cover 2.5 to 38.0 mm diameters.
- Fully compatible with Tinel-Lock adapters for termination of the braid to associated connectors.

### Operating Temperature Range

Ray 90:
up to 150˚C [302˚F]

Ray 101:
up to 150˚C [302˚F]

Ray 103:
above 150˚C [302˚F]





Catalog 1654025
Revised 3-13

www.te.com

Dimensions are shown for reference purposes only. Specifications subject to change.

Dimensions are in millimeters unless otherwise specified.

USA: +1 800 522 6752
Asia Pacific: +86 0 400 820 6015
UK: +44 800 267 666

For additional support numbers please visit www.te.com

## RayBraid Tubular Braiding (Continued)

### Characteristics

| | Part Number | Diameter of former (mm) | Tinned Copper Wire: No. of Carriers | No. of Ends per Carrier | Individual Strand Size (AWG/mm) | Minimum Coverage (%) | Cable Bundle Tolerance: Maximum (mm) | Minimum (mm) |
|---|---|---|---|---|---|---|---|---|
| **Ray 90** | -3.0 | 3.0 ± 0.13 | 16 | 5 | 36/0.13 | 90 | 3.5 | 2.0 |
| | -4.0 | 4.0 ± 0.25 | 16 | 7 | 36/0.13 | 90 | 5.0 | 3.0 |
| | -5.0 | 5.0 ± 0.25 | 24 | 6 | 36/0.13 | 90 | 6.0 | 4.0 |
| | -6.0 | 6.0 ± 0.25 | 24 | 7 | 36/0.13 | 90 | 7.0 | 5.0 |
| | -10.0 | 10.0 ± 0.25 | 24 | 9 | 34/0.16 | 90 | 12.0 | 7.0 |
| | -12.5 | 12.5 ± 0.25 | 24 | 10 | 34/0.16 | 90 | 13.0 | 11.0 |
| | -15.0 | 15.0 ± 0.38 | 24 | 11 | 32/0.20 | 90 | 18.0 | 13.0 |
| | -20.0 | 20.0 ± 0.38 | 36 | 7 | 32/0.20 | 90 | 23.0 | 17.0 |
| | -25.0 | 25.0 ± 0.38 | 36 | 9 | 30/0.25 | 90 | 28.0 | 22.0 |
| | -30.0 | 30.0 ± 0.38 | 36 | 9 | 28/0.32 | 90 | 36.0 | 27.0 |
| **Ray 10X** | -3.0 | 3.0 ± 0.13 | 16 | 10 | 38/0.10 | 93 | 5.0 | 2.5 |
| | .4.0 | 4.0 ± 0.25 | 24 | 7 | 36/0.13 | 93 | 7.5 | 3.5 |
| | -6.0 | 6.0 ± 0.25 | 24 | 9 | 36/0.13 | 93 | 9.5 | 4.5 |
| | -7.5 | 7.5 ± 0.25 | 24 | 14 | 36/0.13 | 93 | 14.0 | 7.0 |
| | -10.0 | 10.0 ± 0.25 | 36 | 12 | 36/0.13 | 93 | 22.0 | 8.0 |
| | -12.5 | 12.5 ± 0.25 | 36 | 15 | 36/0.13 | 93 | 24.0 | 11.0 |
| | -20.0 | 20.0 ± 0.38 | 48 | 16 | 36/0.13 | 93 | 38.0 | 16.0 |

The X in the part number shall be replaced with the plating type.

### Weight

| Part Number | Ray -90 Weight (excluding former) kg/km (nom) | Ray -101 Weight (excluding former) kg/km (nom) |
|---|---|---|
| -3.0 | 13 | 10.3 |
| -4.0 | 17 | 17.0 |
| -5.0 | 21 | — |
| -6.0 | 25 | 25.0 |
| -7.5 | 52 | 31.0 |
| -10.0 | 52 | 41.0 |
| -12.5 | 65 | 51.0 |
| -15.0 | 100 | — |
| -20.0 | 165 | 81.0 |
| -25.0 | 207 | — |
| -30.0 | 310 | — |

### Resistance

The following current ratings are to be used as general guidelines. Ratings based on an ambient temperature of 20˚C and a temperature rise above ambient of 40˚C.

| Part Number | Ray -90: CSA mm2 | Resistance @ 20˚C in ohms/km | Current (amps) | Ray 101: CSA mm2 | Resistance @ 20˚C in ohms/km | Current (amps) | Ray 103: Resistance @ 20˚C in ohms/km |
|---|---|---|---|---|---|---|---|
| -3.0 | 1.0 | 28.0 | 17 | 1.3 | 17.0 | 18 | 17.3 |
| -4.0 | 1.4 | 18.3 | 21 | 2.1 | 10.3 | 28 | 10.5 |
| -5.0 | 1.8 | 13.8 | 25 | — | — | — | — |
| -6.0 | 2.1 | 12.2 | 28 | 2.7 | 8.0 | 34 | 8.1 |
| -7.5 | — | — | — | 4.3 | 5.2 | 42 | 5.23 |
| -10.0 | 4.3 | 6.0 | 42 | 5.5 | 3.96 | 52 | 4.02 |
| -12.5 | 4.8 | 6.1 | 48 | 6.8 | 3.23 | 57 | 3.28 |
| -15.0 | 8.3 | 3.0 | 67 | — | — | — | — |
| -20.0 | 12.8 | 2.2 | 81 | 9.7 | 2.32 | 69 | 2.35 |
| -25.0 | 16.4 | 1.6 | 98 | — | — | — | — |
| -30.0 | 26.0 | 1.0 | 125 | — | — | — | — |



Dimensions are shown for reference purposes only. Specifications subject to change.

Dimensions are in millimeters unless otherwise specified.

USA: +1 800 522 6752
Asia Pacific: +86 0 400 820 6015
UK: +44 800 267 666

For additional support numbers please visit www.te.com

## Properties and Specifications

### Specifications and Approvals (Components and Jacket Materials)

| Specifications UK Designation | FDR 25 | Zerohal | Fluoro-elastomer | Thermorad | Rayolin | Raythane C | AFR | NT | 44 Wire | 55 Wire | 100 Wire | 99 Wire | Hytrel |
|---|---|---|---|---|---|---|---|---|---|---|---|---|---|
| **US Designation** | **FDR 25** | **Zerohal** | **Thermorad HTF** | **Thermorad F** | | **Raythane FR** | | **Thermorad NTFR** | **44 Wire** | **55 Wire** | **100 Wire** | | |
| Def Stan 61-12 Part 31 | | X | | | | | | | | | | | |
| Def Stan 61-12 Part 25 | | X | | | | | | | X | | | X | |
| Def Stan 61-12 Part 18 type 1 (issue in effect ) | | X | | | | | | | | | | X | |
| Def Stan 61-12 Part 26 | | | | | | | | | X | | | | |
| 34435, 34436 | | X | | | | | | | X | | | | |
| VG 95218 Part 20, 21, 22 and 23 | | | | | | | | | X | X | X | | |
| VG 95218 Part 24, 25 and 26 | X | | | | | | | | | | | | |
| VG 95218 Part 27 and 28 | X | X | | | | | | | X | | X | | |
| VG 95218 Part 1000 | | | | | | | | | X | | | | |
| VG 95218 Part 1001 and 1002 | | | | | | | | | | X | | | |
| MIL-DTL-24640 (PMS 400/MII-C-915) | | X | | | | | | | X | | | | |
| SAE-AS-81044/NEMA WC27500 | | | | | | | | | X | | | | |
| SAE-AS-22759/NEMA WC27500 | | | | | | | | | | X | | | |
| A014000 | | X | | | | | | | | | | X | |
| O2-517 | | X | | | X | | | | X | | | | |
| MIL-DTL-24643 | | X | | | | | | | | | | | |
| **Approvals** | | | | | | | | | | | | | |
| Lloyds Register of Shipping | | X | | X | | X | | | X | | | X | |
| Bureau Veritas | X | X | X | X | | X | X | X | X | X | | | |
| UL | | | | X | | X (FR) | X | | X | X | | | |
| CSA | | | | | | | | | X | X | | | |
| BWB | X | | | X | | | | | X | X | | | |
| VDE | X | | | X | | | | | X | X | | | |
| Germanischer Lloyd | | X | | | | | | | | | X | | |
| American Bureau of Shipping | | X | | | | | | | | | X | | |

* Please check with your TE representative to ensure the product required has the correct approval.





Catalog 1654025
Revised 3-13

www.te.com

Dimensions are shown for reference purposes only. Specifications subject to change.

Dimensions are in millimeters unless otherwise specified.

USA: +1 800 522 6752
Asia Pacific: +86 0 400 820 6015
UK: +44 800 267 666

For additional support numbers please visit www.te.com

## Properties and Specifications (Continued)

### Major Cable Specifications

| Country | Cable Specification | Specification Description | Approved Jacket |
|---|---|---|---|
| UK | Def Stan 61-12 Part 25 | Royal Navy specification covering limited fire hazard thin-wall insulated electric cables using Def-Stan 61-12 Part 18 approved wire. Signal, control and light power circuits. | Zerohal |
| Germany | VG 95218 (parts 27 and 28) | Military ground systems specification for signal, control and power cables. Wire to VG 95218 Parts 20-23 and 1000. | FDR-25 |
| USA | MIL-C-24640 (PMS 400/MIL-C-915) | Navy specification covering limited fire hazard thin-wall insulated electric cables for signal, control and light power circuits. Wire to SAE-AS81044. | Zerohal |
| USA | MIL-DTL-24643 | Navy specification covering low smoke, watertight, and non-watertight electric cables for signal, control, and light power circuits for shipboard applications. | Zerohal |

### Summary of Typical Cable Jacket Properties

| UK Designation | US Designation | Property | | | | | | Chemical Resistance | | |
|---|---|---|---|---|---|---|---|---|---|---|
| | | Temperature Range °C* | Abrasion Resistance | Flexibility | Tensile Strength (MPa) | Elongation % | Flame Resistance | Acid | Alkaline | Hydrocarbon |
| FDR25 | FDR25 | -40 to 105 | Fair | Very Good | 20 | 500 | Self-ext;ing | Good | Good | Very Good |
| Zerohal | Zerohal UK & US | -30 to 105 | Good | Good | 10 | 200 | Self-ext;ing | Good | Good | Good |
| Fluoroelastomer | Thermorad HTF | -20 to 200 | Good | Good | 12 | 400 | Nonburning | Excellent | Excellent | Excellent |
| Thermorad | Thermorad F | -55 to 125 | Good | Good | 22 | 400 | Self-ext;ing | Good | Good | Good |
| Raythane C | — | -25 to 80 | Excellent | Excellent | 40 | 500 | Self-ext;ing | Fair | Fair | Excellent |
| — | Raythane FR | -65 to 90 | Excellent | Excellent | 28 | 500 | Self-ext;ing | Fair | Fair | Excellent |
| NT | Thermorad NTFR | -55 to 110 | Very Good | Excellent | 17 | 300 | Self-ext;ing | Good | Good | Good |
| Rayolin | — | -55 to 95 | Very Good | Fair | 19 | 250 | Self-ext;ing | Good | Good | Good |
| AFR | — | -40 to 105 | Excellent | Good | 10 | 150 | Self-ext;ing | Good | Good | Good |
| — | Thermorad O | -55 to 125 | Good | Good | 15 | 400 | Self-ext;ing | Good | Good | Good |
| — | Thermorad 770 | -55 to 175 | Very Good | Good | 35 | 500 | Nonburning | Excellent | Excellent | Excellent |
| — | Thermorad 780 | -55 to 200 | Very Good | Good | 24 | 350 | Nonburning | Excellent | Excellent | Excellent |
| — | Thermorad 790 | -55 to 250 | Very Good | Good | 30 | 350 | Nonburning | Excellent | Excellent | Excellent |
| Modified PVDF | Thermorad K | -65 to 150 | Very Good | Fair | 20 | 400 | Nonburning | Excellent | Excellent | Excellent |
| Modified ETFE | Thermorad HT | -65 to 200 | Very Good | Fair | 34 | 100 | Self-ext;ing | Excellent | Excellent | Excellent |
| Modified Flexible ETFE | Thermorad FL | -55 to 200 | Very Good | Excellent | 20 | 100 | Self-ext;ing | Excellent | Excellent | Excellent |
| — | Thermorad HTOS | -65 to 200 | Very Good | Very Good | 34 | 100 | Self-ext;ing | Excellent | Excellent | Excellent |
| — | Thermorad HTLF | -65 to 200 | Very Good | Very Good | 34 | 100 | Self-ext;ing | Excellent | Excellent | Excellent |
| — | Thermorad HTASLF | -65 to 200 | Very Good | Very Good | 34 | 100 | Self-ext;ing | Excellent | Excellent | Excellent |
| — | Thermorad VPB | -65 to 200 | Very Good | Very Good | 23 | 500 | Self-ext;ing | Excellent | Excellent | Excellent |

*Operating temperatures for cables are application dependent. Figures shown are for guidance only. In many cases the limits shown may be extended at both ends of the temperature range. Consult TE for guidance.

## FDR25

### Flexible, Diesel Resistant Wire and Cable Jacket Material

### Product Facts

- Highly flame retardant
- Compatible with Raychem System 25 tubing, molded parts and adhesives
- Qualified to VG standards

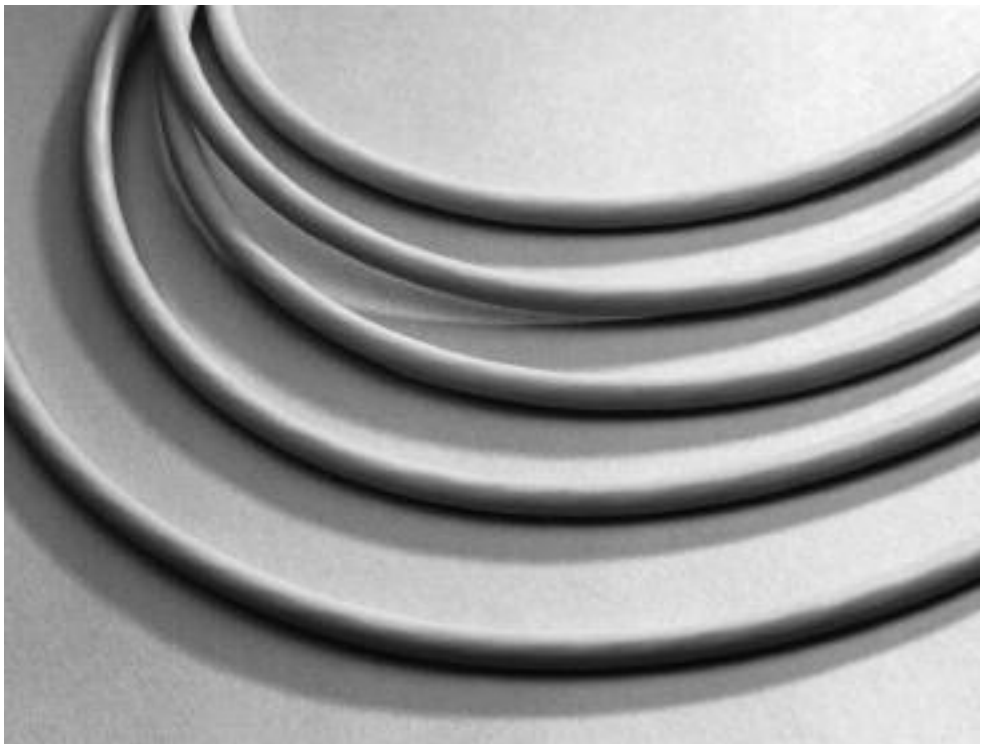

### Applications

FDR 25 cable jacket was originally developed for the Leopard II main battle tank to provide an exceptional range of properties. Used in compartments exposed to hot diesel fuels and vibration, FDR 25 resists a wide range of aggressive fluids and offers excellent low temperature flexibility. These properties have also led to a widespread use of FDR 25 on other military vehicles and in many applications such as test and communications equipment. FDR 25 is fully compatible with the Raychem System 25 high performance harnessing system.

### Operating Temperature Range

-40°C to 150°C
[-40°F to 302°F]

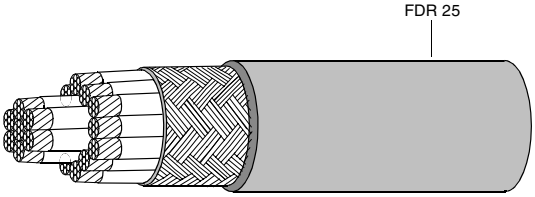


| Available in: | |
|---|---|
| Americas | ■ |
| Europe | ■ |
| Asia Pacific | ■ |





Catalog 1654025
Revised 3-13

www.te.com

Dimensions are shown for reference purposes only. Specifications subject to change.

Dimensions are in millimeters unless otherwise specified.

USA: +1 800 522 6752
Asia Pacific: +86 0 400 820 6015
UK: +44 800 267 666

For additional support numbers please visit www.te.com

## FDR25 (Continued)

### Typical Characteristics when Tested in Accordance with TE Specification WCD 2002 (UK) and WCD 3304 (US)

| | | | |
|---|---|---|---|
| Mechanical | Tensile strength (MPa)<br>Elongation (%)<br>Tear strength (N/mm)<br>Abrasion resistance (1.6 kg load)<br>Cold bend | 20<br>500<br>5<br>40 scrapes min.<br>-40°C [-40°F] | |
| Thermal aging | Endurance IEC 60216-1<br>Heat aging 120h, 175°C [347°F]<br>Heat shock 4 h at 225°C [437°F] | 2500 h 150°C [302°F]<br>TS 8 MPa (min). Eb 150% (min)<br>No cracks, drips or flowing,<br>6 mm total shrinkage in 300 mm | |
| Fluid resistance | 24 h immersion | % Retention of properties<br>Tensile strength | Elongation |
| | Diesel fuels 70°C [158°F] | 70 | 70 |
| | Hydraulic fluids 50°C [122°F] | 70 | 70 |
| | Lubricating oils 70°C [158°F] | 70 | 80 |
| | Cleaning fluids 23°C [73°F] | 90 | 95 |
| | Deicing fluids 23°C [73°F] | 90 | 95 |
| Electrical | Insulation resistance 20°C [68°F] M ohm.km min. | 2 | |
| Other | 45° flammability | 30 s (max) afterburn<br>100 mm (max) burn length | |
| | Vertical flammability | Self extinguishing | |
| | Acid gas | 4% HCl equivalent (max.) | |



Dimensions are shown for reference purposes only. Specifications subject to change.

Dimensions are in millimeters unless otherwise specified.

USA: +1 800 522 6752
Asia Pacific: +86 0 400 820 6015
UK: +44 800 267 666

For additional support numbers please visit www.te.com

## Zerohal

### Low Fire Hazard Performance Wire and Cable Jacket Material

### Product Facts

- Halogen free
- Low smoke generation
- Highly flame retardant
- Low toxicity index
- Low corrosive gas emission
- Temperature rating -30°C to +105°C [-22°F to +221°F]

| Available in: | |
|---|---|
| Americas | ■ |
| Europe | ■ |
| Asia Pacific | ■ |

### Applications

Cables rarely initiate fires, but they could be involved in them and can significantly increase the damage caused should they propagate the fire. Until recently the flame retarding of cables was achieved by the use of halogenated flame retardants which are effective fire suppressants, but which unfortunately produce dense smoke and corrosive acid gases when burned. These effects are highly undesirable in a fire, hindering evacuation and fire fighting, endangering life and causing corrosion damage to expensive and vital equipment.

Raychem Zerohal is a halogen-free cable jacket material developed by TE and approved to the most exacting requirements for low fire hazard cables in many countries and, as such, is the most widely accepted material for these applications in the marine, process and mass transport industries. Combined with SPEC 44 wire or Type 99 and 100 wire, this jacket material provides small size, light weight cables (approximately 40% weight saving over conventional materials).

Zerohal combines the good mechanical and electrical features of some conventional cables with good flame retardancy, low smoke generation, low evolution of hazardous and corrosive gases, and good resistance to diesel fuel, lubricating oils and water.

Zerohal jacket material is fully compatible with the low fire hazard harnessing system - System 100.

### System

- System 100

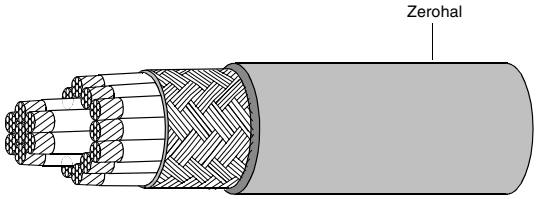






Catalog 1654025
Revised 3-13

www.te.com

Dimensions are shown for reference purposes only. Specifications subject to change.

Dimensions are in millimeters unless otherwise specified.

USA: +1 800 522 6752
Asia Pacific: +86 0 400 820 6015
UK: +44 800 267 666

For additional support numbers please visit www.te.com

## Zerohal (Continued)

### Typical Characteristics when Tested in Accordance with TE Specification WCD 2015 and WC 2001 (Zerohal with Fungicide)

| | | | |
|---|---|---|---|
| Mechanical | Tensile strength (MPa)<br>Elongation (%)<br>Tear strength (N/mm)<br>Abrasion resistance (1.6 kg load )<br>Cold bend | 9<br>200<br>5<br>30 scrapes min.<br>-30°C [-22°F] | |
| Thermal aging | Heat aging 120 h 130°C [266°F] | 60% min retention of TS and Eb | |
| | Heat shock 4 h at 225°C [437°F] | No cracks, drips or flowing,<br>6 mm total shrinkage in 300 mm | |
| Fluid resistance | | Retention of properties | |
| | | Tensile strength | Elongation |
| | Diesel fuels 20°C [68°F] /24 h | 85 | 75 |
| | IRM 902 24h, 100°C [212°F] | 90 | 75 |
| | Lubricating oils 50°C [122°F]/24 h | 80 | 75 |
| | Water uptake (ASTM D570) 70°C [158°F] /28 days | 4% weight uptake (max) | |
| Electrical | Insulation resistance 20°C [68°F]<br>M ohms km (min) | 1 | |
| Other | 45° flammability | Self extinguishing | |
| | Vertical flammability<br>(Swedish Chimney) | Self extinguishing | |
| | Acid gas | 1.2% HCl equivalent (max) | |
| | Limiting oxygen index | 32% | |
| | Temperature index | 275°C [527°F] | |
| | Toxicity index | 2.5 per 100 g | |
| | Smoke index | 18 | |
| | Halogen content | None detected | |

### Low Fire Hazard Performance

#### Flammability

Current thinking on fire hazard defines the term 'Fire Risk'. This description recognizes that the risk in a fire situation is influenced strongly from several factors including, ignitability, heat release, smoke evolution and toxic gas emission together with flammability.

There are several test procedures available used to assess flammability of wires and cables. Still in widespread use is Limiting Oxygen Index (LOI), but it is now generally recognized that because the test is conducted on a single specimen (of cable jacket or wire) in laboratory conditions, the results are, at best, only weakly correlated to actual fire situations. Critical Temperature Index (CTI), is a related test and assesses performance at elevated temperature but nevertheless it is still conducted on a single specimen. The most common flammability tests for a single wire specimen is the 60˚ flame test as defined by AS81044 and FAR Part 25.More recent evidence and thinking places significantly greater importance on large scale flammability tests, such as IEC IEEE 383 or UL1685, in which the sample consists of a tray of wires. These tests predict more accurately the likely behavior of cables in actual fire scenarios. Raychem Zerohal cable jackets give very good results in small scale laboratory based tests (e.g. LOI, CTI) and Zerohal cables perform very well in large scale tests (e.g. IEEE 383 or UL1685). Overall Zerohal jacketed cables have been shown to exhibit excellent flammability characteristics.

#### Corrosivity

Under fire conditions, polymers containing halogens, sulphur and phosphorous all form corrosive acid gases or liquids. These acids can then attack items such as printed circuit boards, connectors, control relays and metal structures, including steel reinforcement bars embedded in concrete.

Test methods to evaluate corrosivity involve direct measurement of the amount of acid gas produced during pyrolysis, eg to MIL-DTL-24640 Acid Gas Generation or measurement of pH and electrical conductivities of solutions.

#### Toxicity Index

The various gases given off by combustion of polymeric materials are toxic to differing degrees.

The Def Stan 02-713, assesses the concentration of each of the possible by-products and, by measuring the amounts of these materials, a Toxicity Index is assigned.

Zerohal jacket material has a typical Toxicity Index of 1.7, compared to a typical value of 6 for CSP and 20 for PVC jacketed cable. The Def. Standard 61-12 Part 31 specification requirement for a cable jacket is <5.

#### Smoke

The problems of classifying flammability and corrosive gas generation equally apply to measuring smoke generation. The method accepted by most authorities involves the use of the NBS smoke chamber where optical density of the chamber's atmosphere is constantly measured during pyrolysis.

The 10% visibility line indicates the density of smoke which would cause human disorientation and confusion. The rate of change of smoke density can be summarized to a single numerical value, as in Def. Standard 02-711, to give a smoke index for a material and thus offers simple comparison of materials performance.

## Zerohal (Continued)

### Navy Applications

### 37 Component Cable Comparison

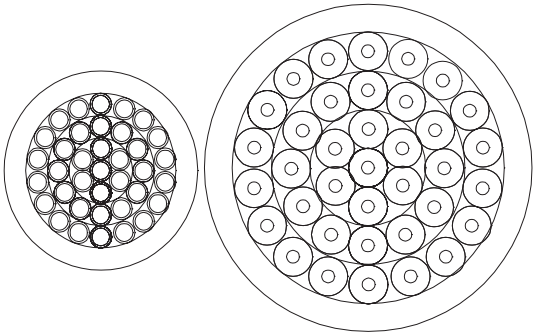

TE Competition

| | TE Cable to Def Stan 61-12 Pt25 | Cable to DGS 212 |
|---|---|---|
| Diameter | 12.5 mm (nom.) | 21.3 mm |
| Weight | 328 g/m (nom.) | 526 g/m |
| Conductor | 0.60 mm² (nom.) | 0.5 mm² |

Ships are becoming smaller and more sophisticated, with an ever increasing complexity of electronic systems, sensors and weapons. As technology advances shipbuilders are called upon to update and modify existing systems or fit completely new ones. The proliferation of electronic hardware requires more and more communication systems to transfer data from one place to another. To provide all the necessary interconnections, hundreds of multicore cables have to run throughout the ship. These, along with cables for power, lighting and other basic services, create a severe space problem within ducts and hangers.

For the vessel to achieve maximum speed, maneuverability and range, it is vital to keep the “top weight” to a minimum and since most of the equipment is located on the upper decks, system weight must be kept as low as possible.

The diagram shows a lightweight cable compared with a traditional shipboard cable having the same cross-sectional area of copper. Both cables have the same number of conductors. A saving in size has been made on the insulation material, but without sacrificing the mechanical or electrical characteristics of the cable. A typical saving in cable tray volume could be as high as 40%. Lightweight cables can also save in excess of twenty tons on a typical frigate and three to five tons on a fast patrol boat.

TE lightweight, small size cables are giving reliable service in frigates, corvette's, fast patrol boats, hydrofoils and submarines in many major Navies.

Due to recent improvements in manufacturing, TE can now offer an even tighter tolerance of ±2.5% on cable diameter. This is well within the limits imposed by specifications such as Def Stan 61-12 part 25, MIL-DTL-24640/24643, and offers significant benefits to system designers, particularly where cable glanding is involved.

Weight savings within “maxima allowed” by existing specifications are also achievable.

### Other applications

The increasing awareness of many areas of industry of the need to minimize fire hazard risk is leading to a rapid growth in the use of Zerohal jacketed cables. Applications include rail and mass transit, offshore platforms and other enclosed areas where a fire would present a significant threat to people or equipment.





Catalog 1654025
Revised 3-13

www.te.com

Dimensions are shown for reference purposes only. Specifications subject to change.

Dimensions are in millimeters unless otherwise specified.

USA: +1 800 522 6752
Asia Pacific: +86 0 400 820 6015
UK: +44 800 267 666

For additional support numbers please visit www.te.com

## Thermorad HTF/ Fluoroelastomer

### High Temperature Performance Wire and Cable Jacket Material

### Product Facts

- High temperature capability -20°C to +200°C [-4°F to 392°F]
- Excellent chemical resistance
- Flame retardant
- Continuous aircraft fuel immersion

| Available in: | |
|---|---|
| Americas | ■ |
| Europe | ■ |
| Asia Pacific | ■ |

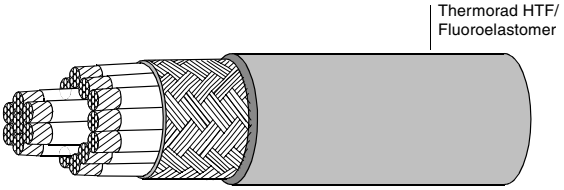


### Applications

Thermorad HTF/ Fluoroelastomer is a material specially formulated for use in applications where exceptional performance is required.

It displays excellent stability during continuous high temperature exposure to adverse chemical environments.

Thermorad HTF/ Fluoroelastomer has a continuous operating temperature of up to 200°C [392°F], and finds applications in aircraft fuel tanks and on high performance engine cables. Thermorad HTF/ Fluoroelastomer cable jackets are compatible with the Raychem high temperature harnessing systems — System 200.

### System

- System 200

### Typical Characteristics when Tested in Accordance with TE Specification WSD 51/1637

| | | | |
|---|---|---|---|
| Mechanical | Tensile strength<br>Elongation<br>Abrasion resistance (1.6 kg load)<br>Cold bend -25°C ± 3°C [-13°F] | 12 MPa<br>400%<br>40 scrapes min.<br>No cracking | |
| Thermal aging | Heat age | 168 h 250°C [482°F] | |
| | Heat shock 4 h at 300°C ± 3°C [572°F] | No cracks, drips or flowing,<br>6 mm total shrinkage in 300 mm | |
| Fluid resistance | 24 h immersion | % Retention | |
| | | Tensile strength | Elongation |
| | Diesel fuel 100°C [212°F] | 60 | 60 |
| | IRM902 oil 100°C [212°F] | 60 | 60 |
| Electrical | Insulation resistance 20°C [68°F] M ohms. km (min) | 10 | |
| Other | 45° flammability | 30 s (max) afterburn<br>100 mm (max) burn length | |
| | Vertical flammability | Self extinguishing | |



Catalog 1654025
Revised 3-13

www.te.com

Dimensions are shown for reference purposes only. Specifications subject to change.

Dimensions are in millimeters unless otherwise specified.

USA: +1 800 522 6752
Asia Pacific: +86 0 400 820 6015
UK: +44 800 267 666

For additional support numbers please visit www.te.com

## Thermorad/Thermorad F

### General Purpose Wire and Cable Jacket Material

### Product Facts

- Temperature rating -55°C to +125°C [-67°F to 257°F]
- Highly flame retardant
- Resistant to fuels, oils and greases
- UL approved

| Available in: | |
|---|---|
| Americas | ■ |
| Europe | ■ |
| Asia Pacific | ■ |

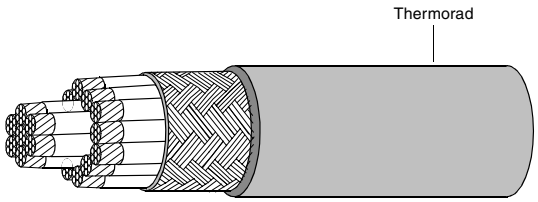


### Applications

Thermorad is a general purpose jacket material which is unaffected by most common chemicals and solvents. Thermorad is highly flame retardant and has an overall balance of physical and chemical properties.

Thermorad cables find widespread use in industrial, commercial and military applications. This includes railways, commercial vehicles, medical equipment, communication equipment and commercial electronics. Thermorad cable jackets are compatible with Raychem polyolefin tubings, molded parts and adhesives.

### Typical Characteristics when Tested in Accordance with TE Specification WCD 51/1602 (UK) and WCD 3310 (US)

| | | | |
|---|---|---|---|
| Mechanical | Tensile strength<br>Elongation<br>Abrasion resistance (1.6 kg load)<br>Cold bend | 22 MPa<br>400%<br>300 scrapes min.<br>-55°C [-67°F] | |
| Thermal aging | Heat aging 120 h, 170°C [338°F] | 60% min. retention of TS and Eb | |
| | Heat shock 4 hours at 225°C [437°F] | No cracks, drips or flowing,<br>6 mm total shrinkage in 300 mm | |
| Fluid resistance | 72 hour immersion, 50°C [122°F] | % Retention of properties | |
| | | Tensile strength | Elongation |
| | IRM 902 | 60 | 60 |
| | Skydrol® | 60 | 60 |
| Electrical | Insulation resistance 20°C [68°F]<br>M ohms km (min) | 20 | |
| Other | 45° flammability | 30 s (max.) afterburn<br>75 mm (max.) burn length | |
| | Acid gas | 4% HCl equivalent (max.) | |





Catalog 1654025
Revised 3-13

www.te.com

Dimensions are shown for reference purposes only. Specifications subject to change.

Dimensions are in millimeters unless otherwise specified.

USA: +1 800 522 6752
Asia Pacific: +86 0 400 820 6015
UK: +44 800 267 666

For additional support numbers please visit www.te.com

## Raythane, NT/Thermorad NTFR, Rayolin and AFR

### Specialized Wire and Cable Jacket Material

### Product Facts

**Modified Polyurethanes Raythane C**

- **-25°C to +80°C [-13°F to +176°F]**

**and Raythane FR**

- **-65°C to +90°C [-85°F to +194°F]**
- **Mechanically tough**
- **Can be overmolded**

**Rayolin**

- **-55°C to +95°C [-67°F to +203°F]**
- **XL or U-XL are available**
- **Excellent long term water immersion**
- **Can be overmolded**
- **Compatible with TE under-water cable splices**

**NT (US designation Thermorad NTFR)**

- **-55°C to +90°C [-67°F to +194°F]**
- **Extreme flexibility**
- **Highly flexible at low temperatures**

**AFR**

- **-40°C to +105°C [-40°F to +221°F]**
- **Abrasion resistant**
- **Fuel resistant**
- **Flame retardant**

### Applications

In addition to the preferred cable jacket materials, TE offers a variety of Raychem cable jackets for specialized applications. For example, specialized materials are available for extreme low temperature flexibility or for enhanced abrasion resistance, or non-cross-linked materials for cable splicing or overmolding.

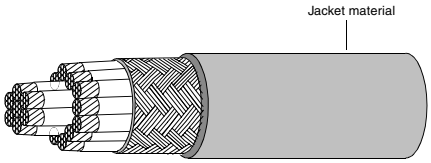


| Available in: | |
|---|---|
| Americas | ■ |
| Europe | ■ |
| Asia Pacific | ■ |

### Typical Characteristics when Tested in Accordance with TE Specification WCD

| | | WCD51/1625 Raythane C | WCD3310 Raythane FR | WCD51/147/WCD3314 NT/Thermorad NTFR | WCD51/1601 Rayolin | WCD51/1619 AFR | SPEC 44/ ASC 15865 Thermorad K | SPEC 55 Thermorad HT |
|---|---|---|---|---|---|---|---|---|
| | Tensile strength (MPa) | 40 | 28 | 17 | 19 | 11 | 20 | 34 |
| Mechanical | Elongation (%) | 500 | 500 | 300 | 250 | 150 | 400 | 100 |
| | Abrasion resistance (1.6 kg load) | 500 scrapes | 500 scrapes | 30 scrapes | 300 scrapes | 200 scrapes | Very good | Very good |
| | Cold bend | -25°C [-13°F] | -15°C [5°F] | -55°C [-67°F] | -55°C [-67°F] | -40°C [-40°F] | Pass | Pass |
| Thermal aging | Endurance (10000 h) | 80°C [176°F] | 90°C [194°F] | 90°C [194°F] | 95°C 203°F] | 105°C [221°F] | N/A | N/A |
| Fluid resistance | 24 h immersion Diesel fuels 50°C [122°F] | Excellent | Excellent | Good | — | Good | Excellent | Excellent |
| | Skydrol® 50°C [122°F] | — | — | Excellent | Excellent | Excellent | — | — |
| | Lubricating Oil 50˚C [122˚F' | — | — | — | — | — | Excellent | Excellent |
| | IRM 902 100°C [212°F] | Excellent | Excellent | Good | Good | Good | — | — |
| Electrical | Insulation resistance 20°C [68°F] M ohms. km (min) | 1 | 1 | 5 | 100 | 100 | — | — |
| Other | 45° flammability | Pass | Pass | Pass | — | Pass | Pass | Pass |



Catalog 1654025
Revised 3-13

www.te.com

Dimensions are shown for reference purposes only. Specifications subject to change.

Dimensions are in millimeters unless otherwise specified.

USA: +1 800 522 6752
Asia Pacific: +86 0 400 820 6015
UK: +44 800 267 666

For additional support numbers please visit www.te.com

## NBC

### Product Facts

- **Temperature rating: Thermorad 770: -55˚C to 150˚C Thermorad 780: -55˚C to 175˚C Thermorad 790: -65˚C to 200˚C**
- **Tested in live agent test with HD, VX and TGD for interior and exterior exposure**
- **Tested in accordance with Army TOP 8-2-510 for NBC comtamination survivability**
- **Tested to SC-X15111 and SC-X15112 fluid resistance requirements for commonly used military vehicle fluids**
- **Super Tropical Bleach (STB) and Decontamination Standard #2 (DS2), were used per TOP 8-2-511 to decontaminate specimens at interior (1 g/m$^2$) and exterior (10 g/m$_2$) exposure levels, respectively**

### Applications

Thermorad 770/780/790 Jacket Material for applications requiring Nuclear Biological and Chemical contamination survivability (NBCCS).

Thermorad 770/780/790 is a revolutionary new fluroelastomer material that is resistant to nuclear, chemical, and biological threats. This material has undergone testing and show resistance to levels as listed above.

Thermorad 770/780/790 cables are ideal for military ground vehicle applications, communication equipment, and any other equipment that may be at risk of exposure while in theater.

They are ideal for use in NBC decontamination stations. Thermorad 770/780/790 jackets are compatible with TE Raychem brand tubing and molded parts.

### System

System 700





Catalog 1654025
Revised 3-13

www.te.com

Dimensions are shown for reference purposes only. Specifications subject to change.

Dimensions are in millimeters unless otherwise specified.

USA: +1 800 522 6752
Asia Pacific: +86 0 400 820 6015
UK: +44 800 267 666

For additional support numbers please visit www.te.com

## NBC (Continued)

### Typical Characteristics when Tested in Accordance with:

| | | RT 770<br>Thermorad 770 | RT 780<br>Thermorad 780 | RT 790<br>Thermorad 790 |
|---|---|---|---|---|
| Mechanical | Tensile strength (MPa)<br>Elongation (%)<br>Abrasion resistance<br>Cold bend -55˚C [122˚F] | 35<br>500<br>Very Good<br>Pass | 24<br>350<br>Very Good<br>Pass | 30<br>350<br>Very Good<br>Pass |
| Thermal aging | Endurance 250˚C [482˚F] for 336 hrs. | Pass | Pass | Pass |
| Fluid resistance | 24 h immersion | | | |
| | Diesel fuels 23°C [73°F] | Excellent | Excellent | Excellent |
| | Lubricating oils 50°C [122°F] | Excellent | Excellent | Excellent |
| | Decontaminating agent 23˚C [73˚F] | Excellent | Excellent | Excellent |
| | JP-8 23˚C [73˚F] | Excellent | Excellent | Excellent |
| Electrical | Volume Resistivity (ohms-cm) | 21.50E+15 | 6.20E+15 | 1.20E+16 |
| Other | 45° flammability | Pass | Pass | Pass |



Catalog 1654025
Revised 3-13

www.te.com

Dimensions are shown for reference purposes only. Specifications subject to change.

Dimensions are in millimeters unless otherwise specified.

USA: +1 800 522 6752
Asia Pacific: +86 0 400 820 6015
UK: +44 800 267 666

For additional support numbers please visit www.te.com

## Electrical Shielding

### Interference — Designing for the Threat

**Available in:**

| | |
|---|---|
| Americas | ■ |
| Europe | ■ |
| Asia Pacific | ■ |

### Applications

In many applications, shielding of cables is important, whether it be to minimize cross-talk within the cable, to prevent interference from external sources, or to eliminate radiation from the cable itself.

The design of cables to provide effective shielding over a broad frequency spectrum is complex, and cables must be tailored to specific electromagnetic environments. From simple aluminized polyester film that provides electrostatic shielding to progressively more complex shielding that can be designed incorporating plated copper braids and Mu metal wraps.

### Optimization

Performance of conventional braiding can be significantly improved by computer optimization. This tightly controlled process can give many times the shielding performance of a basic braided shield with minimal weight penalty or increase in optical coverage. Supershielded cables combine Mu metal wraps with optimized braids to provide even further enhanced performance, especially at low frequencies.

### Available Shields

| Shield type | Construction | Typical Application |
|---|---|---|
| Aluminized Polyester | 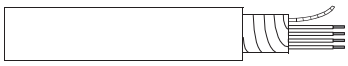 | Electrostatic shielding |
| Single Braid | 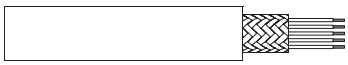 | Low level EMI<br>Low sensitivity |
| Single Optimized Braid | 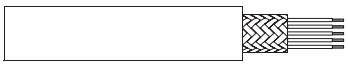 | Sensitive lines<br>High EMI |
| Double Optimized Braid | 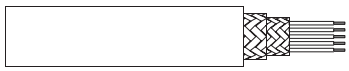 | Highly sensitive lines<br>Severe EMI |
| Supershielded | 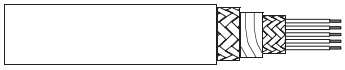 | EMP/Tempest |
| Double Supershielded | 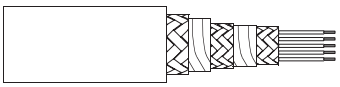 | Severest of applications |

## Electrical Shielding (Continued)

### Measuring Shielding Efficiency

#### Surface Transfer Impedance (Zt)

To assess the effectiveness of a shield, TE has adopted the line injection method as described in IEC 1196-1 to measure the surface transfer impedance (Zt) of a cable shield. This relates the open circuit voltage generated on a component wire inside the cable to the current injected on the overall shield. The unit of Zt is Ohms per meter, thus the voltage coupling is length dependent and long cables exhibit more leakage than similar but shorter length ones. To determine the surface transfer impedance across a range of frequencies, a drive signal is generated by the internal tracking generator of a spectrum analyzer, and amplified. The voltage is induced on the center conductor of the sample which is amplified and returned to the signal generator for measurement. The understanding of leakage mechanisms has enabled TE to design cables with guaranteed minimum Zt values for the desired operating environment.

### Supershielding

#### EMP Hardened Cables

The requirements for nuclear hardened cables present the engineer with a range of problems. The waveform of the EMP is such that the majority of power is dissipated in a frequency band between 1 KHz and 5 MHz, where little protection is given by conventionally shielded cables. TE has solved this problem with a range of supershielded cables which give shielding performance at these frequencies by incorporating materials which change the inductance of the shield and lower the transfer impedance. TE supershielded cables have a sandwich construction of Mu metal tapes between optimized braids. Mu metal is a ferro-magnetic material which has a high permeability over a wide range of field strengths. It is applied to the cable in a way which maintains cable flexibility and minimizes work hardening and any consequent reduction in permeability. Supershielded cables not only give protection against EMP but also other major interference modes.

### Shielded Cables

#### Controlling the Threat

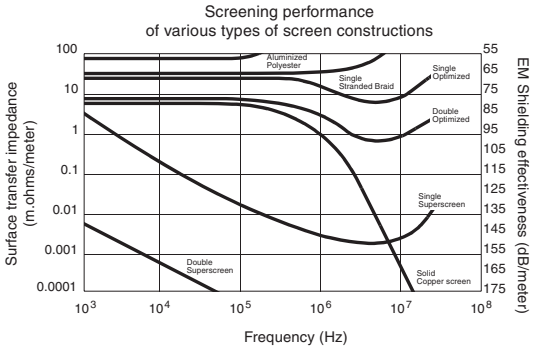


#### Testing

TE EMC test facilities have the capability for bulk current injection testing in addition to surface transfer impedance measurements. The installation is a proven facility in characterizing new design parameters.

#### Design and Manufacturing Expertise

The problems of shielding cables are complex. However, with the introduction of optimized braids and supershielded cables, TE has the capability to solve the most difficult shielding problems. Shielding of cables without degrading cable flexibility can be provided for coaxial and multiconductor cables for all EMC and EMP conditions. To complement this range of cables, TE manufactures Raychem cable terminations and connector back fittings to give total interconnection system shielding performance.



Dimensions are shown for reference purposes only. Specifications subject to change.

Dimensions are in millimeters unless otherwise specified.

USA: +1 800 522 6752
Asia Pacific: +86 0 400 820 6015
UK: +44 800 267 666

For additional support numbers please visit www.te.com

## Power Cables

### Product Facts

- Choice of jacket materials
- -65°C to +260°C [-85°F to +500°F]
- Size and weight savings
- Excellent flexibility
- Resistance to solvents and chemicals
- Corona resistance
- Increased flexibility in installation
- Arc-resistance of materials

Each power cable offers particular advantages for specific applications and is also available in multiconductor constructions and shielded and jacketed versions. Cables offer size and weight savings, good resistance to abrasion and cut-through, and the ability to operate in difficult environments.

| Available in: | |
|---|---|
| Americas | ■ |
| Europe | ■ |
| Asia Pacific | ■ |

### Applications

TE offers a range of flexible Raychem power cables that are insulated and jacketed using materials that provide improved performance over other materials, such as CSP/EPR, silicone, or PCP/Butyl. Five different types of cable are available:

**Type TR** is a general purpose, single-wall, 125°C [257°F] construction normally specified for use inside cabinets in protected areas.

**Type ZHI** is a halogen-free 105°C [221°F] cable with good oil resistance. It is particularly suitable for use in offshore, ship, and mass transit applications where low-fire-hazard performance is required. Refer to TE specification WCD 2015.

**Type AFR** is a 105°C [221°F], single-extrusion, abrasion-resistant, flame- and fuel-resistant,radiation-crosslinked polyolefin.

**Type FTR** is a dual-wall, 125°C [257°F], diesel-oil-resistant cable originally developed for tank engine compartment applications. It meets the German BWB VG 95218 specification. Refer to TE specification WCD 2002. (US Alternative Type 10603)

**Type ZHPCG** is a halogen-free, 115°C [239°F] cable with good oil resistance and resistance to water. It is particularly suitable to the Mass Transit, Marine and Off-Shore industries where its low fire hazard performance and flexibility are key to a successful installation. Refer to TE Specification WSD 1265. (US Alternative Type 2HPC06XT and 2HPC20XT)

**Type 80** Flexible Light Weight Aluminum Power Feeders are designed with a dual wall flexible ETFE (±175˚C) insulation based system to allow the cable to be bent and routed in extremely tight areas with no wrinkling or cracking of the insulation. The design has been tested to verify that it meets key aerospace industry requirements of flexibility, corona resistance and wrinkling in high voltage applications. TE also has the facilities to test corona resistance or production wire and cable at 400 Hz and various altitudes. (Contact TE for more information)

**Type Superflex** is a 260˚C rated fluoropolymer insulation based system. The need for a combination of high temperature and high performance in wire insulation has become a critical factor in today's platforms. This is especially true in large diameter power feeder applications where temperature and durability are key. TE new product line offering comes rated at 200˚C for 10 K hours. (Contact TE for more information)





Catalog 1654025
Revised 3-13

www.te.com

Dimensions are shown for reference purposes only. Specifications subject to change.

Dimensions are in millimeters unless otherwise specified.

USA: +1 800 522 6752
Asia Pacific: +86 0 400 820 6015
UK: +44 800 267 666

For additional support numbers please visit www.te.com

## Power Cables (Continued)

### Specifications/Approvals*

| Series | Military | TE |
|---|---|---|
| TR | — | WCD 2003, WSD51/1602 |
| ZHI | Def. Standard 61-12 Part 31 (jacket material) | WSD 2015 |
| FTR | BWB VG 95218 Types G, H, and K | WSD 2002 |
| AFR | — | WCD 2011, WSD51/1619 |
| ZHPCG | — | WSD 1265 |
| 80 | — | SPEC 80 |
| Superflex | — | WCD 3111 |

*See specifications listed for details of performance.

### Conductors (Tinned Soft Copper)

| Conductor Size mm² | Stranding | | Max. Resistance at 20°C in Ω/km (Ω/1000 ft) Class 5/6 |
|---|---|---|---|
| | IEC Class 5 | IEC Class 6 | |
| | Nom. Dia. | Nom. Dia. | |
| 1.5 | 1.49 [.05] | 1.53 [.06] | 13.20 [4.02] |
| 2.5 | 1.90 [.07] | 2.40 [.09] | 7.82 [2.38] |
| 4.0 | 2.49 [.10] | 2.90 [.11] | 4.85 [1.48] |
| 6.0 | 3.00 [.12] | 3.60 [.14] | 3.23 [0.98] |
| 10.0 | 4.60 [.18] | 4.55 [.18] | 1.88 [0.57] |
| 16.0 | 5.70 [.22] | 5.50 [.22] | 1.19 [0.36] |
| 25.0 | 7.10 [.28] | 7.30 [.29] | 0.78 [0.24] |
| 35.0 | 8.50 [.33] | 8.55 [.34] | 0.55 [0.17] |
| 50.0 | 10.30 [.41] | 10.15 [.40] | 0.39 [0.12] |
| 70.0 | 12.40 [.49] | 12.00 [.47] | 0.27 [0.08] |
| 95.0 | 14.50 [.57] | 14.05 [.55] | 0.20 [0.06] |
| 120.0 | 16.00 [.63] | 16.30 [.64] | 0.15 [0.05] |
| 150.0 | 18.00 [.71] | 17.40 [.68] | 0.13 [0.04] |
| 185.0 | 20.00 [.79] | 20.00 [.79] | 0.10 [0.030] |
| 240.0 | 23.00 [.91] | — | 0.08 [0.024] |
| 300.0 | 26.00 [1.0] | — | 0.06 [0.018] |
| 400.0 | 30.00 [1.2] | — | 0.05 [0.015] |

*For Type 80 and Superflex, contact TE for conductor details.

### Materials Performance Summary

| Material | Tensile Strength N/mm² typical | Abrasion Resistance | Cut Through | Temperature Rating °C 10000 h | Preferred Color |
|---|---|---|---|---|---|
| TR | 20 | Excellent | Good | 125 | Black |
| ZHI | 9 | Good | Very Good | 105 | Black |
| FTR | 18 | Good | Good | 125 | Black |
| AFR | 18 | Excellent | Very Good | 105 | Grey |
| ZHPCG | 9 | Good | Good | 115 | Black |
| 80 | -21 | Very Good | Very Good | 175 | White |
| Supeflex | -14 | Very Good | Very Good | 260 | White |

Note: Where a higher operating temperature is required, TE SPEC 55 wire provides outstanding performance up to 200°C continuous operating temperature. For these or other special applications, please contact TE.



Dimensions are shown for reference purposes only. Specifications subject to change.

Dimensions are in millimeters unless otherwise specified.

USA: +1 800 522 6752
Asia Pacific: +86 0 400 820 6015
UK: +44 800 267 666

For additional support numbers please visit www.te.com

## Power Cables (Continued)

### Table 1. Nominal Diameters and Maximum Weights

| Conductor Size (mm²) | TR 16 | | | FTR 16 | | |
|---|---|---|---|---|---|---|
| | Part No. | Nom. OD in mm (in) | Max. weight in kg/km (lb/1000 ft) | Part No. | Nom. OD in mm (in) | Max. weight in kg/km (lb/1000 ft) |
| 1.5 | — | — | — | — | — | — |
| 2.5 | TR 16-2.5 | 3.9 [.15] | 34.0 [22.8] | — | — | — |
| 4.0 | -4 | 4.5 [.17] | 51.0 [34.2] | FTR 16-4 | 5.6 [.22] | 72.0 [48.4] |
| 6.0 | -6 | 5.2 [.20] | 73.0 [48.9] | -6 | 6.3 [.25] | 95.0 [63.8] |
| 10.0 | -10 | 6.2 [.24] | 117.0 [78.4] | -10 | 7.5 [.29] | 151.0 [101.5] |
| 16.0 | -16 | 7.4 [.29] | 182.0 [121.9] | -16 | 8.8 [.35] | 228.0 [153.2] |
| 25.0 | -25 | 9.3 [.37] | 274.0 [183.6] | -25 | 10.7 [.42] | 335.0 [225.1] |
| 35.0 | -35 | 10.6 [.42] | 383.0 [256.6] | -35 | 12.1 [.48] | 463.0 [311.1] |
| 50.0 | -50 | 12.5 [.49] | 542.0 [363.1] | -50 | 14.0 [.55] | 631.0 [424.0] |
| 70.0 | -70 | 14.6 [.57] | 765.0 [512.6] | -70 | 16.2 [.64] | 878.0 [589.9] |
| 95.0 | -95 | 17.0 [.67] | 1020.0 [683.4] | -95 | 18.8 [.74] | 1170.0 [786.1] |
| 120.0 | — | — | — | -120 | 21.3 [.84] | 1481.0 [995.1] |

### Table 2. Nominal Diameters and Maximum Weights

| Conductor Size (mm²) | ZHI 15 | | | AFR 35 | | |
|---|---|---|---|---|---|---|
| | Part No. | Nom. OD in mm (in) | Max. Weight in kg/km (lb/1000 ft) | Part No. | Nom. OD in mm (in) | Max. Weight in kg/km (lb/1000 ft) |
| 1.5 | ZHI 15 -1.5 | 4.09 [.16] | 33.5 [22.4] | AFR 35-1.5 | 2.7 [.11] | 21.6 [14.5] |
| 2.5 | -2.5 | 4.69 [.18] | 48.8 [32.7] | -2.5 | 3.7 [.15] | 38.6 [25.9] |
| 4.0 | -4 | 5.49 [.22] | 72.1 [48.3] | -4 | 4.7 [.18] | 61.1 [41.1] |
| 6.0 | -6 | 6.16 [.24] | 99.8 [66.9] | -6 | 5.6 [.22] | 90.1 [60.5] |
| 10.0 | -10 | 8.20 [.32] | 159.0 [106.5] | -10 | 7.0 [.28] | 153.5 [103.1] |
| 16.0 | -16 | 9.30 [.37] | 223.0 [149.4] | -16 | 8.1 [.32] | 211.2 [141.9] |
| 25.0 | -25 | 10.90 [.43] | 331.0 [221.8] | -25 | 10.4 [.41] | 336.1 [225.8] |
| 35.0 | -35 | 12.30 [.48] | 448.0 [300.2] | -35 | 11.6 [.46] | 455.4 [305.7] |
| 50.0 | -50 | 14.70 [.58] | 631.0 [422.8] | -50 | 13.7 [.54] | 638.3 [428.9] |
| 70.0 | -70 | 16.80 [.66] | 852.0 [570.8] | -70 | 16.0 [.63] | 834.9 [561.0] |
| 95.0 | -95 | 19.10 [.75] | 1108.0 [742.4] | -95 | 18.3 [.72] | 1148.0 [771.4] |
| 120.0 | -120 | 21.00 [.83] | 1438.0 [963.5] | -120 | 20.4 [.80] | 1501.9 [1009.1] |
| 150.0 | -150 | 23.00 [.91] | 1748.0 [1171.2] | -150 | 22.6 [.89] | 1834.0 [1233.0] |
| 185.0 | -185 | 25.60 [1.01] | 2088.0 [1399.0] | -185 | 24.8 [.98] | 2177.0 [1463.0] |
| 240.0 | -240 | 28.60 [1.13] | 2705.0 [1812.4] | -240 | 27.8 [1.10] | 2817.0 [1892.0] |
| 300.0 | -300 | 32.00 [1.26] | 3363.0 [2253.2] | -300 | 32.0 [1.20] | 3579.0 [2405.0] |
| 400.0 | -400 | 36.40 [1.43] | 4396.0 [2945.3] | -400 | 36.0 [1.40] | 4636.0 [3115.0] |

### Table 3. Nominal Diameters and Maximum Weights

| Conductor Size (mm²) | ZHPCG-15 | | | ZHPCG-35 | | |
|---|---|---|---|---|---|---|
| | Part No. | Nom. OD in mm [in] | Max. Weight in kg/km [lb/1000 ft] | Part No. | Nom. OD in mm [in] | Max. Weight in kg/km [lb/1000 ft] |
| 1 | ZHPCG-15-1 | 3.77 [.14] | 28.0 [18.1] | ZHPCG-35 -1 | — | — |
| 1.5 | -1.5 | 3.79 [.15] | 36.0 [24.2] | -1.5 | 4.55 [.18] | 37.9 [25.5] |
| 2.5 | -2.5 | 4.27 [.17] | 45.0 [30.2] | -2.5 | 5.07 [.20] | 52.9 [35.5] |
| 4.0 | -4 | 4.64 [.18] | 60.0 [40.3] | -4 | 5.66 [.22] | 72.7 [48.9] |
| 6.0 | -6 | 5.31 [.21] | 85.0 [57.1] | -6 | 6.15 [.24] | 96.7 [65.0] |
| 10.0 | -10 | 6.53 [.26] | 135.0 [90.7] | -10 | 7.33 [.29] | 141.0 [94.7] |
| 16.0 | -16 | 8.03 [.32] | 195.0 [131.0] | -16 | 8.83 [.35] | 214.0 [143.8] |
| 25.0 | -25 | 9.70 [.38] | 300.0 [201.6] | -25 | 10.50 [.41] | 316.0 [212.3] |
| 35.0 | -35 | 11.30 [.44] | 443.0 [297.7] | -35 | 11.70 [.46] | 425.0 [285.6] |
| 50.0 | -50 | 13.50 [.53] | 623.0 [418.6] | -50 | 13.48 [.53] | 582.0 [391.0] |
| 70.0 | -70 | 15.60 [.61] | 847.0 [569.1] | -70 | 15.33 [.60] | 802.0 [538.9] |
| 95.0 | -95 | 18.10 [.71] | 1119.0 [751.9] | -95 | 17.93 [.71] | 1051.0 [706.2] |
| 120.0 | -120 | 19.80 [.78] | 1445.0 [970.9] | -120 | 19.80 [.78] | 1308.0 [878.8] |
| 150.0 | -150 | 22.00 [.87] | 1775.0 [1192.7] | -150 | 21.44 [.84] | 1601.0 [1075.7] |
| 185.0 | -185 | 24.40 [.96] | 2115.0 [1421.2] | -184 | 23.28 [.92] | 1966.0 [1321.0] |
| 240.0 | -240 | 27.80 [1.09] | 2762.0 [1856.0] | -240 | 27.33 [1.08] | 2542.0 [1708.0] |
| 300.0 | -300 | 31.20 [1.23] | 3452.0 [2320.0] | -300 | 32.50 [1.28] | 3568.0 [2397.3] |
| 400.0 | -400 | 35.20 [1.39] | 4474.0 [3006.4] | -400 | 37.00 [1.46] | 4652.0 [3125.7] |







Dimensions are shown for reference purposes only. Specifications subject to change.

Dimensions are in millimeters unless otherwise specified.

USA: +1 800 522 6752
Asia Pacific: +86 0 400 820 6015
UK: +44 800 267 666

For additional support numbers please visit www.te.com

## Power Cables (Continued)

### Part Numbering System

**XXX XX - XX - X**

**Standard Colors**
0 = Black 8 = Gray

**Conductor Cross Section**
(1.5 to 400 mm2)

**Conductor Type**
5 = IEC Class 5 - Flexible 6 = IEC Class 6 - Very flexible

**Voltage Rating**
1 = 600/1000 V
3 = 1900/3300 V

**Insulating Type**
TR
FTR
ZHI
AFR
ZHPCG

*For Type 80 and Superflex, contact TE for conductor details.

**Part Numbering System is a cross reference only and not meant for part creation.**



Dimensions are shown for reference purposes only. Specifications subject to change.

Dimensions are in millimeters unless otherwise specified.

USA: +1 800 522 6752
Asia Pacific: +86 0 400 820 6015
UK: +44 800 267 666

For additional support numbers please visit www.te.com

## Table of Contents

TE Connectivity application equipment is designed and engineered specifically for installation of Raychem brand heat-shrinkable products. These tools provide the optimal heating temperatures, performance, and control features for maximum production efficiency.


**AA-400 Super Heater**
Compressed-air heating tool . . . . . 10-2
**AD-1319-9**
Holding fixture tool . . . . . 10-3
**AD-1377, AD-1522, AD-1381**
Hand-operated crimp tools . . . . . 10-4
**AD-3050-SEAL-TEST-EQUIP**
Seal test equipment Splice sealing and connector sealing evaluation - various products . . . . . 10-5, 10-6
**AD-5000 and RH-396X**
Tinel-Lock installation tool Tinel-Lock screened termination products . . . . . 10-7, 10-8
**AD-5010-Tinel-Bench-230V**
Tinel-Lock installation tool Tinel-Lock screened termination products . . . . . 10-9, 10-10
**CV-1981, CV-1983**
Heavy-duty hot-air heating tools . . . . . 10-11, 10-12
**HL2010E/HL1910E**
Steinel® general purpose hot-air heating tool . . . . . 10-13, 10-14
**IR-1891**
Shuttle machine - twin workstation heater for multiple installation of short length tubing products . . . . . 10-15, 10-16
**IR-550 Mark II**
Infrared heating tool . . . . . 10-17
**IR-1759 MiniRay**
Infrared heating tool . . . . . 10-18 to 10-21
**Model 16B**
Belt heater . . . . . 10-22, 10-23
**Model 19**
Conveyor heater for processing Raychem brand heat-shrinkable tubing and terminating devices . . . . . 10-24, 10-25
**Model 81CE**
Discrete heater . . . . . 10-26, 10-27
**Model 105**
Tunnel oven . . . . . 10-28, 10-29
**RBK-ILS-Processor MkII**
Installation of splice sealing products adjacent to ultrasonic welder . . . . . 10-30, 10-31
**ThermoGun HG**
Hot-air heating tool . . . . . 10-32, 10-33


**Note:** Users should independently evaluate the suitability of the product for their application. Before ordering, check with TE for most current data.

Steinel is a trademark of Steinel GmbH.





Catalog 1654025
Revised 3-13

www.te.com

Dimensions are shown for reference purposes only. Specifications subject to change.

Dimensions are in millimeters unless otherwise specified.

USA: +1 800 522 6752
Asia Pacific: +86 0 400 820 6015
UK: +44 800 267 666

For additional support numbers please visit www.te.com

## AA-400 Super Heater Compressed-Air Heating Tool

### Product Facts

- **Automatic power cut-off switch to protect heating element if air flow is interrupted**
- **Pressure regulator and gauge for adjusting air flow and temperature**
- **Indicator light that goes on when power is applied to heating element**
- **Very focused heat**
- **Wide variety of reflectors available**
- **Excellent tool for small items and confined areas**

### Applications

Used for installing heat-shrinkable tubing in multiple applications. Excellent for installing SolderSleeve devices (wire-to-pin applications) and SolderTacts contacts.

### Specifications

| Utility Requirements | |
|---|---|
| Electrical | 120-V model: 120 Vac, 4 A, 50–60 Hz<br>240-V model: 240 Vac, 2 A, 50–60 Hz |
| Air (oil free) | 60 psig minimum, 5 cfm |

### Ordering Information

| Model | Voltage | Description | Part No. |
|---|---|---|---|
| AA-400 Super Heater with stand, needlepoint tip, | 120 Vac | AA-400-32-Mk3 (110V) | 582602-000 |
| Mini SolderSleeve reflector, and input air filter | 240 Vac (CE version) | AA-400-200-CE-SUPERHTR | 281917-000 |

| Accessories and Replacement Parts* | Part No. | Description | NSN Stock No. |
|---|---|---|---|
| SolderSleeve reflector | 979646-000 | AA-400-94-SLD-SLV-TIP-KIT | 4940-00-609-4993 |
| Needlepoint tip | 979647-000 | AA-400-96 | 4940-00-148-9847 |
| Boot and tubing tip | 979691-000 | AA-400-101 | 4940-00-148-9848 |
| Mini SolderSleeve reflector | 979663-000 | AA-400-102 | 4940-01-043-7634 |
| Low-flow tip | 979672-000 | AA-400-103 | 3439-01-173-8810 |
| Heating Element replacement kit, 120 V | 013750-000 | AA-400-128 | — |
| Heating Element replacement kit, 240 V (CE) | 444179-000 | AA-400-228-EL-KT-240V-CE | — |
| Stand | 979649-000 | AA-400-09 | — |
| Input air filter | 979673-000 | AA-400-P-Y-92-Filter | — |
| Air hose replacement kit | 156553-000 | AA-400-136 | — |
| Gun and air hose replacement kit | 238231-000 | AA-400-229-Gun-Hse-Kit | — |

*Controller is not sold separately.

**Non CE Approved.**
**Cannot be sold in Europe.**

| Available in: | Americas | Europe | Asia Pacific |
|---|---|---|---|
| | ■ | | ■ |



Catalog 1654025
Revised 3-13

www.te.com

Dimensions are shown for reference purposes only. Specifications subject to change.

Dimensions are in millimeters unless otherwise specified.

USA: +1 800 522 6752
Asia Pacific: +86 0 400 820 6015
UK: +44 800 267 666

For additional support numbers please visit www.te.com

## Holding Fixture Tool AD-1319-9

### Product Facts

- **AD-1319-9 comes with two lateral wire clamps as standard**
- **Secures wire or cable, enabling easy installation of products**

### Applications

Simplifies and speeds installation of Raychem brand SolderSleeve terminators or splices and SolderTacts shielded contacts.

### Specifications and Dimensions

| | |
|---|---|
| Dimensions | 18 cm [7.07 in] W x 15 cm [5.91 in] L |
| Weight | 300 g [.67 lb] |

| Product Range Covered | |
|---|---|
| SolderSleeve splices | MiniSeal, CWT-9XXX, D-1744, D-110 |
| Shield terminators | D-100-XX |
| SolderTacts contacts | D-602-XX |

### Ordering Information

| Model | Description | Part No. |
|---|---|---|
| Holding fixture | AD-1319-9 | 993850-000 |
| 38999 size 8 SolderTacts adapter | AT-1319-22 | 395241-000 |
| 38999 size 16 SolderTacts adapter | AT-1319-78 | 413186-000 |
| Submin SolderTacts adapter | AT-1319-12 | 993872-000 |
| 748 SolderTacts adapter | AT-1319-14 | 993877-000 |
| 723 SolderTacts adapter | AT-1319-19 | 993938-000 |
| 482 size 16 SolderTacts adapter | AT-1319-17 | 993917-000 |

Note: Additional tooling for SolderTacts can be found under SolderTacts contacts, see section 8.

| Available in: | Americas | Europe | Asia Pacific |
|---|---|---|---|
| | ■ | ■ | ■ |





Catalog 1654025
Revised 3-13

www.te.com

Dimensions are shown for reference purposes only. Specifications subject to change.

Dimensions are in millimeters unless otherwise specified.

USA: +1 800 522 6752
Asia Pacific: +86 0 400 820 6015
UK: +44 800 267 666

For additional support numbers please visit www.te.com

## Hand-Operated Crimp Tools AD-1377, AD-1522, AD-1381

### AD-1377, AD-1522, AD1381

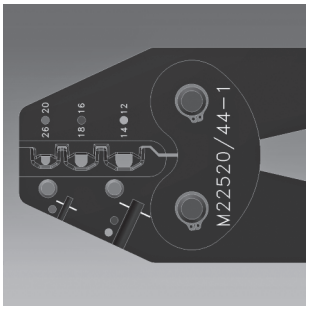


**AD-1377 Crimp Tool**

The AD-1377 crimp tool fits all MiniSeal crimp barrels. It also meets MIL specification M22520/37-01. A calibration verification gauge, AD-1386, is also available for the AD-1377. The gauge meets MIL specification M22520/39-01.

**AD-1522 Crimp Tool**

The AD-1522 crimp tool crimps all DuraSeal crimp and PolyCrimp products. It has a preset crimp depth that provides the optimum combination of tensile strength and insulation integrity in the finished splice.

**AD-1381 Crimp Tool**

The AD-1381 crimp tool is used in conjunction with our cold applied gel filled crimp splices. The AD-1381 is currently under qualification per M22520/44-01. A calibration verification gauge AD-1382 is also available for the AD-1381. The gauge is currently under qualification per M22520/39-03.

AD-1381 crimp tool **must be** used for proper installation of the Cold Applied Crimp Devices.

### Ordering Information

| Model | Description | Part No. |
|---|---|---|
| AD-1377 MiniSeal crimp tool | AD-1377-CRIMP-TOOL | 992008-000 |
| AD-1386 Calibration gauge | AD-1386-CALIBRATION-GAUGE | 992013-000 |
| AD-1522 DuraSeal crimp tool | AD-1522-1-CRIMPING TOOL | 047011-000 |
| AD-1381 Crimp tool | AD-1381-CRIMP-TOOL-3-CVTY | CS1660-000 |

| Available in: | Americas | Europe | Asia Pacific |
|---|---|---|---|
| | ■ | ■ | ■ |



Catalog 1654025
Revised 3-13

www.te.com

Dimensions are shown for reference purposes only. Specifications subject to change.

Dimensions are in millimeters unless otherwise specified.

USA: +1 800 522 6752
Asia Pacific: +86 0 400 820 6015
UK: +44 800 267 666

For additional support numbers please visit www.te.com

## AD-3050-SEAL-TEST-EQUIP

### Seal Test Equipment Splice Sealing and Connector Sealing Evaluation – Various Products

### Product Facts

- **Simple fixture design allows fast sealing test result assisting determination of installation conditions for splice sealing products**
- **Connector fixture adapter allows connector sealing verification**
- **Strong portable container allows use in various locations**

### Applications

The AD-3050-SEAL-TEST-EQ-NC is a manually operated pneumatic device, intended for use as a convenient 'in-process' sampling technique for checking sealed splices. Different combinations of in-line or stub splices can be pressure tested in any of the combination of fixtures (8 in total). There is also a facility to allow leak testing of various connectors.

TE UK has seen good correlation between results obtained with the AD-3050 and those obtained through water immersion testing. However testing in accordance with the OEM specification is the only guaranteed way of confirming that the OEM spec is being met. The splice products are located in clamps which deliver the test pressure. The product is immersed in water and pressure is delivered down the wire(s) to the sealed area.The test result is determined visually by looking for bubbles in the area of the sealing product.

Use of this equipment is described in TE UK procedure, reference No. PIP/017/95. This equipment can also check for poke through i.e. where individual wire strands poke through the installed heat-shrinkable sleeve by using the AD-3050-SEAL-POKE-IND. Poke through is eliminated by ensuring correct welding and subsequent handling conditions.

| Available in: | Americas | Europe | Asia Pacific |
|---|---|---|---|
| | ■ | ■ | ■ |





Catalog 1654025
Revised 3-13

www.te.com

Dimensions are shown for reference purposes only. Specifications subject to change.

Dimensions are in millimeters unless otherwise specified.

USA: +1 800 522 6752
Asia Pacific: +86 0 400 820 6015
UK: +44 800 267 666

For additional support numbers please visit www.te.com

## AD-3050-SEAL-TEST-EQUIP (Continued)

### Seal Test Equipment Splice Sealing and Connector Sealing Evaluation – Various Products
(Continued)

### Technical Specification

| | |
|---|---|
| Pneumatic Supply | 6 bar maximum, filtered supply.<br>2 bar test pressure maximum.<br>(Test pressure typically 0.5 bar) |
| Machine Cycle Times for seal testing: | Typically 1 minute |
| Total System Noise: | Negligible noise from air test |
| Dimensions: | 550 x 350 x 215 [22 x 14 x 8 in]<br>(Excludes packing case) |
| Weight: | 4 Kg (8.80 lb)<br>(Excludes packing case) |
| | 9.6 Kg (21.20 lb)<br>(Includes packing case) |

### Ordering Information

| | Description | Part No. |
|---|---|---|
| Seal Test Equipment | AD-3050-SEAL-TEST-EQ-NC | C82893-000 |

### Accessories

| | Description | Part No. |
|---|---|---|
| Tool Case | AD-3050-SEAL-TEST-CASE-ONLY | F66989-000 |
| Splice Poke-through Indicator | AD-3050-SEAL-POKE-IND | E63259-000 |

### Recommended Spares

| | Description | Part No. |
|---|---|---|
| Set of 8 Seals** | AD-3050-SEAL-8-KIT | 299155-000 |
| Clamp assembly including seals | AD-3050-SEAL-CLAMP-ASSY | 168927-000 |
| Sealing tape | EPDM foam, 6 mm x 9 mm,<br>with acrylic adhesive backing. | — |

** Full set of seals



Catalog 1654025
Revised 3-13

www.te.com

Dimensions are shown for reference purposes only. Specifications subject to change.

Dimensions are in millimeters unless otherwise specified.

USA: +1 800 522 6752
Asia Pacific: +86 0 400 820 6015
UK: +44 800 267 666

For additional support numbers please visit www.te.com

## AD-5000 and RH-396X Tinel-Lock Installation Tool
## Tinel-Lock Screened Termination Products

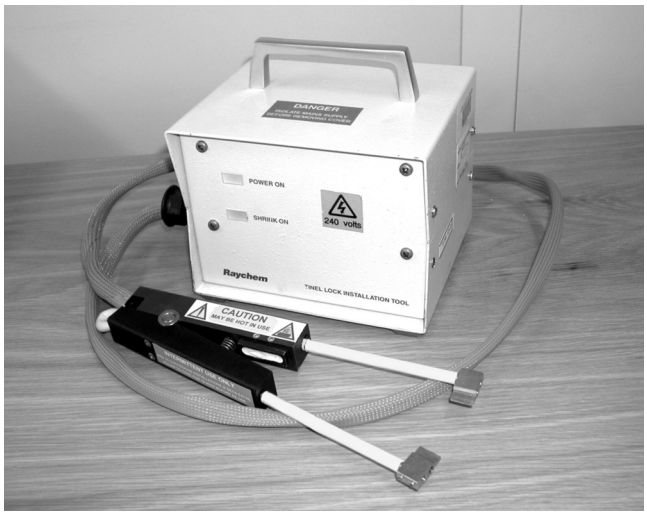


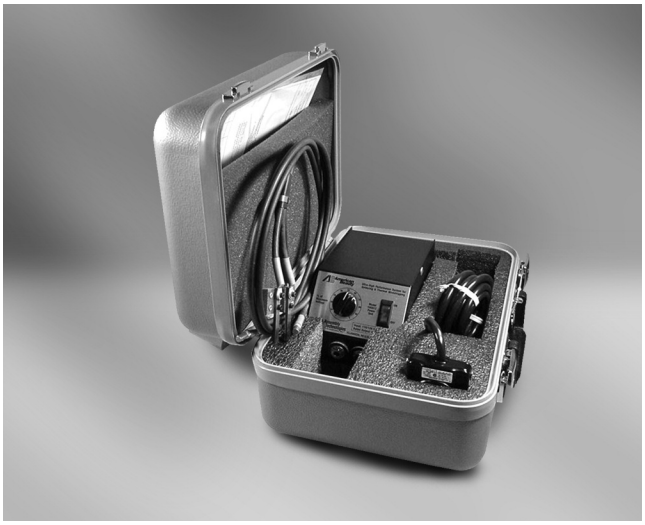

### Applications

The AD-5000-TINEL-ASSY is a manually operated resistance heating tool designed specifically to install Tinel-Lock ring screened terminations in small batches. Recommended maximum continuous batch is 15, 6 second installations. The standard tool accommodates Tinel Rings from size TR04 to TR24 inclusive.

Various electrode (jaws) types can be used to install other Tinel-Lock ring sizes and types. The operator uses the hand-held tool to install the Tinel-Lock ring in its correct position on screened terminations. The Tinel-Lock ring has two patches of thermochromic paint on the Tinel-Lock ring.

The operator positions the Tinel-Lock ring on the terminations, with at least one of the patches of thermochromic paint visible. The Tinel-Lock ring is then clamped in the jaws to start the installation. Installation is complete when the thermochromic paint turns black.

| AD-5000 available in: | Americas | Europe | Asia Pacific |
|---|---|---|---|
| | ■ | ■ | ■ |

| RH-396X available in: | Americas | Europe | Asia Pacific |
|---|---|---|---|
| | ■ | | ■ |





Catalog 1654025
Revised 3-13

www.te.com

Dimensions are shown for reference purposes only. Specifications subject to change.

Dimensions are in millimeters unless otherwise specified.

USA: +1 800 522 6752
Asia Pacific: +86 0 400 820 6015
UK: +44 800 267 666

For additional support numbers please visit www.te.com

## AD-5000 and RH-396X Tinel-Lock Installation Tool
## Tinel-Lock Screened Termination Products (Continued)

### Technical Specification

| | |
|---|---|
| Electrical Supply | 220V-240V-50Hz |
| Machine Cycle Times for Tinel-Lock rings used on typical range of harnesses: | 5 to 15 Seconds depending on ring size and braid type on the termination. |
| Mains Fuse | 240 V 2 Amp (Type T anti - surge) |
| Total System Noise | Silent Operation |
| Dimensions | 340 x 320 x 170 mm [13.4 x 13 x 6.7 in] |
| Weight | 4.2 Kg |

### Product Range

| | Tinel-Lock Rings |
|---|---|
| STANDARD ELECTRODES FITTED : | Sizes TRO4 to TR24 |
| Conduit Electrodes Fitted | Conduit systems / TR rings on double braid |
| Square Profile Electrodes Fitted | TC02-TC03 RINGS |

### Ordering Information

| | Description | Part No. |
|---|---|---|
| Tinel installation tool (220V-240V) | AD-5000-TINEL-ASSY | 411993-000 |
| Also available in the US and Asia Pacific:<br>Resistance heating tool: 915088-01.<br>Use with American Beauty Transformer - #105-A12 (110V) or #105-A12-220V (220V) and foot switch #10519 | | |
| Tinel installation tool (120 VAC) | RH-3960-1-TINEL-KIT-120V | 173643-000 |
| Tinel installation tool (220 VAC) | RH-3965-1-TINEL-KIT-220V | 859855-000 |

### Recommended Spares — AD-5000

| | | |
|---|---|---|
| Hand Tool Assembly | AD-5000-TINEL-HAND-TOOL | 795257-000 |
| Standard Electrodes (TR04 to TR24 RINGS) | AD-5000-TINEL-STD-ELECT | 180245-000 |
| Conduit Electrodes (Conduit systems or TR rings on double braid) | AD-5000-TINEL-COND-ELECT | 747235-000 |
| Square Profile Electrodes (TC02-TC03 RINGS) | AD-5000-TINEL-SQ-EXT-ELEC | 065583-000 |

### Recommended Spares — RH-396X

| | | |
|---|---|---|
| Hand Tool Assembly | 915088-01-TINI-RING-HEATR | 170224-000 |
| Foot Switch | IR-500-P-FOOT-SWITCH | 993702-000 |
| 120 VAC Transformer | AES-RH3960-TRNSFMR-120V | 9951119-000 |
| 220 VAC Transformer | TRNSFMR-220V-105-A12-250W | 574557-000 |

N.B. Electrodes are two per P.C.N.



Dimensions are shown for reference purposes only. Specifications subject to change.

Dimensions are in millimeters unless otherwise specified.

USA: +1 800 522 6752
Asia Pacific: +86 0 400 820 6015
UK: +44 800 267 666

For additional support numbers please visit www.te.com

## AD-5010-Tinel Bench-230V Tinel-Lock Installation Tool
## Tinel-Lock Screened Termination Products

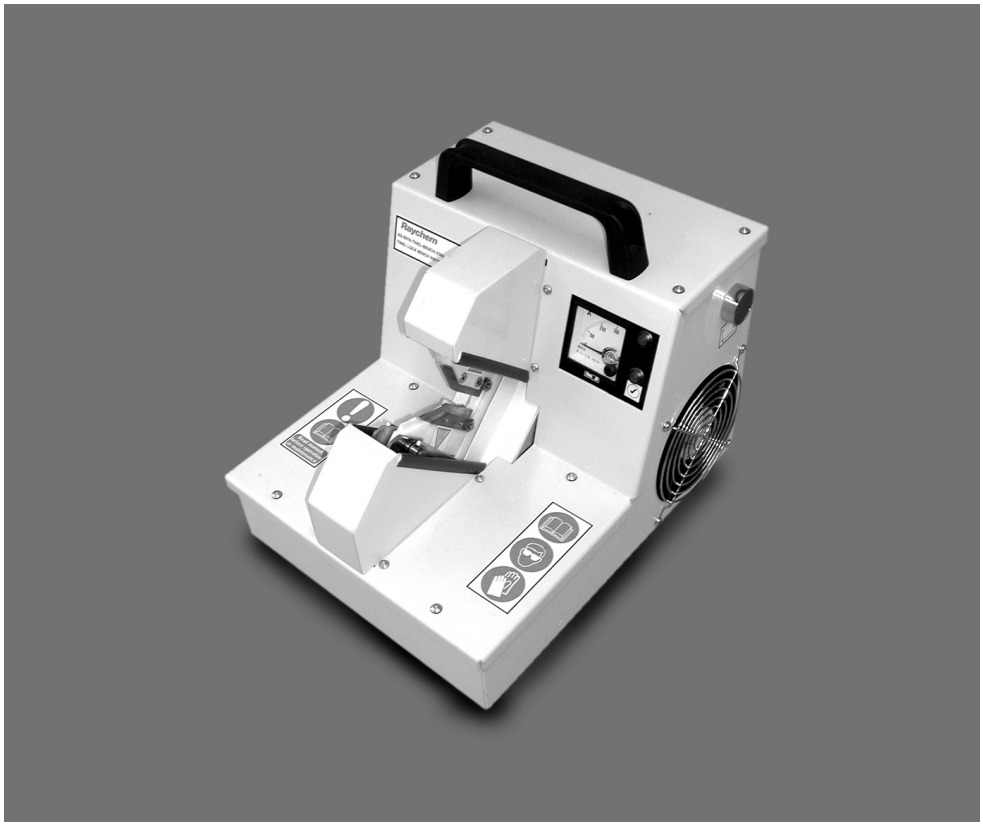


### Applications

The AD-5010-TINEL-BENCH-230V is a manually operated resistance heating tool designed specifically to install Tinel-Lock ring screened terminations in large batches, in continuous operation. The tool accommodates Tinel Rings from size TR04 to TR24 inclusive. Various electrode (jaws) types can be used to install other Tinel-Lock ring sizes and types.

The operator uses the tool to install the Tinel-Lock ring in its correct position on screened terminations. The Tinel-Lock ring has two patches of thermochromic paint to ensure consistent installation.

The operator positions the Tinel-Lock ring on the termination, with at least one of the patches of thermochromic paint visible, and operates the push-button (or footswitch if fitted).

The Tinel-Lock ring is then located in spring-loaded jaws (it is not necessary to clamp the ring manually). The push button or footswitch (if fitted) is then operated to start the cycle, the cable is held in position for the duration of the installation. This is complete when the thermochromic paint turns black. This normally takes between 3 to 12 seconds, depending on ring size, braid type etc. An ammeter on the front panel shows installation current used. A needle file is provided for periodic cleaning of the electrodes.

| Available in: | Americas | Europe | Asia Pacific |
|---|---|---|---|
| | ■ | ■ | ■ |







Dimensions are shown for reference purposes only. Specifications subject to change.

Dimensions are in millimeters unless otherwise specified.

USA: +1 800 522 6752
Asia Pacific: +86 0 400 820 6015
UK: +44 800 267 666

For additional support numbers please visit www.te.com

## AD-5010-Tinel Bench-230V Tinel-Lock Installation Tool
## Tinel-Lock Screened Termination Products (Continued)

### Technical Specification

| | |
|---|---|
| Electrical Supply | 230 V 50 Hz |
| Machine Cycle Times for Tinel-Lock rings used on typical range of harnesses: | 3 to 12 Seconds depending on ring size and braid type on the termination. |
| Mains Fuses (2) | 240 V 2 Amp (Type T anti - surge) |
| Total System Noise | Silent Operation |
| Dimensions | 245 x 305 x 290 mm [10 x 12 x 11 in] |
| Weight | 24 Kg |

### Product Range

| | Tinel-Lock rings |
|---|---|
| STANDARD ELECTRODES FITTED : | Sizes TRO4 to TR24, conduit systems and TR rings on double braid |
| Square Profile Electrodes Fitted | TC02-TC03 RINGS |

### Accessories

| | Description | Part No. |
|---|---|---|
| Footswitch Kit | AD-5010-BENCH-FOOTSW-KIT | 072845-000 |

### Recommended Spares

| | Description | Part No. |
|---|---|---|
| Standard Electrodes (TR04-TR24 RINGS) | AD-5010-BENCH-STD-ELECT | 222899-000 |
| Square Profile Electrodes (TC02-TC03 RINGS) | AD-5010-BENCH-SQ-ELECT | 727799-000 |
| Mechanism Assembly (Including electrode set) | AD-5010-BENCH-MECH | 924079-000 |

N.B Electrodes are two per P.C.N.

### Ordering Information

| | Description | Part No. |
|---|---|---|
| Tinel installation tool | AD-5000-TINEL-ASSY | 411993-000 |



Catalog 1654025
Revised 3-13

www.te.com

Dimensions are shown for reference purposes only. Specifications subject to change.

Dimensions are in millimeters unless otherwise specified.

USA: +1 800 522 6752
Asia Pacific: +86 0 400 820 6015
UK: +44 800 267 666

For additional support numbers please visit www.te.com

## CV-1981 and CV-1983 Heavy-Duty Hot-Air Heating Tools

### Product Facts

- **Robust, double-insulated, heavy-duty unit**
- **Highest-wattage unit (1600–2260 watts)**
- **Integral stand that allows use as bench tool**
- **Safe, quiet operation**
- **Precisely variable temperature**
- **Variety of reflectors available**
- **Easy fixturing for dual opposing heating**

### Applications

Used for installing dual wall or single wall tubing up to three inches in diameter and for installing SolderSleeve devices. Closed loop version (PID) also available.

### Technical Specification

| | |
|---|---|
| **Electrical Supply** | |
| CV-1981-MK2 | 120 V and 230 V |
| CV-1983 | 120 V and 230 V |
| CV-1981 PID | 120 V and 230 V |
| **Power Consumption** | |
| CV-1981-MK2 | 1600 W |
| CV-1983 | 2260 W/3060 W |
| CV-1981 PID | 1600 W |
| **Total System Noise** | |
| CV-1981-MK2 | 65dB |
| CV-1983 | 65dB |
| CV-1981 PID | >70dB |
| **Length** | |
| CV-1981-MK2 | 340 [13] |
| CV-1983 | 320 [13] |
| CV-1981 PID | 350 [13] |
| **Weight** | |
| CV-1981-MK2 | 1.3 Kg [2.90 lb] |
| CV-1983 | 1.5 Kg [3.30 lb] |
| CV-1981 PID | 1.4 Kg [3.10 lb] |
| **Air Flow** | |
| CV-1981-MK2 | Max 230 l/min |
| CV-1983 | Max 500 l/min |
| CV-1981 PID | 230 l/min |

| **Product Range** |
|---|
| All dual wall, single wall and molded part products. |
| Various devices products. |
| For other products , contact TE. |

| Available in: | Americas | Europe | Asia Pacific |
|---|---|---|---|
| | ■ | ■ | ■ |





Catalog 1654025
Revised 3-13

www.te.com

Dimensions are shown for reference purposes only. Specifications subject to change.

Dimensions are in millimeters unless otherwise specified.

USA: +1 800 522 6752
Asia Pacific: +86 0 400 820 6015
UK: +44 800 267 666

For additional support numbers please visit www.te.com

## CV-1981 and CV-1983 Heavy-Duty Hot-Air Heating Tools (Continued)

### Ordering Information

| Equipment | Description | Part No. | Voltage | Hz |
|---|---|---|---|---|
| CV-1981-MK2 | CV-1981-120V1600W-CANMK2 | A42716-000 | 120V | 50/60 Hz |
| | CV-1981-120V1600W-UKMK2 | E95798-000 | 120V | 50/60 Hz |
| | CV-1981-230V1600WMK2 | 813914-000 | 230V | 50/60 Hz |
| | CV-1981-230V1600W-SEVMK2 | F25836-000 | 230V | 50/60 Hz |
| | CV-1981-230V1600-UKMK2 | 340970-000 | 230V | 50/60 Hz |
| CV-1983 | CV-1983-110V-2260W-UK | 441753-000 | 120V | 50/60 Hz |
| | CV-1983-220V-2260W | 773898-000 | 230V | 50/60 Hz |
| | CV-1983-220V-2260W-UK | 985426-000 | 230V | 50/60 Hz |
| | CV-1983-220V-3060W | 538361-000 | 230V | 50/60 Hz |
| | CV-1983-220V-3060W-UK | 231866-000 | 230V | 50/60 Hz |
| CV-1981-PID | CV-1981-120V-1600W-CANPIDF | 839218-000 | 120V | 50/60 Hz |
| | CV-1981-120V-1600W-UKPID | 928826-000 | 120V | 50/60 Hz |
| | CV-1981-230V-1600WPID | 958770-000 | 230V | 50/60 Hz |
| | CV-1981-230V-1600W-SEVPIDF | 434366-000 | 230V | 50/60 Hz |
| | CV-1981-230V-1600W-UKPIDF | 385828-000 | 230V | 50/60 Hz |
| CV-1983 Barrel Adapter | AD-1962 | 989172-000 | — | — |

### Accessories

| | Application | Part No. |
|---|---|---|
| PR-12 reflector | Tubing: 6.3–25.4 mm [0.25–1 in] | 991973-000 |
| PR-13 reflector | Tubing: Up to 6 mm [0.25 in] | 991963-000 |
| PR-13C reflector | Large SolderSleeve products | 991974-000 |
| PR-21 reflector | Tubing: Up to 25.4 mm [1 in] | 991984-000 |
| PR-24 reflector | Tubing/molded parts: 25.4–34.93 mm [1–1.38 in] | 991964-000 |
| PR-24A reflector | Tubing/molded parts: 34.93–60.33 mm [1.38–2.38 in] | 991989-000 |
| PR-25 reflector | SolderSleeve products: Up to 7 mm [0.28 in] | 991965-000 |
| PR-25D reflector | SolderSleeve products: 6.3–12.7 mm [0.25–0.50 in] | 989523-000 |
| PR-26 reflector | Small SolderSleeve products | 991967-000 |
| PR-33 reflector | SolderSleeve products: 19.05–25.4 mm [0.75–1 in] | 997768-000 |
| AD-1962 adapter for larger-barrel CV-1983 | — | 989172-000 |
| PR-34 reflector | SolderSleeve products: 12.0–20.0 mm [0.47–0.79 in] | 989111-000 |
| PR-51 | Special narrow reflector for molded part transitions (21.5 x 3.5 mm nozzle) [.85 x .14 in] | 113069-000 |

*Note: A42716 supersedes and replaces 538005
340970 supersedes and replaces 923002



Catalog 1654025
Revised 3-13

www.te.com

Dimensions are shown for reference purposes only. Specifications subject to change.

Dimensions are in millimeters unless otherwise specified.

USA: +1 800 522 6752
Asia Pacific: +86 0 400 820 6015
UK: +44 800 267 666

For additional support numbers please visit www.te.com

## HL1910E and HL2010E Steinel® General Purpose Hot-Air Heating Tool

### Products Facts

- **Light weight**
- **Easy, quiet operation**
- **Precise variable temperature**
- **1500 watts**
- **Reflectors and stand (optional)**
- **Wide variety of applications**
- **CE approved (230 V only)**

### Applications

Used for installing heat-shrinkable tubings and molded parts, SolderSleeve devices, and SolderTacts contacts.

### Specifications

| | |
|---|---|
| Steinel® (120 V) power requirement | 120 V, 60 Hz, 12.5 A |
| Steinel® (230 V) power requirement | 230 V, 50 Hz, 8.7 A |
| Rated heater element power | 110V - 2000 W/230V-2000W |
| Weight | 920 g [2.0 lb] |
| Cord length | Approx. 3 m [approx. 8 ft] |
| Typical temperature output* | 49°C to 593°C [120°F to 1100°F] |

*The Steinel® heating tool is equipped with a variable temperature control. The correct temperature setting of the tool will vary, depending on application characteristics. The recommended procedure is to experiment with scrap materials and start with the lowest temperature range.

Steinel is a trademark of Steinel GmbH.

| Available in: | Americas | Europe | Asia Pacific |
|---|---|---|---|
| | ■ | ■ | ■ |





Catalog 1654025
Revised 3-13

www.te.com

Dimensions are shown for reference purposes only. Specifications subject to change.

Dimensions are in millimeters unless otherwise specified.

USA: +1 800 522 6752
Asia Pacific: +86 0 400 820 6015
UK: +44 800 267 666

For additional support numbers please visit www.te.com

## HL1910EE and HL2010E Steinel® General Purpose Hot-Air Heating Tool (Continued)

### Ordering Information

| Model /Description | Part No. |
|---|---|
| HL1910E-KIT-120 | CJ2086-000 |
| HL2010E-KIT-120 | CJ2087-000 |
| HL1910E-230V-EURO | F30529-000 |
| HL1910E-230V-UK | F11734-000 |
| HL1910E-KIT-230V-EURO | A93538-000 |
| HL2010E-230V-EURO | C99451-000 |
| HL2010E-230V-UK | A22932-000 |
| HL2010E-KIT-230V-EURO | A23120-000 |

| Accessories and Replacement Parts | Description | Part No. |
|---|---|---|
| SolderSleeve reflector | HL1802E-074616 | 832011-000 |
| HL1802E-ADAPT for use with PR reflectors*** | HL1802E-ADAPT-PR | 444817-000 |
| Tubing reflector | HL1802E-070519 | 022611-000 |
| Bench stand | HL2010E-BENCH-STD | CJ2085-000 |
| 9-mm-diameter reduction nozzle | HL1802E-070618 | 930321-000 |

**Complete with SolderSleeve reflector.
***Selection of PR reflectors can be found in CV-1981/CV-1983 section.

### Accessories

Clip-on bench stand (P/N CJ2085-000) for heating tool. Must be ordered separately.

SolderSleeve reflector (P/N 832011-000) for SolderSleeve terminators, SolderTacts contacts, and small-diameter tubing. Comes standard with Steinel® heating tool.

Optional tubing reflector (P/N 022611-000) for larger tubing and molded parts. Must be ordered separately.

Steinel is a trademark of Steinel GmbH.

## IR-1891 Shuttle Machine — Twin Workstation Heater for Multiple Installation of Short Length Tubing Products

### Product Facts

- **Automatic cycle start once heater is manually positioned over product, which gives improved process control (recommended for adhesive lined heat-shrinkable tubing e.g. sealing applications)**
- **Automatic heating head retraction at end of cycle prevents damage to components**
- **Multiple product fixture assemblies give increased process rates**
- **Cooling fan above each fixture assembly maintains holding fixture at an acceptable temperature**

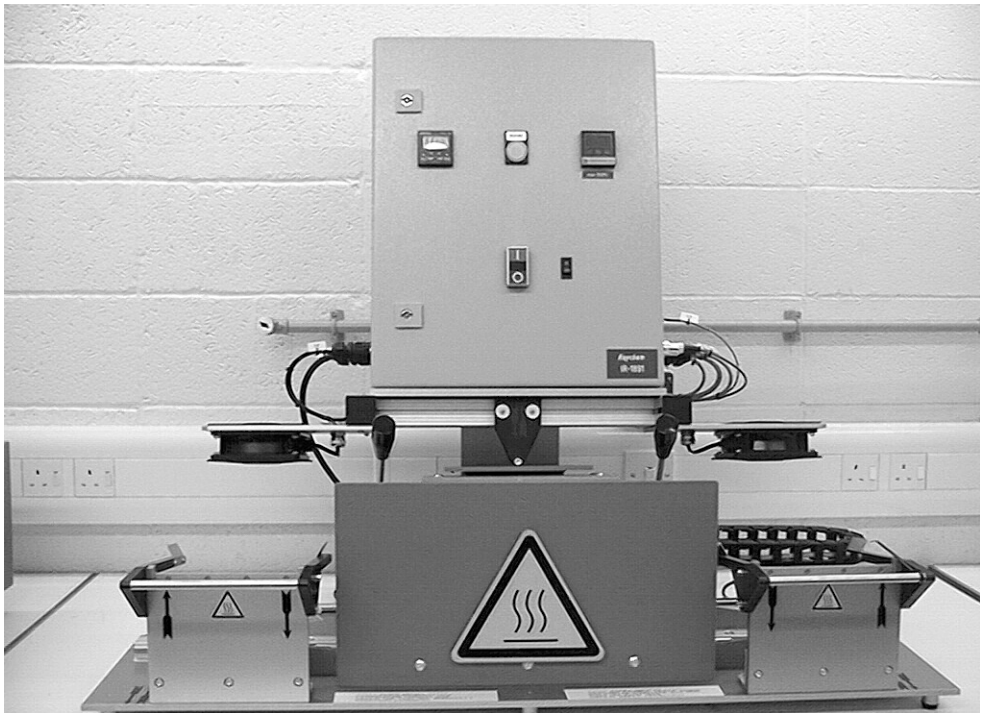

### Applications

The IR-1891 is suitable for the installation of a range of Raychem brand heat-shrinkable tubing products onto a variety of small components, e.g. ring terminals, FASTON terminals and small connectors etc. The machine is provided with two work stations and a moveable heating head.

Each workstation is provided with supports for tooling fixtures (which must be specified and ordered separately). These support the workpieces and locate the tubing products. The operator loads the workpieces into the fixtures at one of the workstations, ensures that the tubing product is correctly positioned and then slides the heat head into position before initiating the heating cycle. The operator then continues with loading/unloading the other work station whilst the heating cycle is taking place.

The IR-1891-220V-Shuttle-Retn is provided with closed loop temperature control and in addition the heat head is 'locked' into position by use of an electromagnet during the heating cycle.

Once the other workstation has been loaded and the first installation is complete, the heat head is moved into position over the product and the next heating cycle initiated. Heating times vary typically from 3 to 30 seconds depending on the size and type of tubing product. Process rates up to 1200 pieces/hour can be achieved depending on the heating time and the time taken by the operator to load unload the workpieces. The installation temperature/power can be varied according to product type/size and required cycle times.

The heating elements, which are continuously energized, are of the infra-red medium wave length type and consist of a coiled resistance wire contained in quartz glass tubes. The closed loop temperature control uses similar elements but having integral thermocouple sensors.

| Available in: | Americas | Europe | Asia Pacific |
|---|---|---|---|
| | | ■ | |





Catalog 1654025
Revised 3-13

www.te.com

Dimensions are shown for reference purposes only. Specifications subject to change.

Dimensions are in millimeters unless otherwise specified.

USA: +1 800 522 6752
Asia Pacific: +86 0 400 820 6015
UK: +44 800 267 666

For additional support numbers please visit www.te.com

## IR-1891 Shuttle Machine — Twin Workstation Heater for Multiple Installation of Short Length Tubing Products (Continued)

### Technical Specification

| | |
|---|---|
| Electrical Supply | 230 V Single Phase |
| Power Consumption | 1600 W |
| Operating Temperature | 650°C max |
| Process Rate | 1200 / hour maximum depending on application and operator |
| Heating Times | 3 to 20 seconds depending on application |
| System Noise | < 70 dB |
| Dimensions – 508636-000 | L1100 x H650 x D500 mm [L43 x H25 x D20 in] |
| Dimensions – 613148-000 / 167309-000 / 289588-000 | L1100 x H900 x D500 mm [L43 x H35 x D20 in] |
| Base Plate Dimensions 289588-000 / 167309-000 | L1040 x D450 mm [L41 x D18 in] |

### Product Range

| |
|---|
| Wide range of TE tubing products in particular LSTT, RNF-3000, RNF-100, HTAT, ATUM. |
| Maximum diameter 20 mm [0.8 in] and maximum length 60 mm [2.0 in] |

### Ordering Information

| Description | Part No. |
|---|---|
| * IR-1891-220VShttle-Retn | 289588-000 |

***Note:** The descriptions given here DO NOT include the supply of the necessary tooling fixtures.These are designed for each individual application.

### Accessories

| | Description | Part No. |
|---|---|---|
| **Grippers:** | | |
| IR-1891-SI-GRP-165-RD-1mm | Red Gripper with 1mm hole | 629602-000 |
| IR-1891-SI-GRP-165-CL-2mm | Clear Gripper with 2mm hole | 112676-000 |
| IR-1891-SI-GRP-165-BK-3mm | Black Gripper with 3mm hole | F83221-000 |
| IR-1891-SI-GRP-165-WT-6mm | White Gripper with 6mm hole | 554196-000 |

**Note:** A wider range of tooling grippers designed for previous applications are available. Please contact TE for details.



Dimensions are shown for reference purposes only. Specifications subject to change.

Dimensions are in millimeters unless otherwise specified.

USA: +1 800 522 6752
Asia Pacific: +86 0 400 820 6015
UK: +44 800 267 666

For additional support numbers please visit www.te.com

## Infrared Heating Tool IR-550 Mark II

### Product Facts

- **Lightweight, portable unit with pedestal base for benchtop operation**
- **Foot switch, so both hands can be free to hold parts**
- **Commercially available tungsten-halogen lamp**
- **Fan-cooled housing**
- **Instant on/off heat**
- **Viewing window that allows parts to be inspected during installation**
- **Quiet, focused IR operation**

### Applications

Used for installing small and large SolderSleeve devices and SolderTacts contacts.

### Specifications

| | |
|---|---|
| Input power | 105–120 V, 50–60 Hz, 4.5 A |
| Normal lamp life | More than 1000 hours of intermittent use |
| Weight | Approximately 2.5 Kg [5.5 lb] |
| Duty cycle | 80%, 90-second max. heating times |

### Ordering Information

| Model | Description | Part No. |
|---|---|---|
| IR-550 heating tool* (120 V) with RG-2 reflector, viewing window, and foot switch | IR-550-50-MARKII-HT-TOOL | 994350-000 |
| 230V Tool CE Approved | IR-550-300-MARKIII-CE | C66438-000 |

### Accessories and Replacement Parts

| | | |
|---|---|---|
| IR-550 foot switch (included with tool assembly 994350) | IR-550-216 | 994375-000 |
| RG-6 reflector for large-diameter SolderSleeve terminations; aperture is 25.4 mm [1.0 in] wide | IR-550-19 | 994590-000 |
| RG-11 reflector; aperture is 12.7 mm [.5 in] wide | IR-550-41 | 993695-000 |
| RG-9 reflector; aperture is 9.525 mm [.375 in] wide | IR-550-39 | 993693-000 |
| RG-2 reflector, included with 994350; aperture is 19.05 mm [.75 in] wide | IR-550-24 | 993770-000 |
| Lamp (120 V) | IR-1000-P-N-13 | 993020-000 |
| Optical filter | IR-550-237 | 118902-000 |
| Viewing window (frame not included) | IR-550-238 | 007510-000 |
| IR-550 upgrade kit: filter, viewing window, inner reflector, outer reflector | IR-550-240-Refurb | 529600-000 |

| Available in: | Americas | Europe | Asia Pacific |
|---|---|---|---|
| | ■ | ■ | ■ |





Catalog 1654025
Revised 3-13

www.te.com

Dimensions are shown for reference purposes only. Specifications subject to change.

Dimensions are in millimeters unless otherwise specified.

USA: +1 800 522 6752
Asia Pacific: +86 0 400 820 6015
UK: +44 800 267 666

For additional support numbers please visit www.te.com

## IR-1759 MiniRay Infrared Heating Tool

### Product Facts

- **Small, lightweight, fan-cooled unit**
- **Small profile for installation where space is restricted**
- **Handheld operation**
- **Focused heat**
- **Quiet, efficient IR operation**
- **CE approved**
- **RoHS compliant**

### Applications

Used for installing SolderSleeve devices and SolderTacts contacts.

* Control box not shown

The MiniRay tool is a hand held Infrared heating tool designed for installing shield terminators, splices and approved IR repair and tubing products.*

The tool is portable, lightweight and is convenient for use where work space is restricted. The hand tool is fan cooled and has low heat emission as the lamp is only energized on demand. A duty cycle up to 50% is permissible with a maximum heating time of 30 seconds.

Two versions of the hand tool are available:

- IR-1759-MK4/A Standard aperture recommended for products up to 6 mm diameter.
- IR-3104-MK4/A Large aperture for products up to 9 mm diameter.

Both versions of the tool will accept larger diameter components but uniform heating is then not assured.

The battery box controller is designed for remote areas, where more portability is required. This battery-powered controller can install approximately 50, 30 second installations before recharging is required. The ED-7-001-MK4-230V-50HZ and ED-7-002-MK4-110V-60HZ Control units provide controls for both power and time and are suitable where the use of pre-set installation conditions is required. Up to 20 memory locations are available for the storage of time/power values. A trigger switch is used to initiate each cycle. The controller can also be used in a manual mode with the operator controlling the duration of the heating cycle via the trigger switch.

The ED-7-CONT-230/110V-MK4 controller is a more simpler unit, with no variable time, or variable power memory functions, and maintains power to the lamp for as long as the trigger switch remains depressed. The tool can be used with either 230V or 110V (nominal) voltage supply.

The product being installed is visible during the heating cycle. An optical filter eliminates the unwanted UV emissions and excess visible light reducing the glare for the operator.

A product kit is available, see page 10-19 for ordering information.

*Contact your local TE representative for details.

[1] Approved by the U.S. Navy for use on fueled aircraft.

| Available in: | Americas[1] | Europe | Asia Pacific |
|---|---|---|---|
| | ■ | ■ | ■ |



Catalog 1654025
Revised 3-13

www.te.com

Dimensions are shown for reference purposes only. Specifications subject to change.

Dimensions are in millimeters unless otherwise specified.

USA: +1 800 522 6752
Asia Pacific: +86 0 400 820 6015
UK: +44 800 267 666

For additional support numbers please visit www.te.com

## IR-1759 MiniRay Infrared Heating Tool (Continued)

### Technical Specifications

| | |
|---|---|
| **IR-1759 / IR-3104 HAND TOOLS** | |
| **Supply Voltage** | 21.5 VAC nominal |
| **Weight** | 1.1 kg |
| **Typical Operating Temperature** | 500˚C |
| **Typical Heating Time** | 15 seconds |
| **Lamp Type, Power & Life - Typical values** | 250 W Tungsten Halogen average life 10,000 cycles @ 50% duty cycle |
| **Noise** | 51 dB (A) |
| **Power Cord Length** | 3.1 m |

**ED-7-CONT-230/110V-MK4 / ED-7-001-MK4-230V-50HZ / ED-7-002-MK4-110V-60HZ and ED-7-BATTBOX-MK4-230/110V**

| | |
|---|---|
| **Supply Voltage:** | |
| ED-7-001 & 002 | 230 VAC 50 Hz & 110 V 50/60 Hz |
| ED-7-CONT-230/110V-MK4 | 230 VAC 50 Hz or 110 V 50/60 Hz |
| ED-7-BATTBOX-MK4-230/110V | 2 x 12V batteries |
| **Input Current:** | |
| ED-7-001 & 002 | 4 A & 10 A |
| ED-7-CON-230/110V-MK4 | 6.3 A |
| Dimensions WxHxL | 160 x 120 x 250 mm |
| **Weight:** | |
| ED-7-001 & 002 | 6.2 kg |
| ED-7-CONT-230/110V-MK4 | 8.0 kg |
| ED-7-BATTBOX-MK4-230/110V | 8.5 kg |
| **Timer Adjustment (ED-7-001/002 only)** | 1-250 seconds |
| **Output Voltage:** | |
| ED-7-001 & 002 | 16-24 VAC (dependent on program) |
| ED-7-CONT-230/110V-MK4 | 21.5 VAC |
| ED-7-BATTBOX-MK4-230/110V | 24V DC nominal |
| **Voltage Output Control Accuracy (with ± 10% input variation):** | |
| ED-7-001 & 002 | ± 3% |
| ED-7-CONT-230/110V-MK4 | ± 0.5V (120V/230V supply) |
| ED-7-BATTBOX-MK4-230/110V | N/A (dependent upon charge) |
| **Lamp "Hold-On" Voltage:** | |
| ED-7-001 & 002 | 3.5 VAC |
| ED-7-CONT-230/110V-MK4 | N/A |
| ED-7-BATTBOX-MK4-230/110V | N/A |
| **Memory Locations (ED-7-001&002 only)** | 20 |

### Product Range

| | |
|---|---|
| **Shield Terminators** | D-10X, SO63, SO96 |
| **For Other TE Products** | Discuss with Product Management |

### Ordering Information

| Description | Kit Part Number |
|---|---|
| IR heater, reflector to fit standard aperture, Standard V-block plus a Non-Timed Control Box 230V or 110V supply | **IR1759-MK4-AT3130-EDCONT** |







Dimensions are shown for reference purposes only. Specifications subject to change.

Dimensions are in millimeters unless otherwise specified.

USA: +1 800 522 6752
Asia Pacific: +86 0 400 820 6015
UK: +44 800 267 666

For additional support numbers please visit www.te.com

## IR-1759 MiniRay Infrared Heating Tool (Continued)

### Parts, Accessories and Spare Parts List

| Description | Part Number | Guideline | Comments |
|---|---|---|---|
| IR1759-Mk4/A /IR1759-Mk3/A | CF0025-000 | Infra Red Heater Standard Aperture | RoHS compliant. Replaces 986899-000 |
| IR1759-Mk4-At3130-EDCont | CF0024-000 | Infra Red Heater, Reflector to fit standard aperture, | RoHS compliant. Replaces 898738-000/IR1759-Mk3-At3130- standard vee block, none timed control EDCont |
| IR3104-Mk4/A | CF5497-000 | Infra Red Heater Large Aperture | RoHS compliant. Replaces 035343-000-000 / IR3104-Mk3/A |
| **ACCESSORIES** | | | |
| AT-3191 | 588701-000 | Reflector to fit Standard Aperture, Special Vee Block | |
| AT-3134 | 988303-000 | Reflector to fit Large Aperture, Standard Vee Block | |
| AE-897 | 966953-000 | Conversion kit from Standard to Large Aperture | |
| AD-7-100 | 176247-000 | External Viewing Window | |
| AT-3147 | 988328-000 | Reflector to fit Large Aperture with Clamps | |
| AT-3132-Mk31/1 | 879865-000 | Reflector to fit Standard Aperture with Clamps and with 5 mm wide mask | Aerospatiale “special” reflector. |
| AT-3131 | 988300-000 | Reflector to fit Standard Aperture | Reflector for IR1759 for SolderTact products with a vee block at one end |
| AT-3132 | 988301-000 | Reflector to fit Standard Aperture with Clamps | Reflector for IR1759 for SolderSleeve products using clamps to hold wire in place |
| AT-3130 | 988299-000 | Reflector to fit Standard Aperture, Standard | Reflector for IR1759 for SolderSleeve products using Vee Block gravity to hold wire in place |
| **SPARE PARTS** | | | |
| AE-226 | 988314-000 | Outer Reflector Mirror for AT-3134/AT-3147 | |
| AE-424 | 547918-000 | Inner Reflector for Standard Aperture | |
| AE-1367 | 338605-000 | Hook | |
| NAE-143-3 | 988208-000 | Bulb 250W/24V | |
| AE-153 | 988285-000 | Inner Reflector for Large Aperture | |
| AD-1360 | 106503-000 | Standard Thermal Shield | |
| AE-205 | 988596-000 | Outer Reflector Mirror for AT-3130/AT3131/AT-3132 | |
| NAE-109-2 | 988382-000 | Lamp Holder | |
| AES-IR1759-100-Filter-Dul | 431468-000 | Filter for Standard Aperture | |
| IR1759/3104-Cable-Asy | 585643-000 | Trigger PCB, Cable Assembly, Includes Lamp Holder and Fan | |
| AE-770 | 747525-000 | Optic Bloc for IR1759 | |
| AE-900 | 277774-000 | Filter Spring IR1759 | |
| NAE-152-1 | 988204-000 | Fan | |
| AT-3130-AE204-AE203-10SET | 481321-000 | Replacement for Vs for AT3130 V Block | AE-203 & AE-204 are two halves of AT-3130 V Block, supplied in quantities of 10 sets |
| AES-IR1759-300-FLTR-LRG | F52511-000 | Filter for Large Aperture Heatgun | |

## IR-1759 MiniRay Infrared Heating Tool (Continued)

### Parts, Accessories and Spare Parts List (continued)

| Description | Part Number | Guideline | Comments |
|---|---|---|---|
| ED-7-CONT-230/110V-Mk4 | CF0026-000 | None Timed Control Box - 230V or 110V Supply | Replaces ED-7-Cont-230/110V 684886-000 |
| ED-7-BATTBOX-MK4-230/110V | CF0200-000 | Battery Powered Controlled for IR-1759 (230V or 110V Supply) - RoHS compliant version | Replaces ED-7-BatteryBox-230/110V/448969-000. Batteries not included. When purchasing the controller, order ED-7-Batt-Battery 755928-000 also. |
| ED-7-001-MK4-230V-50HZA | CF0199-000 | Control Box 230V, with Timer | Replaces Ed-7-001-Mk2-230V-50Hz/869233-000 |
| ED-7-002-MK4-110V-60HZA | CF0201-000 | Control Box 110V, with Timer | Replaces Ed-7-002-Mk2-110V-60Hz/903553-000 |
| **ACCESSORIES** | | | |
| ED-7-Cont-Front-Panel | 619690-000 | Front Panel and Display PCB including Triac and Inductor | |
| ED-7-Cont-Transformer | 139128-000 | Transformer | |
| ED-7-Batt-Battery | 755928-000 | Battery Pack | |
| ED-7-Batt-Front-Panel | 132692-000 | Front Panel and Display PCB with Logic PCB and Power PCB | |
| ED-7-001/2-Transformer | 584781-000 | ED-7-001 & ED-7-002 Transformer | |
| ED-7-001/2-Front-Panel | 524325-000 | ED-7-001 & ED-7-002 Front Panel | |

## Model 16B Belt Heater

### Product Facts

- **Controlled heating for installation of Raychem brand heat-shrinkable tubing at rates required for mass production**
- **Controlled repeatable heating: time and temperature settings can be fixed to maintain repeatable installation parameters**
- **Part positioning that is clearly defined and easy to maintain**
- **Operation that requires only minimal skill**
- **Efficient and economical operation, which greatly reduces labor costs. In most cases the throughput rate is limited only by the rate at which an operator can load parts into the heater**

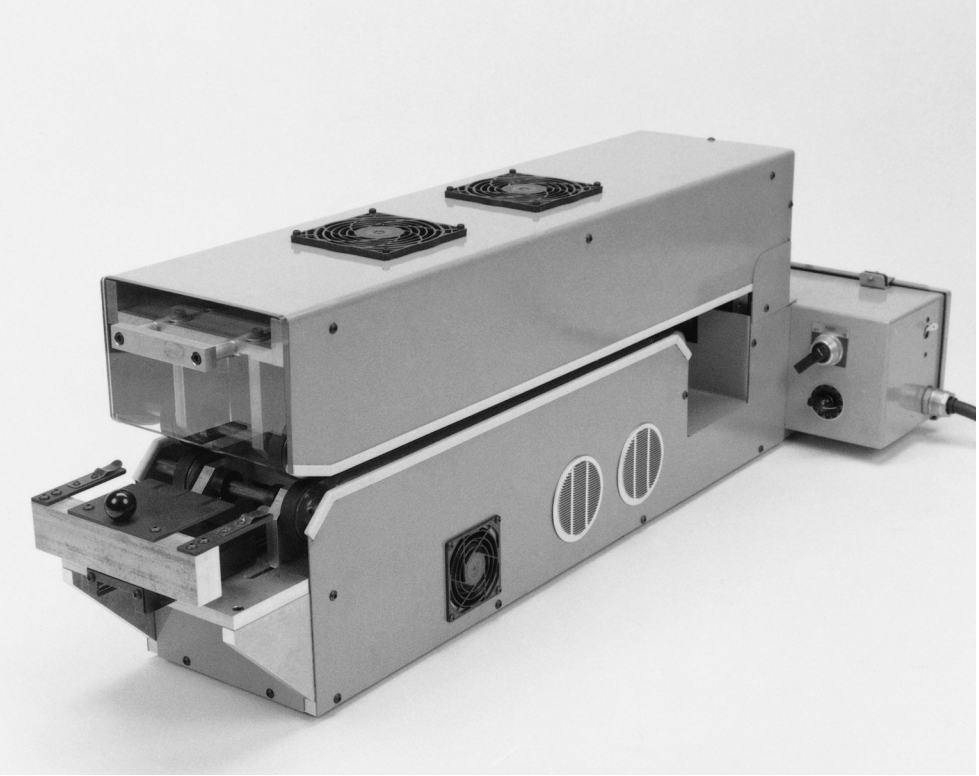

### Applications

Designed for processing a broad range of heat-shrinkable tubing products up to 19 [75] in diameter and 101 [4.0] long. Suitable for either single-wall or adhesive-lined tubing. Heating-element temperature is adjustable up to 600°C [1112°F] and the belt speed is adjustable to 2.28 [7.5] per minute. Operator simply positions the heat-shrink tubing over the assembly and feeds it into the process chamber. Heating and cooling take place automatically with the cables or wires securely fixed.

| Available in: | Americas | Europe | Asia Pacific |
|---|---|---|---|
| | ■ | | ■ |



Catalog 1654025
Revised 3-13

www.te.com

Dimensions are shown for reference purposes only. Specifications subject to change.

Dimensions are in millimeters unless otherwise specified.

USA: +1 800 522 6752
Asia Pacific: +86 0 400 820 6015
UK: +44 800 267 666

For additional support numbers please visit www.te.com

## Model 16B Belt Heater (Continued)

### Specifications and Dimensions

| Electrical | Part No. 827429-000 | Part No. 047143-000 | Part No. 584313-000 |
|---|---|---|---|
| Power requirements | 120 Vac, 1 Ø, 50/60 Hz, 20 A | 220 Vac, 1 Ø, 50/60 Hz, 15 A, 3-wire | 230 Vac, 1 Ø, 50/60 Hz, 15 A, 4-wire |
| Heating elements | 875 W (upper and lower) | 875 W (upper and lower) | 875 W (upper and lower) |

| Mechanical | |
|---|---|
| Conveyor belt system | Two sets of pinch belts right and left, four belts total |
| Machine dimensions | 48 cm [19 in] W x 110 cm [43 in] L x 33 cm [13 in] H |
| Shipping dimensions | 61 cm [24 in] W x 111 cm [44 in] L x 56 cm [42 in] H |
| Machine weight without crate | 55 Kg [120 lb] |
| Shipping weight with crate | 91 Kg [200 lb] |

| Tubing Sizes | |
|---|---|
| Inside diameter before recovery | Up to 19 mm [0.75 in] |
| Length | Up to 101mm [4.0 in] |





Catalog 1654025
Revised 3-13

www.te.com

Dimensions are shown for reference purposes only. Specifications subject to change.

Dimensions are in millimeters unless otherwise specified.

USA: +1 800 522 6752
Asia Pacific: +86 0 400 820 6015
UK: +44 800 267 666

For additional support numbers please visit www.te.com

# Model 19 Conveyor Heater for Processing Raychem Brand Heat-Shrinkable Tubing and Termination Devices

## Product Facts

- **Closed-loop speed and temperature control**
- **CE approved for worldwide use**
- **Adaptable for different applications**
- **Continuous controlled process**

| Available in: | |
|---|---|
| Americas | ■ |
| Europe | ■ |
| Asia Pacific | ■ |

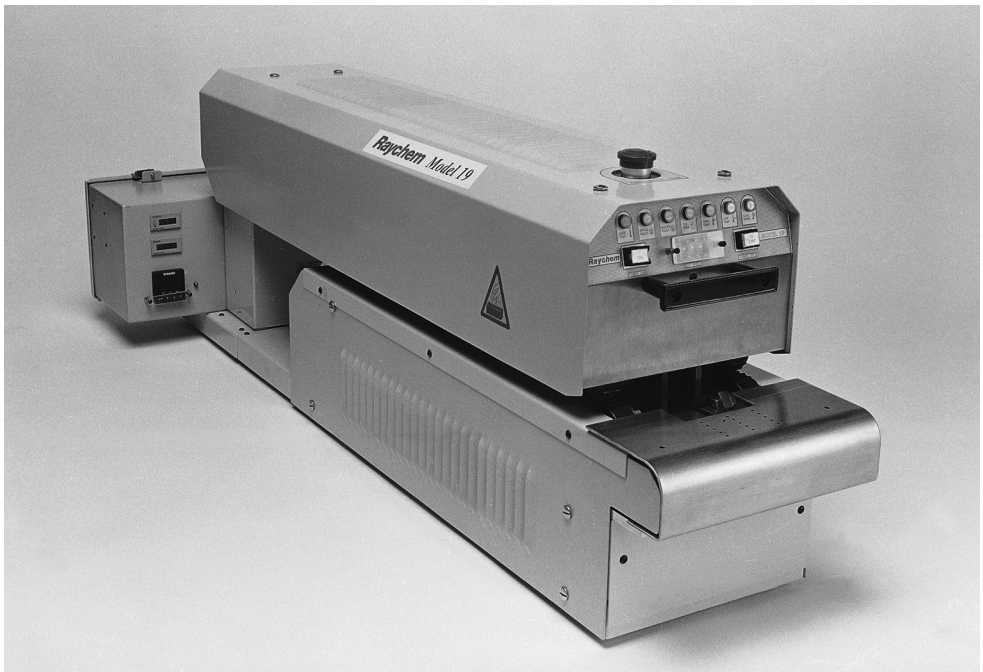


### Applications

The Model 19 conveyor heater is the latest generation of reliable and versatile process heaters for a wide variety of heat-shrinkable products.

Two sets of timing belts grip the individual assemblies and carry them through a closed-loop infrared heating zone, then through a cooling zone, and deposit the completed assemblies in a collection bin.

The processor was designed to meet the requirements of the European Safety Directives and is CE approved, allowing for worldwide use.

The processor is designed to operate on the following line voltages: 210 to 240 Vac, 20 A, 1 Ø, 50/60 Hz.

Options for this processor include:

- Powered or unpowered extension tables to support long or heavy harnesses.
- Kit for processing ring terminals and end terminations.
- Floor stand with wheels.
- Wider heating elements for tubing up to 178 [7.0] long.
- Narrow heating elements for SolderSleeve devices up to 10 [0.4] diameter and 45 [1.8] long or short length tubing less than 50 mm [2.0].

### Product Features
### Controlled Heating Zone

The Model 19 has two etched- foil heating elements mounted under a quartz face. Consistent heating chamber temperatures are obtained with a closed-loop temperature controller. There is a lockout on the controller to prevent unauthorized changes.

### Speed Control

Consistent speed is obtained with a closed-loop speed controller. The speed is adjusted using a 3-digit thumbwheel on the front control panel. There is a lockout on the thumbwheel to prevent unauthorized changes.

### Minimal Skill Requirements

There are clearly marked guides for aligning the assembly as well as the tubing or device being processed. The operator only has to center the assembly; the grippers carry it through the heating and cooling zone and deposit it into the unloading bin.

### Economical Production

The throughput rate is determined by the rate at which an operator can load the processor.

### Self-Diagnostic Circuitry

There are several “self-diagnostic” circuits that alert the operator if any major component fails or if an unsafe processing condition occurs. A light will turn on and a lockout gate will lift in the entry zone, preventing the operator from loading assemblies until the situation has been corrected.

### Other Features Include:

- Emergency stop.
- Automatic cool-down circuit to extend the life of components.
- Lockout on temperature and speed controllers to prevent unauthorized changes.



Catalog 1654025
Revised 3-13

www.te.com

Dimensions are shown for reference purposes only. Specifications subject to change.

Dimensions are in millimeters unless otherwise specified.

USA: +1 800 522 6752
Asia Pacific: +86 0 400 820 6015
UK: +44 800 267 666

For additional support numbers please visit www.te.com

## Model 19 Conveyor Heater for Processing Raychem Brand Heat-Shrinkable Tubing and Termination Devices (Continued)

### Specifications and Dimensions

| Electrical | |
|---|---|
| Power requirements | 210–240 Vac, 20 A, 1 Ø, 50/60 Hz |
| Heating elements | Std = 3160 W/Wide = 3320 W/Narrow = 1760 W |

| Mechanical | |
|---|---|
| Conveyor belt system | Double-sided timing belts, pitch - 9.5 [0.375] |
| Belt speed | Up to 152 cm/min [5.0/min] |
| Processor dimensions | 53 cm [21 in] W, 135 cm [53 in] L, 45 cm [18 in] H |
| Shipping dimensions | 66 cm [26 in] W, 147 cm [58 in] L, 58 cm [23 in] H |
| Shipping weight with crate | 86 Kg [190 lb] |

| Tubing sizes | |
|---|---|
| Tubing diameter (max) | 25 mm [1.0 in] |
| Tubing length (max) | 102 mm [4.0 in]<br>178 mm [7.0 in] wide heating element tool<br>50 mm [2.0 in] narrow heating element tool |
| Work-piece length (min) | 240 mm [9.5 in] |

| Version | Part No. |
|---|---|
| Model 19 Standard | 714529-000 |
| Model 19 Wide | 075131-000 |





Catalog 1654025
Revised 3-13

www.te.com

Dimensions are shown for reference purposes only. Specifications subject to change.

Dimensions are in millimeters unless otherwise specified.

USA: +1 800 522 6752
Asia Pacific: +86 0 400 820 6015
UK: +44 800 267 666

For additional support numbers please visit www.te.com

## Model 81CE Discrete Heater

### Product Facts

- **Closed-loop temperature control for a precise and repeatable thermal process**
- **Oven dwell time precisely set by a 3-digit thumb wheel digital timer**
- **Heat output can be controlled to accommodate a wide variety of applications**
- **Operation requires only minimal skill**
- **Contains numerous safety features**
- **Meets the requirements of CE, OSHA and the NEC**

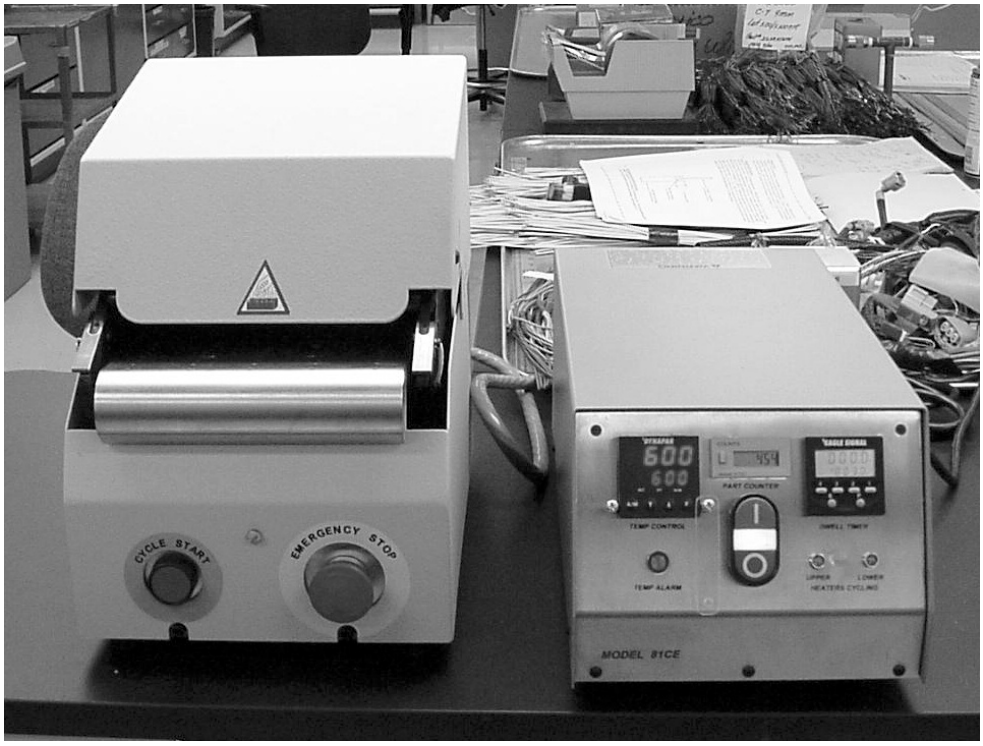


### Applications

The Model 81CE is a discrete heater that can process large, complex assemblies or other suitable substrates using a wide variety of heat-shrinkable tubing products up to 25 mm [1.0] in diameter and 127 mm [5.0] in length. It is suitable for use with both single wall and adhesive-lined tubing. Two jaws grip the assembly or substrate, carry it into an infrared heating chamber for a user-selectable predetermined period of time, then return the completed assembly back to the start position for removal.

| Available in: | Americas | Europe | Asia Pacific |
|---|---|---|---|
| | ■ | ■ | ■ |



Catalog 1654025
Revised 3-13

www.te.com

Dimensions are shown for reference purposes only. Specifications subject to change.

Dimensions are in millimeters unless otherwise specified.

USA: +1 800 522 6752
Asia Pacific: +86 0 400 820 6015
UK: +44 800 267 666

For additional support numbers please visit www.te.com

## Model 81CE Discrete Heater (Continued)

### Specifications and Dimensions

| Electrical | Part No. 071965-000 | Part No. 704393-000 |
|---|---|---|
| Power requirements | 120 VAC, 1Ø, 50/60 Hz, 15 A | 220 VAC, 1Ø, 50/60 Hz, 15 A |
| Heating elements | Two 400 watt infrared stamped foil with infrared heating elements, one top and bottom. | Two 400 watt infrared stamped foil with infrared heating elements, one top and bottom. |
| Timing system | Eagle digital timer, 1 to 999 seconds | Eagle digital timer, 1 to 999 seconds |
| **Pneumatic** | | |
| Requirements for jaw traverse | 30-40 psi clean shop air | 30-40 psi clean shop air |
| **Dimensions** | | |
| Control box dimensions: | | |
| Length | 432 mm [17 in] | 432 mm [17 in] |
| Width | 216 mm [9 in] | 216 mm [9 in] |
| Height | 165 mm [7 in] | 165 mm [7 in] |
| Control box weight | 7.7 Kg [17 lb.] | 7.7 kg [17 lb.] |
| Heating chamber dimensions: | | |
| Length | 380 mm [15 in] | 380 mm [15 in] |
| Width | 240 mm [10 in] | 240 mm [10 in] |
| Height | 343 mm [14 in] | 343 mm [14 in] |
| Heating chamber weight | 18 Kg [40 lb.] | 18 kg [40 lb.] |
| **Shipping Dimensions** | | |
| Length | 610 mm [24 in] | 610 mm [24 in] |
| Width | 610 mm [24 in] | 610 mm [24 in] |
| Height | 530 mm [21 in] | 530 mm [21 in] |
| Shipping weight | 41 Kg [90 lb.] | 41 kg [90 lb.] |
| **Tubing Sizes** | | |
| Inside diameter before heat | Up to 25.4 mm [1 in] | Up to 25.4 mm [1 in] |
| Length | Up to 127 mm [5 in] | Up to 127 mm [5 in] |





Catalog 1654025
Revised 3-13

www.te.com

Dimensions are shown for reference purposes only. Specifications subject to change.

Dimensions are in millimeters unless otherwise specified.

USA: +1 800 522 6752
Asia Pacific: +86 0 400 820 6015
UK: +44 800 267 666

For additional support numbers please visit www.te.com

## Model 105 Tunnel Oven

### Product Facts

- **Closed-loop temperature control for a precise and repeatable thermal process**
- **Conveyor speed precisely set by a 3-digit potentiometer**
- **Operation requires only minimal skill**
- **Contains numerous safety features**
- **Custom length conveyors for longer entry and/or exit sections available**
- **Optional accessories to customize the tunnel oven**

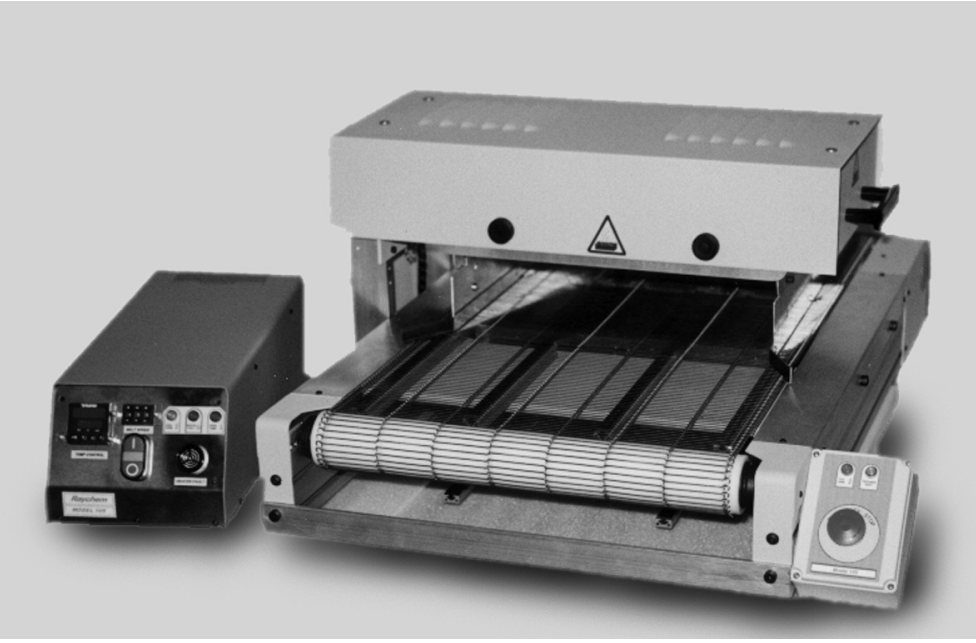

### Applications

Table conveyor heater that provides a controlled process system suitable for installing a wide variety of heat-shrinkable tubing products up to 76 mm [3.0] diameter and unlimited in length. Ideally suited for efficient processing of fiber and fabric HFT and both single wall and dual wall tubing. Designed as an integrated modular unit. Assemblies are placed on the entry section of a mesh belt, transported through a heating chamber, across a bank of cooling fans then discharged from the rear of the conveyor.

| Available in: | Americas | Europe | Asia Pacific |
|---|---|---|---|
| | ■ | ■ | ■ |



Catalog 1654025
Revised 3-13

www.te.com

Dimensions are shown for reference purposes only. Specifications subject to change.

Dimensions are in millimeters unless otherwise specified.

USA: +1 800 522 6752
Asia Pacific: +86 0 400 820 6015
UK: +44 800 267 666

For additional support numbers please visit www.te.com

## Model 105 Tunnel Oven (Continued)

### Specifications and Dimensions

| Electrical | Part number 955018-000 |
|---|---|
| Power requirements | 208/240 VAC, 1Ø, 50/60 Hz, 15 A |
| Heating elements | Two 1500 watt infrared stamped foil with black quartz face, one top and bottom |
| Operating temperature | Ambient to 650°C [1202°F] |
| Drive System | DC motor with SCR drive controller and 3 digit speed potentiometer |
| Conveyor Speed | 0.06 M/min. to 1.5 M/min. [0.20 to 5.0 ft/min] |
| Conveyor Belt | Wire mesh 70% open |
| Heater Oven Gap | 2 Position; 53.6 mm [2.11 in] Lower Position, 98 mm [3.86 in] Upper Position |
| Effective heating width | 356 mm [14 in] |

| Dimensions | |
|---|---|
| Control box dimensions | |
| Length | 515 mm [20 in] |
| Width | 210 mm [8 in] |
| Height | 178 mm [7 in] |
| Control box weight | 7.7 Kg [17 lb] |
| Heating conveyor dimensions | |
| Length | 990 mm [39 in] |
| Width | 685 mm [27 in] |
| Height | 417 mm [17 in] |
| Heating conveyor weight | 68 Kg [150 lb] |

| Shipping Dimensions | |
|---|---|
| Length | 1346 mm [53 in] |
| Width | 1168 mm [46 in] |
| Height | 635 mm [25 in] |
| Shipping weight | 146 Kg [320 lb] |

| Tubing sizes | |
|---|---|
| Inside diameter before heat | Up to 76.2 mm [3 in] |
| Length | |
| Perpendicular to belt travel | 356 mm [14 in] |
| Parallel to belt travel | Unlimited |

### Optional Accessories

- Powered outboard conveyor for processing large assemblies that require only a portion of the assembly to be heated (1 side only).
- Powered entry and exit conveyors for processing long and rigid assemblies requiring entry and exit support of the product.
- Ability to add additional heater chambers to extended custom length wire mesh conveyors.
- Custom floor stands.





Catalog 1654025
Revised 3-13

www.te.com

Dimensions are shown for reference purposes only. Specifications subject to change.

Dimensions are in millimeters unless otherwise specified.

USA: +1 800 522 6752
Asia Pacific: +86 0 400 820 6015
UK: +44 800 267 666

For additional support numbers please visit www.te.com

## RBK-ILS-Processor MkII

### Semi-Automatic Unit for Installation of Splice Sealing Products Adjacent to Ultrasonic Welder

### Product Facts

- **Increased heating element life**
- **Installation times, temperatures and product size information (individual selection)**
- **Sequenced installations**
- **Operator key lock/password protection levels**
- **Automatic heater retraction on mains failure**
- **Automatic calibration (single cycle)**
- **RS232 interface allows time, temperature and product sizes for the next installation to be transferred from a remote machine (e.g. an ultrasonic welding tool)**
- **Machine hours and installation cycle counters**
- **Software upgradeable to support special applications**
- **Air cooling can be provided to an optional stub splice fixture in the RBK-Proc-MK2-Proc-Aircool version**

### Applications

The RBK-ILS-Processor MkII is a semi-automatic unit designed specifically to install splice sealing products onto ultrasonically welded or crimped splice joints used in automotive harnesses.

The operator is able to efficiently load both machines which minimizes ‘dead time’. Installing Raychem brand splice sealing products immediately after welding gives reduced installation time and earliest possible mechanical protection for the welded joint.

The operator positions the splice sealing product centrally over the splice joint and then locates the assembly into the gripper mechanism.

Pushing the two start buttons initiates the machine cycle thus bringing the heating chamber into place over the joint area. The heating chamber remains in place for the set period and then returns to the rest position. In doing so, the wire assembly is automatically ejected, with the splice sealing product installed and the joint area sealed, insulated and strain relieved.

| Available in: | Americas | Europe | Asia Pacific |
|---|---|---|---|
| | ■ | ■ | ■ |



Catalog 1654025
Revised 3-13

www.te.com

Dimensions are shown for reference purposes only. Specifications subject to change.

Dimensions are in millimeters unless otherwise specified.

USA: +1 800 522 6752
Asia Pacific: +86 0 400 820 6015
UK: +44 800 267 666

For additional support numbers please visit www.te.com

## RBK-ILS-Processor MkII (Continued)

### Semi-Automatic Unit for Installation of Splice Sealing Products Adjacent to Ultrasonic Welder
(Continued)

### Technical Specification

| | |
|---|---|
| Electrical Supply | 220V-240V-50Hz |
| Power Consumption | 1.7 Amps (Max) |
| Operating Temperature | 550°C [1022°F] (Max)<br>(500°C [932°F] recommended) |
| Machine Cycle Times for splice sealing products used on typical range of automotive splices | 6 to 20 seconds depending on wire size and the number or wires used |
| Total System Noise | <80dB |
| Dimensions | 390 x 365 x 225 mm [15 x 14 x 9 in.] |
| Weight | 18 Kg [40 lb] |

### Product Range

| | |
|---|---|
| RBK-ILS-125 Products | Sizes 1 to 3A |
| RBK-ILS-85 Products | Sizes 6/1 to 12/3 |
| For Other Products (eg. RBK-VWS, RBK-ESS….) | Contact TE |

### Ordering Information

| | Description | Part No. |
|---|---|---|
| Equipment | RBK-Proc-Mk2-Processor<br>RBK-Proc-MK2-Proc-Aircool | 740331-000<br>A96930-000 |
| Accessories | RBK-ILS-Proc-Stub-Sp-Fix<br>RBK-ILS-Proc-Air-Cool-Kit<br>RBK-ILS-Proc-Termfix-08mm | 981721-000<br>843800-000<br>049857-000 |







Dimensions are shown for reference purposes only. Specifications subject to change.

Dimensions are in millimeters unless otherwise specified.

USA: +1 800 522 6752
Asia Pacific: +86 0 400 820 6015
UK: +44 800 267 666

For additional support numbers please visit www.te.com

## ThermoGun HG Hot-Air Heating Tool

### Product Facts

- **Stand-mounted or handheld, rugged unit for heavy-duty use**
- **Built-in stand and turbo-fan-driven blower**
- **Adjustable side vents**
- **Adjustable temperature**
- **1680 to 2160 watts**
- **Large reflector size**
- **High heat output for fast installation**

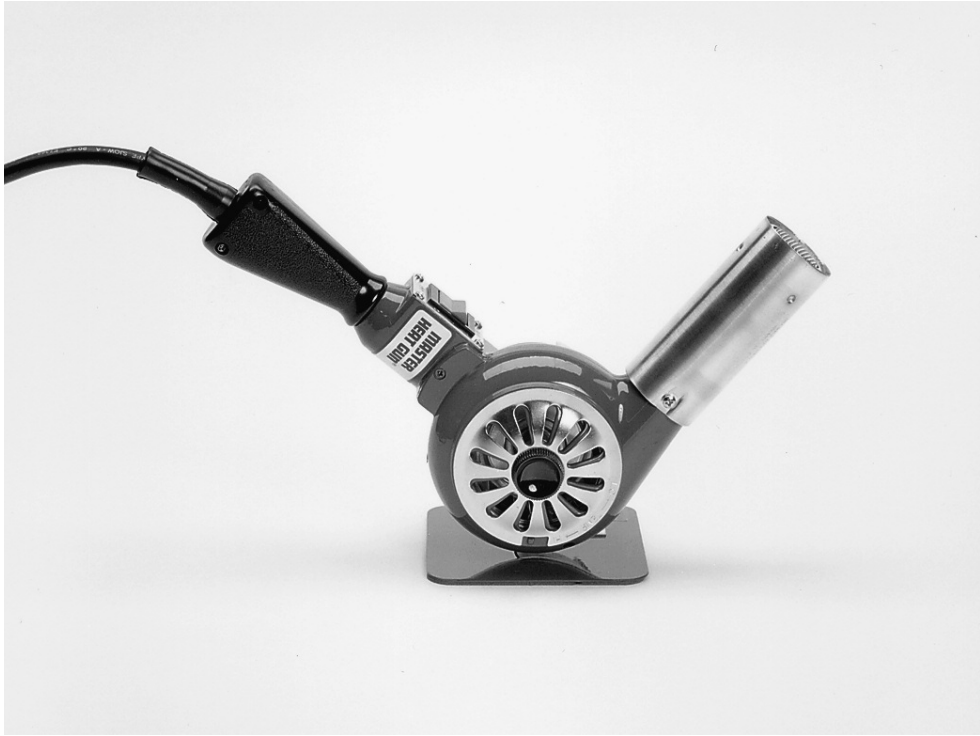


### Applications

Used for installing molded parts onto adapters or harnesses and installing a broad range of heat-shrinkable products, including boots and tubing up to three inches in diameter..

### Specifications

| Model | Power Requirements | Input Watts | Temperature Range | CFM* | RPM** |
|---|---|---|---|---|---|
| HG-501A | 120 V, 60 Hz, 14 A | 1680 | 260°C–399°C [500°F–750°F] | 23 | 1700 |
| HG-502A | 230 V, 50/60 Hz, 7 A | 1680 | 260°C–399°C [500°F–750°F] | 23 | 1700 |
| HG-751A-C | 120 V, 60 Hz, 18 A | 2160 | 399°C–538°C [750°F–1000°F] | 23 | 1700 |
| HG-752A | 230 V, 50/60 Hz, 9 A | 1740 | 399°C–538°C [750°F–1000°F] | 23 | 1700 |

*CFM = Cubic feet per minute.
**RPM = Revolutions per minute.

| Available in: | Americas | Europe | Asia Pacific |
|---|---|---|---|
| | ■ | | ■ |



Catalog 1654025
Revised 3-13

www.te.com

Dimensions are shown for reference purposes only. Specifications subject to change.

Dimensions are in millimeters unless otherwise specified.

USA: +1 800 522 6752
Asia Pacific: +86 0 400 820 6015
UK: +44 800 267 666

For additional support numbers please visit www.te.com

## ThermoGun HG Hot-Air Heating Tool (Continued)

### Accessories

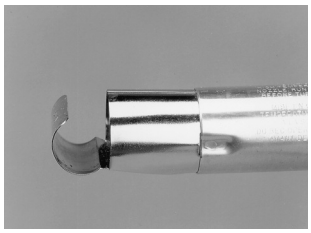

**A-160-HG reflector (P/N 991017)** for short lengths of tubing up to 19.05 [75] in diameter. Must be ordered separately.

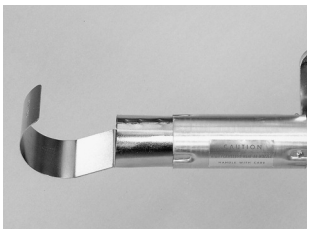

**A-170-HG reflector (P/N 991018)** for short lengths of tubing 19.05–50.8 [.75–2] in diameter. Must be ordered separately.

**TG-23 reflector (P/N 991026)** for boots up to 44.45 [1.75] in diameter. Must be ordered separately.

### Ordering Information

| Model* | Housing Color | Part No. |
|---|---|---|
| HG-501A | Red | 462047-000 |
| HG-502A | Red | 389363-000 |
| HG-751A-C | Red | 926935-000 |
| HG-752A | Red | 026239-000 |

| Accessories | Tubing Application | Part No. |
|---|---|---|
| A-160-HG standard reflector | Diameters up to 19.05 mm [0.75 in] | 991017-000 |
| A-170-HG large tubing reflector | Diameters of 19.05–50.8 mm [0.75–2 in] | 991018-000 |
| TG-23 small boot reflector | Diameters up to 44.5 mm [1.75 in] | 991026-000 |
| TG-24 large boot reflector | — | 991027-000 |

*Complete with bench stand.





Catalog 1654025
Revised 3-13

www.te.com

Dimensions are shown for reference purposes only. Specifications subject to change.

Dimensions are in millimeters unless otherwise specified.

USA: +1 800 522 6752
Asia Pacific: +86 0 400 820 6015
UK: +44 800 267 666

For additional support numbers please visit www.te.com

## Engineering Notes



Catalog 1654025
Revised 3-13

www.te.com

Dimensions are shown for reference purposes only. Specifications subject to change.

Dimensions are in millimeters unless otherwise specified.

USA: +1 800 522 6752
Asia Pacific: +86 0 400 820 6015
UK: +44 800 267 666

For additional support numbers please visit www.te.com

## Table of Contents

**Equivalents and Conversions** ..... 11-2, 11-3
**Temperature Conversion Formula** ..... 11-3, 11-4
**Glossary** ..... 11-5 to 11-13
**Part/Product Index** ..... 11-14 to 11-26





Catalog 1654025
Revised 3-13

www.te.com

Dimensions are shown for reference purposes only. Specifications subject to change.

Dimensions are in millimeters unless otherwise specified.

USA: +1 800 522 6752
Asia Pacific: +86 0 400 820 6015
UK: +44 800 267 666

For additional support numbers please visit www.te.com

## Equivalents and Conversions

### Decimal Equivalents

| Fraction of Inch | Decimal of Inch | Decimal Millimeters | Fraction of Inch | Decimal of Inch | Decimal Millimeters |
|---|---|---|---|---|---|
| 1/64 | .0156 | 0.3969 | | .5118 | 13.0000 |
| 1/32 | .0313 | 0.7938 | 33/64 | .5156 | 13.0969 |
| | .0394 | 1.0000 | 17/32 | .5313 | 13.4938 |
| 3/64 | .0469 | 1.1906 | 35/64 | .5469 | 13.8906 |
| 1/16 | .0625 | 1.5875 | | .5512 | 14.0000 |
| 5/64 | .0781 | 1.9844 | 9/16 | .5625 | 14.2875 |
| | .0787 | 2.0000 | 37/64 | .5781 | 14.6844 |
| 3/32 | .0938 | 2.3813 | | .5906 | 15.0000 |
| 7/64 | .1094 | 2.7781 | 19/32 | .5938 | 15.0813 |
| | .1181 | 3.0000 | 39/64 | .6094 | 15.4781 |
| 1/8 | .1250 | 3.1750 | 5/8 | .6250 | 15.8750 |
| 9/64 | .1406 | 3.5719 | | .6299 | 16.0000 |
| 5/32 | .1563 | 3.9688 | 41/64 | .6406 | 16.2719 |
| | .1575 | 4.0000 | 21/32 | .6563 | 16.6688 |
| 11/64 | .1719 | 4.3656 | | .6693 | 17.0000 |
| 3/16 | .1875 | 4.7625 | 43/64 | .6719 | 17.0656 |
| | .1969 | 5.0000 | 11/16 | .6875 | 17.4625 |
| 13/64 | .2031 | 5.1594 | 45/64 | .7031 | 17.8594 |
| 7/32 | .2188 | 5.5563 | | .7087 | 18.0000 |
| 15/64 | .2344 | 5.9531 | 23/32 | .7188 | 18.2563 |
| | .2362 | 6.0000 | 47/64 | .7344 | 18.6531 |
| 1/4 | .2500 | 6.3500 | | .7480 | 19.0000 |
| 17/64 | .2656 | 6.7469 | 3/4 | .7500 | 19.0500 |
| | .2756 | 7.0000 | 49/64 | .7656 | 19.4469 |
| 9/32 | .2813 | 7.1438 | 25/32 | .7813 | 19.8438 |
| 19/64 | .2969 | 7.5406 | | .7874 | 20.0000 |
| 5/16 | .3125 | 7.9375 | 51/64 | .7969 | 20.2406 |
| | .3150 | 8.0000 | 13/16 | .8125 | 20.6375 |
| 21/64 | .3281 | 8.3344 | | .8268 | 21.0000 |
| 11/32 | .3438 | 8.7313 | 53/64 | .8281 | 21.0344 |
| | .3543 | 9.0000 | 27/32 | .8438 | 21.4313 |
| 23/64 | .3594 | 9.1281 | 55/64 | .8594 | 21.8281 |
| 3/8 | .3750 | 9.5250 | | .8661 | 22.0000 |
| 25/64 | .3906 | 9.9219 | 7/8 | .8750 | 22.2250 |
| | .3937 | 10.0000 | 57/64 | .8906 | 22.6219 |
| 13/32 | .4063 | 10.3188 | | .9055 | 23.0000 |
| 27/64 | .4219 | 10.7156 | 29.32 | .9063 | 23.0188 |
| | .4331 | 11.0000 | 59/64 | .9219 | 23.4156 |
| 7/16 | .4375 | 11.1125 | 15/16 | .9375 | 23.8125 |
| 29/64 | .4531 | 11.5094 | | .9449 | 24.0000 |
| 15/32 | .4688 | 11.9063 | 61/64 | .9531 | 24.2094 |
| | .4724 | 12.0000 | 31/32 | .9688 | 24.6063 |
| 31/64 | .4844 | 12.3031 | | .9843 | 25.0000 |
| 1/2 | .5000 | 12.7000 | 63/64 | .9844 | 25.0031 |
| | | | 1 | 1.0000 | 25.4000 |

### Prefixes (SI), Values, and Symbols

| Prefix | Value | Symbol | Prefix | Value | Symbol |
|---|---|---|---|---|---|
| Tera | 1012 | T | Deci | 10-1 | d |
| Giga | 109 | G | Centi | 10-2 | c |
| Mega | 106 | M | Milli | 10-3 | m |
| Kilo | 103 | k | Micro | 10-6 | µ |
| Hecto | 102 | h | Nano | 10-9 | n |
| Deca | 101 | da | Pico | 10-12 | p |



Catalog 1654025
Revised 3-13

www.te.com

Dimensions are shown for reference purposes only. Specifications subject to change.

Dimensions are in millimeters unless otherwise specified.

USA: +1 800 522 6752
Asia Pacific: +86 0 400 820 6015
UK: +44 800 267 666

For additional support numbers please visit www.te.com

## Equivalents and Conversions (Continued)

### Conversion Factors

| Length | Area | Volume | Mass |
|---|---|---|---|
| Inches x 25.40 = Millimeters | Sq. inches x 6.452 = Sq. centimeters | Cu. inches x 16.39 = Cu. centimeters | Ounces x 28.35 = Grams |
| Millimeters x 0.03937 = Inches | Sq. centimeters x 0.1550 = Sq. inches | Cu. cm. x 0.06102 = Cu. inches | Grams x 0.03527 = Ounces |
| Feet x 0.3048 = Meters | Sq. feet x 0.0929 = Sq. meters | Cu. feet x 0.02832 = Cu. meters | Pounds x 0.4536 = Kilograms |
| Meters x 3.281 = Feet | Sq. meters x 10.76 = Sq. feet | Cu. meters x 35.31 = Cu. feet | Kilograms x 2.205 = Pounds |
| Miles x 1.609 = Kilometers | Sq. miles x 2.59 = Sq. kilometers | | Kilograms/km x 0.6214 = Pounds/kft |
| Kilometers x 0.6214 = Miles | Sq. kilometers x 0.3861 = Sq. miles | | Pounds/kft x 1.4881 = Kilograms/km |
| Ohms/km x 0.3048 = Ohms/kft | Circular mils x 0.7854 = Sq. mil | | |

## Temperature Conversion Formula

**°C = (°F -32) ÷ 1.8**
**°F = (°C x 1.8) + 32**

| °F | °C | °F | °C | °F | °C | °F | °C |
|---|---|---|---|---|---|---|---|
| -103 | -75.00 | -30 | -34.44 | 25 | -3.89 | 65 | 18.33 |
| -101.2 | -74.00 | -28 | -33.33 | 26 | -3.33 | 66 | 18.89 |
| -99.4 | -73.00 | -26 | -32.22 | 27 | -2.78 | 67 | 19.44 |
| -97.6 | -72.00 | -24 | -31.11 | 28 | -2.22 | 68 | 20.00 |
| -95.8 | -71.00 | -22 | -30.00 | 29 | -1.67 | 69 | 20.56 |
| -94.0 | -70.00 | -20 | -28.89 | 30 | -1.11 | 70 | 21.11 |
| -92.2 | -69.00 | -18 | -27.78 | 31 | -0.56 | 71 | 21.67 |
| -90.4 | -68.00 | -16 | -26.67 | 32 | 0.00 | 72 | 22.22 |
| -88.6 | -67.00 | -14 | 25.56 | 33 | 0.56 | 73 | 22.78 |
| -86.8 | -66.00 | -12 | -24.44 | 34 | 1.11 | 74 | 23.33 |
| -85.0 | -65.00 | -10 | -23.33 | 35 | 1.67 | 75 | 23.89 |
| -83.2 | -64.00 | -8 | -22.22 | 36 | 2.22 | 77 | 25.00 |
| -81.4 | -63.00 | -6 | -21.11 | 37 | 2.78 | 77 | 25.00 |
| -79.6 | -62.00 | -4 | -20.00 | 38 | 3.33 | 78 | 25.56 |
| -77.8 | -61.00 | -2 | -18.89 | 39 | 3.89 | 79 | 26.11 |
| -76.0 | -60.00 | 0 | -17.78 | 40 | 4.44 | 80 | 26.67 |
| -74.2 | -59.00 | 1 | -17.22 | 41 | 5.00 | 81 | 27.72 |
| -72.4 | -58.00 | 2 | -16.67 | 42 | 5.56 | 82 | 27.78 |
| -70.6 | -57.00 | 3 | -16.11 | 43 | 6.11 | 83 | 28.33 |
| -68.8 | -56.00 | 4 | -15.56 | 44 | 6.67 | 84 | 28.89 |
| -67.0 | -55.00 | 5 | -15.00 | 45 | 7.22 | 85 | 29.44 |
| -65.2 | -54.00 | 6 | -14.44 | 46 | 7.78 | 86 | 30.00 |
| -63.4 | -53.00 | 7 | -13.89 | 47 | 8.33 | 87 | 30.56 |
| -61.6 | -52.00 | 8 | -13.33 | 48 | 8.89 | 88 | 31.11 |
| -59.8 | -51.00 | 9 | -12.78 | 49 | 9.44 | 89 | 31.67 |
| -58.0 | -50.00 | 10 | -12.22 | 50 | 10.00 | 90 | 32.22 |
| -56.2 | -49.00 | 11 | -11.67 | 51 | 10.56 | 91 | 32.78 |
| -54.4 | -48.00 | 12 | -11.11 | 52 | 11.11 | 92 | 33.33 |
| -52.6 | -47.00 | 13 | -10.56 | 53 | 11.67 | 93 | 33.89 |
| -50.8 | -46.00 | 14 | -10.00 | 54 | 12.22 | 94 | 34.44 |
| -49.0 | -45.00 | 15 | -0.44 | 55 | 12.78 | 95 | 35.00 |
| -47.2 | -44.00 | 16 | -8.89 | 56 | 13.33 | 96 | 35.56 |
| -45.4 | -43.00 | 17 | -8.33 | 57 | 13.89 | 97 | 36.11 |
| -43.6 | -42.00 | 18 | -7.78 | 58 | 14.44 | 98 | 36.67 |
| -41.8 | -41.00 | 19 | -7.22 | 59 | 15.00 | 99 | 37.22 |
| -40 | -40.00 | 22 | -6.11 | 60 | 15.56 | 100 | 37.78 |
| -38 | -38.89 | 21 | -6.11 | 61 | 16.11 | 101 | 38.33 |
| -36 | -37.78 | 22 | -5.56 | 62 | 16.67 | 102 | 38.88 |
| -34 | -36.67 | 23 | -5.00 | 63 | 17.22 | 103 | 39.44 |
| -32 | -35.56 | 24 | -4.44 | 64 | 17.78 | 104 | 40.00 |



Catalog 1654025
Revised 3-13

www.te.com

Dimensions are shown for reference purposes only. Specifications subject to change.

Dimensions are in millimeters unless otherwise specified.

USA: +1 800 522 6752
Asia Pacific: +86 0 400 820 6015
UK: +44 800 267 666

For additional support numbers please visit www.te.com

## Temperature Conversion Formula (Continued)

**°C = (°F -32) ÷ 1.8**
**°F = (°C x 1.8) + 32**
(Continued)

| °F | °C | °F | °C | °F | °C | °F | °C |
|---|---|---|---|---|---|---|---|
| 105 | 40.55 | 145 | 62.78 | 185 | 85.00 | 325 | 162.78 |
| 106 | 41.11 | 146 | 63.33 | 186 | 85.55 | 330 | 165.56 |
| 107 | 41.66 | 147 | 63.88 | 187 | 86.11 | 335 | 168.33 |
| 108 | 42.22 | 148 | 64.44 | 189 | 87.22 | 340 | 171.11 |
| 109 | 42.77 | 149 | 65.00 | 189 | 87.22 | 345 | 173.89 |
| 110 | 43.33 | 150 | 65.56 | 190 | 87.78 | 350 | 176.67 |
| 111 | 43.88 | 151 | 66.11 | 191 | 88.33 | 355 | 179.44 |
| 112 | 44.44 | 152 | 66.66 | 192 | 88.88 | 360 | 182.22 |
| 113 | 45.00 | 153 | 67.22 | 193 | 89.44 | 365 | 185.00 |
| 114 | 45.55 | 154 | 67.77 | 194 | 90.00 | 370 | 187.78 |
| 115 | 46.11 | 155 | 68.33 | 195 | 90.55 | 375 | 190.55 |
| 116 | 46.66 | 156 | 68.88 | 196 | 91.11 | 380 | 193.33 |
| 117 | 47.22 | 157 | 69.44 | 197 | 91.66 | 385 | 196.11 |
| 118 | 47.77 | 158 | 70.00 | 198 | 92.22 | 390 | 198.89 |
| 119 | 48.33 | 159 | 70.55 | 199 | 92.77 | 395 | 201.67 |
| 120 | 48.89 | 160 | 71.11 | 200 | 93.33 | 400 | 204.44 |
| 121 | 49.44 | 161 | 71.66 | 205 | 96.11 | 405 | 207.22 |
| 122 | 50.00 | 162 | 72.22 | 210 | 98.89 | 410 | 210.00 |
| 123 | 50.55 | 163 | 72.77 | 215 | 101.67 | 415 | 212.78 |
| 124 | 51.11 | 164 | 73.33 | 220 | 104.44 | 425 | 215.56 |
| 125 | 51.67 | 165 | 73.89 | 225 | 107.22 | 425 | 218.33 |
| 126 | 52.22 | 166 | 74.44 | 230 | 110.00 | 430 | 221.11 |
| 127 | 52.77 | 167 | 75.00 | 235 | 112.78 | 435 | 223.89 |
| 128 | 53.33 | 168 | 75.55 | 240 | 115.56 | 440 | 226.67 |
| 129 | 53.88 | 169 | 76.11 | 245 | 118.33 | 445 | 229.44 |
| 130 | 54.44 | 170 | 76.67 | 250 | 121.11 | 450 | 232.22 |
| 131 | 55.00 | 171 | 77.22 | 255 | 123.89 | 455 | 235.00 |
| 133 | 56.11 | 172 | 77.77 | 260 | 126.67 | 460 | 237.78 |
| 133 | 56.11 | 173 | 78.33 | 265 | 129.44 | 465 | 240.55 |
| 134 | 56.66 | 174 | 78.88 | 270 | 132.22 | 470 | 243.33 |
| 135 | 57.22 | 175 | 79.44 | 275 | 135.00 | 475 | 246.11 |
| 136 | 57.77 | 176 | 80.00 | 280 | 137.78 | 480 | 248.89 |
| 137 | 58.33 | 177 | 80.55 | 285 | 140.55 | 485 | 251.67 |
| 138 | 58.88 | 178 | 81.11 | 290 | 143.33 | 490 | 254.44 |
| 139 | 59.44 | 179 | 88.66 | 295 | 146.11 | 495 | 257.22 |
| 140 | 60.00 | 180 | 82.22 | 300 | 148.89 | | |
| 141 | 60.55 | 181 | 82.77 | 305 | 151.67 | | |
| 142 | 61.11 | 182 | 83.33 | 310 | 154.44 | | |
| 143 | 61.66 | 183 | 83.88 | 315 | 157.22 | | |
| 144 | 62.22 | 184 | 84.44 | 320 | 160.00 | | |

## Glossary



**Abrasion-resistance**
A measure of the ability of a wire or wire covering to resist damage by mechanical means.

**Accelerated Aging**
A test in which voltage, temperature, or other test parameters are increased above normal operating values to obtain observable deterioration in a relatively short time. The plotted results give service life within the context of the test.

**Adapter**
A device usually attached to the rear of connectors that provides for the attachment of harnessing components, such as strain-relief clamps, heat-shrinkable boots, and braid.

**Adhesive Liner**
Lining that melts and flows inside a sleeve or molded part, filling any voids in between the substrate and the sleeve or molded part. DuraSeal has an adhesive liner.

**Adhesive (Hot Melt)**
Dual-wall tubing and precoated molded parts whose inner layer melts and flows when heated, fills voids in the areas being covered, and forms a mechanical bond to the substrate. Unlike an encapsulant, an adhesive forms a mechanical bond to the substrate.

**Aging**
Change in the properties of a material over time and under specific conditions. Generally refers to environmental stimulus such as heat and light.

**Altitude Immersion Seal**
A seal able to withstand substantial pressure change (for example, from sea level to 75,000 feet).

**Amnesia**
The tendency over time for a heat-shrinkable elastomeric tubing or molded part to fail to recover completely to its specified recovered size.
See Shelf Life.

**Ampacity**
See Current-carrying Capacity.

**ASTM**
**(American Society for Testing and Materials)**
A nonprofit industry wide organization that formulates test methods and material specifications, and publishes standards, testing methods, recommended practices, definitions, and other materials.

**Attenuation**
Power loss resulting in weaker signals in an electrical system as the signals travel along wires. In cables, generally expressed in dB per unit length, usually 100 feet.

**AWG**
**(American Wire Gauge)**
The recognized method (in the United States) of specifying conductor size. The higher the gauge number, the smaller the conductor size.

**Back-mounted**
A termination assembly mounted from the inside of a panel or box with its mounting flange inside the equipment.

**Band Marking**
A continuous circumferential band applied to a wire at regular intervals for identification.

**Bare Conductor**
A conductor not covered with insulating material.

**Barrel**
1.) Connector barrel: The section of the terminal, splice, or contact that accommodates the stripped conductor.
2.) Insulation barrel: The section of the terminal, splice, or contact that accommodates the conductor insulation.
3.) Open barrel: The section of a cap that accommodates the conductor.

**Batch Number**
See Lot Number.

**Bayonet Coupling**
A quick-coupling device for plug and receptacle connectors. Mating is accomplished by rotation of the two parts under pressure.

**Beaming**
Crosslinking by means of high-energy electrons.

**Binder**
A spiral wrapping of a thread to hold together the members of a cable.

**Blocking**
The sticking together of insulated wires; usually caused by heat.

**Body**
A protective covering of resilient material over any portion of a cable, wire termination, or termination assembly in addition to normal jacketing of insulation, to prevent entry of moisture. Also, a form for holding potting compound.

**Bonding Temperature**
Temperature above which adhesive melts and flows sufficiently to form an adhesive bond between substrates.

**Braid**
A woven metallic or fiber layer applied over wire or cable to act as a protective barrier or shielding.

**Braid Angle**
The angle between the braid strands and the axis of the cable.

**Breakdown Voltage**
The voltage at which an insulator or dielectric fails to maintain the applied voltage.

**Breakout**
A region in a harness assembly where a wire or a group of wires is detached to form a separate, terminated branch. Also known as a transition.

**Brittle Temperature**
The temperature below which a material becomes brittle, often measured by a cold impact test.

**Bunch Stranding**
A method of twisting individual strands to form a finished stranded conductor. Specifically, a number of strands twisted together in a common direction and with a uniform pitch (or twist) per inch.

**Bus**
A communal circuit over which data or power is transmitted.

**Cable**
Two or more wires in a twisted or parallel configuration. Also, a shielded wire.

**Cable Clamp**
A mechanical clamp attached to the cable side of a termination assembly to support the cable or wire bundle. It provides strain relief and absorbs vibration and shock that would otherwise be transmitted by the cable terminations.

**Cable Clamp Adapter**
A mechanical adapter that attaches to the rear of a termination assembly to allow the attachment of a cable clamp.

**Cable Sealing Clamp**
A device consisting of a gland nut designed to seal around the jacket of a cable.

**Cabler**
A machine that mechanically assembles a group of insulated wires.



Catalog 1654025
Revised 3-13
www.te.com

Dimensions are shown for reference purposes only. Specifications subject to change.
Dimensions are in millimeters unless otherwise specified.
USA: +1 800 522 6752
Asia Pacific: +86 0 400 820 6015
UK: +44 800 267 666
For additional support numbers please visit www.te.com

## Glossary (Continued)

**Cabling**
The act of twisting together two or more insulated components to form a cable.

**Capacitance**
The ability of an insulation to store electrical energy. This is a function of the permitivity (dielectric constant) of the insulation. Usually expressed in pico farads/foot for a cable.

**Carrier**
A group of strands or ends used to form a finished braid.

**Characteristic Impedance**
The impedance of a transmission line that is independent of length. Also, the ratio of voltage to current at any point along a transmission line on which there are no standing waves.

**Chemical Resistance**
The ability of an insulation to withstand the presence of materials—such as acids, bases, water, salt water, and fuels—that can deteriorate the insulation, or that, if penetrable to the conductor, can cause dielectric loss of insulating qualities.

**Cheminax Cables**
Rgistered trade name for coaxial cables.

**Circuit**
The interconnection of a number of electrical elements or parts to accomplish a desired function.

**Clocking**
The arrangement of connector inserts, jackscrews, polarizing pins, sockets, keys/keyways, or housing configurations to prevent the mismating or cross-mating of connectors. See also Polarization.

**CMA (Circular Mil Area)**
The unit for expressing the cross-sectional area of a conductor. Equal to the diameter of a conductor strand (expressed in mils) squared, times the number of strands.

**Coax**
See Coaxial Cable.

**Coaxial Cable**
A cable composed of two insulated conductors—such as a conductor and a shield—whose center axis is the same. Usually this term applies only to cable used in electronic signal circuits.

**Cold Bend**
A test conducted by wrapping tubing or cable around a mandrel or by bending it in an arc while at a low temperature.

**Cold Flow**
Permanent deformation of polymeric materials (insulation) at ambient temperature due to mechanical force or pressure (not due to heat softening).

**Cold Impact**
A test performed by subjecting a component to a specified impact during exposure to low temperature. It measures the brittleness of the material.

**Cold Joint**
A soldered joint made with insufficient heat. (Solder hasn't completely flowed and wet the substrate.)

**Color Code**
A means of identifying cable components using solid colors or stripes. Also, the scheme that assigns a number from 0 to 9 for each of 10 colors.

**Color Stability**
The time and temperature ranges within which the color of a material will remain within the specified color limit.

**Component**
A wire or cable that is combined with other wires or cables to make a multicomponent cable.

**Compound**
An insulating or jacketing material made by formulating polymeric materials and additives.

**Compound Under Strands (CUS)**
A problem that occurs when loose stranding, or overheating during extrusion, allows compounds to get under individual strands of conductor.

**Concentric Stranding**
A method of stranding conductor. Specifically, the final conductor is built up in layers so that the inner diameter of a succeeding layer is always equal to the outer diameter of the underlying layer.

**Concentricity**
Ratio (expressed as a percentage) of the thinnest to the heaviest wall thickness. Measured on expanded or recovered tubing, or wire insulation, or jacketing.

**Conductivity**
The capability of a material to carry electrical current, usually expressed as a percentage of copper conductivity (copper being 100%). Specifically, the ratio of the current flow to the potential difference causing the flow. The reciprocal of resistance.

**Conductor**
The metallic strand or strands used to carry an electric current.

**Conductor Resistance**
The resistance to flow of the electrical current along a conductor. Expressed in ohms/1000 feet. (Usually referenced to 20°C [68°F]).

**Conduit**
A tubular raceway for holding wires or cables.

**Configuration**
Arrangement of contacts in a multiple-contact connector.

**Connector**
A device used to physically and electrically connect two or more conductors.

**Connector Classes**
Categories based on shape, function, and smallest-size contact in a series.

**Connector Insert**
In connectors with metal shells, the part that holds contacts in proper arrangement while electrically insulating them from each other and from the shell.

**Contact**
The element in a connector that makes the actual electrical connection. Also the parts of a connector that actually carry the electrical current, and are touched together or separated to control the flow.

**Contact Crimp**
A contact whose rear portion is a hollow cylinder that accepts the conductor. A crimping tool is applied to swage or form the contact metal firmly against the conductor. Sometimes referred to as a solderless contact.

**Contact Resistance**
The direct-current resistance of a pair of mated contacts.

**Contact Size**
The diameter of the engagement end of a pin contact; also related to the current-carrying capacity of a contact.

**Continuity**
A continuous path for the flow of current in an electrical circuit.

**Continuous Operating Temperature**
Maximum temperature at which a component will maintain an acceptable lifetime performance, based on accelerated aging prediction.



Catalog 1654025
Revised 3-13

www.te.com

Dimensions are shown for reference purposes only. Specifications subject to change.

Dimensions are in millimeters unless otherwise specified.

USA: +1 800 522 6752
Asia Pacific: +86 0 400 820 6015
UK: +44 800 267 666

For additional support numbers please visit www.te.com

## Glossary (Continued)



**Continuous Service**
Conditions (time, temperature, environment) that describe the lifetime requirements of a component.

**Core**
1.) In cables, a component or assembly of components over which additional components, such as a shield or a sheath, are applied.
2.) Inner wall of dual-wall heat-shrinkable tubing.

**Coupling Ring**
The portion of a plug that aids in the mating and demating of a plug and receptacle and holds the plug to the receptacle.

**Cover, Electrical Connector**
An item specifically designed to cover the mating end of a connector for mechanical and/or environmental protection. Also known as a dust cover.

**Coverage**
A calculated percentage that defines the completeness with which a braid or shield covers the surface of the underlying insulated conductor or conductors.

**Crimp**
Final configuration of a terminal barrel formed by the compression of the terminal barrel and conductor.

**Crimping Die**
Portion of the crimping tool that shapes the crimp.

**Crimping Tool**
Mechanism used for crimping.

**Crosslinking**
The formation of bonds between molecular chains in a polymer by means of chemical catalyzation or electron bombardment. The properties of the resulting thermosetting material are usually improved.

**Crosslinking by Irradiation**
A method of crosslinking polymers that makes a non-flowing material. This generally improves the properties of the polymer.

**Crosstalk**
Signal interference between adjacent conductors caused by a transfer of energy.

**Crystallinity**
The portion of polymer chains that are ordered in a regular (as opposed to amorphous) structure or a crystal lattice. Crystallinity tends to improve mechanical properties and fluid resistance. Crystalline or semicrystalline materials have a well-defined melting point (shrink temperature) at which the structure becomes disordered and the polymer flows.

**CSA (Canadian Standards Association)**
An agency that has developed standard specifications for products with particular emphasis on safety in the end use.

**Curing**
See Thermoset.

**Current**
A movement or flow of electrons. Also, the measure of this flow, expressed in amperes.

**Current-carrying Capacity**
The maximum current an insulated conductor is capable of carrying without exceeding its insulation- and /or jacket-temperature limitations under specified ambient conditions. Also known as ampacity.

**Current Rating**
The maximum continuous electrical flow of current for which a device is designed to conduct for a specified time at a specified operation temperature. Usually expressed in amperes.

**Cutout**
The hole, usually round or rectangular, cut into a metal panel in order to mount a connector. The cutout may also include holes for mounting screws or bolts.

**Cut-through Resistance**
Resistance of solid material to penetration by an object (typically a closely controlled knife edge) under conditions of pressure, temperature, and other elements.

**Dielectric**
Any insulating material between two conductors that permits electrostatic attraction and repulsion to take place across it. A material having electrical insulating properties.

**Dielectric Breakdown**
The voltage required to cause an electrical failure or breakthrough of the insulation. Determined by a destructive test. See also Breakdown Voltage.

**Dielectric Constant (also K)**
The ratio of the capacitance between two electrodes with a solid, liquid, or gaseous dielectric, to the capacitance with air between the electrodes. Also called permitivity and specific inductive capacity. Generally low values are desirable for insulation.

**Dielectric Strength**
The maximum voltage a dielectric can withstand without rupture. Usually expressed as volts per mil.

**Dielectric Withstand Voltage (DWV)**
A test voltage for a wire, cable, or insulation.

**Direct Current Resistance (DCR)**
The resistance offered by any circuit to the flow of direct current.

**Direction of Lay**
The lateral direction in which the strands or elements of a cable run over the top of the cable as they recede from the observer. Expressed as right-hand or left-hand lay.

**Discontinuity**
A broken connection, or the loss of a specific connection characteristic. Also, the temporary interruption or variation in current or voltage.

**Dissipation Factor**
The ratio between the permitivity and the conductivity of a dielectric.

**Drain Wire**
In a cable, an uninsulated conductor laid over the component, or components, in a foil-shield cable. Used as a ground connection.

**Dust Cover**
See Cover, Electrical Connector.

**EID**
See See Expanded ID.

**Elastic Memory**
The ability of a crosslinked polymer to be deformed to some predetermined shape, hold that shape for a period, and then return to its original shape upon the application of heat.

**Elastomer**
A material that exhibits very low or zero crystallinity and a high degree of flexibility (rubber is a synonym).

**Elongation**
The ultimate elongation, or elongation at rupture. Expressed as a percentage of original length.

**EMI**
Abbreviation for electromagnetic interference.



Catalog 1654025
Revised 3-13
www.te.com

Dimensions are shown for reference purposes only. Specifications subject to change.
Dimensions are in millimeters unless otherwise specified.
USA: +1 800 522 6752
Asia Pacific: +86 0 400 820 6015
UK: +44 800 267 666
For additional support numbers please visit www.te.com

## Glossary (Continued)

**Encapsulant**
Description related to the way dual-wall tubing products and precoated molded parts melt and flow when heated, filling any void in the area being covered. Unlike an adhesive, an encapsulant does not form a mechanical bond to the substrate.

**Encapsulation**
Covering and sealing.

**End**
The number of fibers or strands per carrier in braiding operations.

**Environmentally Sealed**
Description of a system to keep out moisture, dirt, air, or dust that might reduce performance.

**Epoxy**
A family of thermosetting resins usually used as adhesives or encapsulants.

**ETFE (Ethylenetetrafluoroethylene)**
A fluoropolymer used as base resin for SPEC 55 wire and HCTE.

**Expanded ID (EID)**
The specified minimum (as supplied) internal diameter of tubing.

**Expansion Ratio**
An expression of how much larger the inside diameter of a tubing is before shrinking. Specifically, the relationship of the minimum (expanded) inside diameter of tubing to the maximum (recovered) inside diameter, expressed as a ratio. See also Shrink Ratio.

**Extraction Tool**
A tool used for removing contacts from a connector body.

**Extrusion**
A process that conveys plastic insulation material, generally via a screw, through forming dies and subsequently cools the insulation material to form a predetermined shape.

**Feedthru (feedthrough)**
A bushing in a wall or bulkhead with terminations on one or both sides.

**Filler**
A material used in a cable construction to fill large interstices, thus providing a round construction; can be shaped, round, or in mastic forms. A nonfunctional member used in a cable to provide a more circular cross section.

**Flame-resistant**
A descriptor applied to a material that is inherently resistant to burning.

**Flame Retardant**
A descriptor applied to a material that has been made or treated so as to resist burning.

**Flat Braid**
A braided shield composed of flat strands.

**Flat Cable**
A cable with each component in a single, flat plane.

**Flat Conductor**
A conductor having a rectangular cross section, as opposed to a round or square cross section.

**Flex Life**
A measure of the susceptibility of a conductor or other device to failure due to fatigue from repeated bending.

**Fluoropolymer**
A polymer that contains atoms of fluorine.

**Flux**
A liquid or solid that, when heated, exercises a cleaning and protective action upon surfaces.
Used to promote or facilitate fusion during soldering or welding.

**Front Release Contacts**
Connector contacts that are released from the front side of the connector and then removed from the back, wire side of the connector.

**Full Recovery Temperature, Minimum**
See Recovery Temperature.

**Gauge**
A term used to denote the physical size of a wire. See also AWG.

**Grounding Conductor**
A conductor that provides a current return path from an electrical device to ground.

**Hardness**
A general term that correlates with strength, rigidity, and resistance to abrasion or penetration. Measured on Shore or Rockwell scales. See also Shore.

**Harness**
A system providing electrical connection between two or more points.

**Heat Aging**
A test that subjects components or materials to temperatures above normal operating values to evaluate changes in performance in order to predict service life. See also Accelerated Aging.

**Heat Shock**
A test to determine the stability of a material by continuously exposing it to an extremely high temperature for a short period of time. The test was developed both to demonstrate that the material is crosslinked and to observe any problems in dripping, cracking, or flowing.

**Heat-Shrinkable Material**
A polymeric material capable of being reduced in size when exposed to heat.

**Hertz (Hz)**
A measure of frequency equal to one cycle per second.

**Hookup Wire and Cable**
Wiring used to connect various points in electronic assemblies.

**Hot-Melt Adhesive**
An adhesive that becomes activated by heating. When heated, it melts, flows over the substrate surface, and forms an adhesive bond. Reheating causes the adhesive to remelt.

**ID (Internal Diameter)**
The inside or internal diameter of a tubing.

**Impedance**
The total opposition that a circuit offers to the flow of alternating current or any other varying current at a particular frequency. The ohm is the unit of impedance. Admittance is the reciprocal of impedance.

**Impulse Test**
A high-voltage test designed to locate pinholes in the insulation of a wire or cable by applying a voltage while the wire or cable is being drawn through an electrode.

**Insert Cavity (Connector)**
A defined hole in the connector insert into which the contacts are inserted.

**Insert**
Meltable thermoplastic ring placed within a SolderSleeve device. Aids in encapsulation and sealing.

**Insert (Connector)**
Part that holds the contacts in their proper arrangement and electrically insulates them from each other and from the shell.

**Insert Arrangement (Connector)**
The number, spacing, and arrangement of contacts in a termination assembly.



Catalog 1654025
Revised 3-13

www.te.com

Dimensions are shown for reference purposes only. Specifications subject to change.

Dimensions are in millimeters unless otherwise specified.

USA: +1 800 522 6752
Asia Pacific: +86 0 400 820 6015
UK: +44 800 267 666

For additional support numbers please visit www.te.com

## Glossary (Continued)



**Insertion Tool (Connector)**
A tool used to insert removable contacts into a connector.

**Inspection Hole**
A hole placed at one end of a contact barrel to permit visual inspection, to ensure that the conductor has been inserted to the proper depth in the barrel prior to crimping or soldering.

**Insulated Terminal**
A solderless terminal with an insulated sleeve over the barrel to prevent a short circuit in certain installations.

**Insulation, Electrical**
A nonconductive material usually surrounding or separating two conductive materials. Often called the dielectric in cables designed for high-frequency use.

**Insulation, Thermal**
A nonconductive material that prevents the passage of heat.

**Insulation Resistance**
Minimum electrical resistance permitted between any pair of contacts and between conductors and grounding devices of the same connectors in various combinations. An indication of the insulating properties of a material.

**Interconnection**
The joining of one individual device with another.

**Interstice**
In a cable construction, the space or void left between or around the cabled components.

**Irradiation**
In insulations, the exposure of the material to high-energy emissions for the purpose of favorably altering the molecular structure via crosslinking.

TEFLON is a trademark of E.I. du Pont de Nemours and Company

**Jackscrew**
A screw attached to one half of a two-piece, multiple-contact connector and used to draw both halves together and to separate them.

**Jacket**
1.) A material covering over a wire or cable assembly.
2.) Outer covering of a dual-wall heat-shrinkable tubing.

**Kapton**
DuPont's trade name for polyimide film.

**Key (Connector)**
A short pin or other projection that slides into a mating slot or groove to guide two parts being assembled.

**Keying (Connector)**
Mechanical arrangement of guide pins and sockets, keying plugs, contacts, bosses, slots, keyways, inserts, or grooves in a connector housing, shell or insert that allows connectors of the same size and type to be lined up; used in situations where there is danger of making a wrong connection.

**Keyway**
The slot or groove in which a key slides.

**kV (Kilovolt)**
A unit equal to 1000 volts.

**Kynar**
Trade name (of Atofina Chemicals, Inc.) for polyvinylidene fluoride and its copolymers.

**Lacing Cord or Twine**
Used for lacing and tying cable forms, hookup wires, cable ends, cable bundles, and wire harness assemblies. Available in various materials and impregnants.

**Lanyard**
A device, attached to certain quick-disconnect connectors, that permits uncoupling and separation of connector halves by a pull on a wire or cable.

**Lay**
Refers to direction or sometimes the ratio of lay length to core diameter.

**Lay Length**
A term used in cable manufacturing to denote the distance of advance of one member, or a group of spirally twisted members in one turn, measured axially. The lay of any helical element of a cable or conductor is the axial length of a turn of the helix of that element.

**Life Cycle**
A test to determine the length of time before failure in a controlled, usually accelerated environment.

**Liner**
See Core.

**Longitudinal Change (Shrink Tubing)**
The change in length of tubing when recovered. Expressed in the percent of change from the original length.

**Loss**
Electrical energy that is dissipated as heat.

**Loss Factor**
The product of the power factor and dielectric constant of an insulating material.

**Lot Number**
The number that identifies one production run of material. Also known as a batch number.

**Low-loss Dielectric**
An insulating material that has a relatively low dielectric loss, such as polyethylene or Teflon®.

**Lug**
A termination, usually crimped or soldered to a conductor, that allows connection to be made with a retaining screw.

**Marking**
A printed identification number or symbol applied to the surface of a wire or cable.

**Mate (Connections)**
To join connector halves in a normal engaging mode.

**Megarad**
A unit for measuring radiation dosage.

**Melt/Flow Index**
Measurement of the flow of thermoplastic material under given conditions of temperature and pressure. Expressed as grams per unit of time.

**Melting Point**
The temperature at which crystallinity disappears when crystalline material is heated.

**Mil**
A unit equal to one one-thousandth of an inch (.001"); used in measuring the diameter of a conductor or thickness of insulation over a conductor.

**MIL-SPEC**
Abbreviation for Military Specification, which is a document the U.S. Government issues to define a product that will be used in military end-use applications.

**Milking Off**
Action that occurs when the inner layer (the encapsulant or adhesive) of the tubing or molded part acts as a lubricant, allowing the tubing to slip off the substrate (because the tubing wants to recover to a smaller diameter).



Catalog 1654025
Revised 3-13

www.te.com

Dimensions are shown for reference purposes only. Specifications subject to change.

Dimensions are in millimeters unless otherwise specified.

USA: +1 800 522 6752
Asia Pacific: +86 0 400 820 6015
UK: +44 800 267 666

For additional support numbers please visit www.te.com

## Glossary (Continued)

**Minimum Full Recovery Temperature**
See Recovery Temperature.

**MO (Manufacturing Order)**
A series of operation-work-order cards identifying materials to be used and the type and quantity of products to be manufactured. An MO is controlled and issued by Production Control to the manufacturing operation.

**MOD Code (Material Modification Code)**
A code designating a particular stage in the production process. Most MOD codes describe the way the product is packaged.

**MS (Manufacturing Specification)**
A set of process instructions used in the manufacturing of tubing products. Customer Logistics, Product Management, or Manufacturing Engineering initiate the MS; Manufacturing Engineering controls it. The product design and quality parameters are provided to Manufacturing Engineering by Product Development and Quality Assurance. Successful trial runs of a new product or design usually precede the initiation of an MS (see SMO). A proprietary document, an MS is not available to customers.

**Multiconductor**
More than one component within a single-cable complex.

**Multiple-Conductor Cable**
A combination of two or more components cabled together.

**Nick**
A small cut or notch in conductor strands or insulation.

**Nominal**
A descriptor applied to a dimension representing the center of the range of tolerance or a value if no tolerance is applied.

**OFT (Optional Flame Test)**
Canadian Standards Association's test for flame-retardance. Tubing with an OFT rating is highly flame-retardant.

**Ohm**
The unit of electrical resistance.

**Operating Temperature**
The maximum internal temperature at which a system, harness, or connector may operate in continuous service; generally expressed as a time and temperature.

**Operating Temperature Range**
The range between the maximum and the minimum internal temperature of insulation in a system, harness, or connector in continuous service. The lower limit is determined by low-temperature flex test.

**Optional Flame Test**
See OFT.

**Packaging**
The process of physically locating, connecting, and protecting devices or components.

**Panel**
The side or front (usually metal) of a piece of equipment on which connectors are mounted.

**Panel-mount**
Method of fixing one-half of a connector to a board, panel, or frame. Usually, the female half of the connector is the mounted portion and the male half is the removable portion.

**PC (Production Control)**
Group responsible for directing and regulating the movement of goods through the entire manufacturing cycle, from the requisitioning of raw materials to the delivery of the finished products.

**PCN**
See RPN.

**Peripheral Seal**
A seal provided around the periphery of connector inserts to prevent the ingress of fluids or contaminants at the perimeter of mated connectors.

**Permittivity**
See Dielectric Constant.

**Pick**
The number of crossovers of braiding units per inch of cable.

**Pigtail**
A short conductor or wire extending from an electrical or electronic device to serve as a jumper or ground connection.

**Pin Contact**
An electrical terminal, usually in a connector. Normally a smaller termination than a lug.

**Plastic Deformation**
Change in dimensions under a load that does not recover when the load is removed.

**Plasticizer**
A softener or lubricant added to a compound to make it easier to process or more flexible in use.

**Plating**
The overlaying of a thin coating of metal on metallic components to improve conductivity, facilitate soldering, or prevent corrosion.

**Plug**
The part of a connector that is normally "removable" from the other, permanently mounted part; usually that half of a two-piece connector that contains the pin contacts.

**Plug Connector**
An electrical connector that is intended to be attached to the free end of a conductor, wire, cable, or bundle, and that couples or mates to a receptacle connector.

**Poke Through**
A term describing stray wires in a solder joint that poke through the insulation.

**Polarization (Connectors)**
A mechanical arrangement of inserts or the shell configuration (referred to as clocking in some instances) that prohibits the mating of mismatched plugs and receptacles. See also Clocking.

**Polyamide**
A polymer formed by the reaction of a diamine and a diacid. Nylons are commercial polyamides characterized by toughness, solvent resistance, and sharp melting point.

**Polymer**
A material of high molecular weight formed by the chemical union of monomers.

**Polyolefin**
A family of polymers (such as polyethylene and polypropylene) made from olefin monomers.

**Potting**
The permanent sealing of the cable end of a connector with a compound or material that thermosets into an elastomer, to exclude moisture and/or to provide strain relief.

**Pre-etching**
The act of surface preparation before encapsulating.

**Pretinned**
Description of an electrical component to which solder has been applied prior to soldering.

**Pretinned Solder Cup**
Solder cup whose inner surfaces have been precoated

## Glossary (Continued)

with a small amount of solder.

**Preform**
Usually, the solder ring in a SolderSleeve device.

**Primary Insulation**
The inner member of a dual-wall wire insulation. The insulation applied directly on the conductor. Also referred to as the core. See also Core.

**Push-back**
That property of a braid or shield that allows the braid or shield to be pushed back easily along the cable core.

**PVC (Polyvinyl chloride)**
A polymer compound used as wire insulation.

**PVDF**
Polyvinylidene fluoride.

**Quality Assurance**
Systematic, planned, and documented activities designed to provide confidence that a product will meet specifications.

**Quality Control**
Activities that monitor, measure, and control the characteristics of a material, component, or product to documented specifications.

**Quick Disconnect**
A type of connector shell that permits rapid locking and unlocking of two connector halves.

**RA Flux**
Rosin-activated flux.

**Radiation Crosslinking**
The act of crosslinking a material with ionizing radiation. (Most TE products are radiation crosslinked, with an electron beam as the form of ionizing radiation.) See also Crosslinking by Irradiation.

**Rated Temperature**
The maximum temperature at which a component can operate for extended periods with acceptable changes in its basic properties.

**Rated Voltage**
The maximum voltage at which an electric component can operate for extended periods without undue degradation.

**Rear Release Contacts**
Connector contacts designed to be released and removed from the rear (wire side) of the connector. The removal tool engages the contact from the rear and pulls the contact out of the connector contact retainer.

**Receptacle**
Usually the fixed or stationary half of a two-piece multiple contact connector. Also the connector half usually mounted on a panel and containing socket contacts.

**Recover (Heat-shrinkable Components)**
Activation of the elastic memory principle (usually with heat) to cause a tubing or molded part to return to its original size.

**Recovered ID (RID)**
In heat-shrink tubing, the guaranteed maximum internal diameter of tubing after being freely recovered.

**Recovery Temperature**
The minimum temperature required to fully shrink a product, that is, for the product to recover completely.

**Removable Contact**
A contact that can be mechanically joined to or removed from an insert. Usually special tools are required to lock the contact in place or remove it for repair or replacement.

**Resistance**
A measure of the difficulty in moving electrical current through a conductor or insulation when a voltage is applied. It is measured in ohms.

**Ribbon Cable**
Flat cable with conductors that have been individually insulated together. Its structure is usually characterized by individual colors of insulation for each conductor, although a single color may be used for all conductors.

**RID**
See Recovered ID.

**RMA Flux**
Rosin-mildly-activated flux.

**Rope Lay**
A type of conductor lay that uses stranded conductors as components to build a larger conductor.

**RPN (Raychem Product Number)**
A 10-digit number (such as 123456-4-001) assigned to every standard product and every product manufactured on a special manufacturing order (SMO). The first 6 digits represent the PCN (Product Control Number), followed by a 1-digit MOD Code, and finally a 3-digit suffix. See also MOD Code and SMO.

**RT and RW specifications**
Specification that describes standard product properties. Qualification and acceptance inspection criteria are incorporated into RT and RW specifications. RT and RW specifications are issued and controlled by the Specifications Group.

**SCD (Specification Control Drawing)**
Drawing that defines configuration and material parameters. Issued and controlled by the specifications group, SCDs are frequently used in conjunction with RT Specifications for Thermofit products.

**Scoop-proof**
A feature that prevents the damage of contacts during misaligned mating.

**Sealant**
Soft, tacky, pliable material that seals where mechanical strength is not required.

**Sealed**
Environmentally protected by the thermoplastic inserts or core of encapsulant/adhesive that has melted down around the substrate.

**Sealing Plug**
A plug that is inserted to fill an unoccupied contact aperture in a termination assembly.

**Secant Modulus**
A measure of material stiffness; stiffer material has a higher secant modulus. More specifically, the secant modulus is the ratio of stress (nominal) to corresponding strain at any specified point on the stress-strain curve.It is expressed in force per unit area (usually kilograms per square centimeters or pounds per square inch), and reported together with the specified stress or strain.

**Service Life**
Period of time during which the product is expected to perform satisfactorily.

**Service Loop**
The extra cable required at a breakout to facilitate maintenance and servicing.

**Service Rating**
The maximum voltage or current that a termination is designed to carry continuously.

**Shelf Life**
Generally, the length of time a product or material may be stored without deterioration. Specifically, the length of time during which shrink tubing will retain its expand-





Catalog 1654025
Revised 3-13

www.te.com

Dimensions are shown for reference purposes only. Specifications subject to change.

Dimensions are in millimeters unless otherwise specified.

USA: +1 800 522 6752
Asia Pacific: +86 0 400 820 6015
UK: +44 800 267 666

For additional support numbers please visit www.te.com

## Glossary (Continued)

ed ID and return to its recovered ID. Usually not a concern—except for some "amnesic" materials. See Amnesia.

**Shell (Connector)**
The outside case, usually metallic, into which the insert (body) and contacts are assembled. Shells of mating connector halves usually provide for proper alignment and polarization as well as for protection of projecting contacts.

**Shield**
A conducting layer placed around an insulated conductor or cable to limit the penetration, or escape, of electric or electromagnetic fields, thereby preventing electromagnetic interference. The shield may be formed of metallic braid, metal tape, metal-backed foil, metal tube, or conductive polymer. Usually grounded, the shielding is carried through the connector shell, or through a special internal shell in the case of individual coaxial contacts.

**Shielding**
See Shield.

**Shielding Effectiveness (SE)**
The reduction in field strength resulting from interposing a metallic barrier between a source and receptor of electromagnetic energy.

**Shore**
A scale for comparing hardness. Higher Shore values represent harder materials. The hardness of a polymer, for example, is usually represented as Shore A or Shore D, with D being harder.

**Shrink Ratio**
An expression of how much the inside diameter of shrink tubing will reduce in size when recovered. The inverse of the expansion ratio. See also Expansion Ratio.

**Shrink Temperature, Minimum**
The minimum temperature at which a product begins to recover.

**Signal Cable**
A cable designed to carry current of less than 12 amperes per conductor.

**Skew**
Any out-of-squareness of the cut end of a piece of tubing after shrinking.

**SMO (Special Manufacturing Order)**
An order to evaluate manufacturing and production capability for a new or changed design for a customer and to provide development samples of potential products for customers. SMO products are separate and distinct from standard products. New, potential products are usually run as SMO products for a minimum of three times before being considered for manufacture as a standard product.

**Solder**
An alloy that melts at relatively low temperatures and is used to join metals with higher melt points.

**Solder Contact**
A contact or terminal having a cup, hollow cylinder, eyelet, or hook to accept a wire for a conventional soldered termination.

**Solder Cup**
A tubular end of a terminal into which a wire conductor is inserted prior to being soldered.

**Solderability**
The property of a metal surface that allows it to be readily wetted by molten solder. See also Wetting.

**Soldering**
A process of joining metallic surfaces with solder without melting the base metal.

**SolderSleeve Device**
A device of flux-coated solder preform encapsulated in a heat-recoverable plastic sleeve. Upon the application of heat, the flux and solder will melt and flow as the sleeve recovers, forcing the solder around and onto the metallic parts being joined, thus forming an electrically insulated and strain-relieved joint.

**Solid Conductor**
A conductor composed of one single strand.

**Solvent Resistance**
The ability of a material to retain physical and electrical properties after being immersed in specific solvents.

**SPC**
Silver-plated copper.

**SPC (Statistical Process Control)**
The use of statistical techniques such as control charts to analyze a process or its output so as to take appropriate actions to achieve and maintain a state of control and to improve the capability of the process.

**Specific Gravity**
The ratio of the density (mass per unit volume) of a material to that of water.

**Specific Inductive Capacity**
See Dielectric Constant.

**Splice**
A joint connecting conductors with good mechanical strength and conductivity; a terminal that permanently joins two or more wires.

**Strain Relief**
The technique for or act of removing or lessening the strain or stress on a joint, splice, or termination. SolderSleeve devices provide strain relief.

**Strain Relief Clamp**
See Cable Clamp.

**Strand**
A single unit of a conductor.

**Stranded Conductor**
A conductor composed of more than one single strand. The strands in stranded conductors are usually twisted or braided together.

**Strip**
To remove insulation from a wire or cable.

**Stripe**
A continuous longitudinal or spiral color strip applied on the surface of a wire, cable, or tubing for identification.

**Substrate**
The material—such as a wire, post, or tab—over which an interconnection device is used.

**Surface Resistance**
The ratio of the direct current applied to an insulation system to the current that passes across the surface of the system.

**Tape Wrap**
A term denoting a spirally or longitudinally applied tape material wrapped around insulated or uninsulated wire and used as a mechanical barrier.

**TC**
Tinned copper.

**Tear Test**
A test to determine the tear strength of an insulating material. Usually includes exposure to given thermal conditions or a programmed series of conditions for prescribed periods of time.



Catalog 1654025
Revised 3-13

www.te.com

Dimensions are shown for reference purposes only. Specifications subject to change.

Dimensions are in millimeters unless otherwise specified.

USA: +1 800 522 6752
Asia Pacific: +86 0 400 820 6015
UK: +44 800 267 666

For additional support numbers please visit www.te.com

## Glossary (Continued)

**Temperature Rating**
The maximum temperature at which the insulating material may be used in continuous operation without loss of its basic properties. Usually time dependent.

**Tensile Strength**
The pull stress (in force per unit area) required to break a given specimen.

**Thermal Rating**
The effect of heat or cold applied at such a rate that nonuniform thermal expansion or contraction occurs within a given material or combination of materials. In electrical terminations, the effect can cause inserts and other insulation material to pull away from the metal parts.

**Thermal Shock**
The effect of high and low temperatures applied at a rapid rate such that nonuniform thermal expansion or contraction occurs within a given material or combination of materials. The result could be stress-cracking or -shattering of material.

**Thermochromic Indicator**
Special compound that changes color when the proper wetting temperature has been reached in the solder joint.

**Thermoplastic**
A material that softens (melts and flows) when heated and becomes firm when cooled. A type of plastic that can be remelted a number of times without any important change in properties. Nylon, GE's Lexan, and PVC—examples of this type of plastic—are resilient after molding.

**Thermoset**
A material that hardens or sets when heated and, once set, cannot be resoftened by heating. This application of heat is called "curing."

**Thermosetting Plastic**
A type of plastic in which an irreversible chemical reaction takes place while the plastic is being molded under heat and pressure.

**Thermosetting Adhesive**
A curing adhesive that requires heat to promote curing. This type of plastic will not soften when reheated. See Epoxy.

**Tolerance**
The total amount by which a quantity is allowed to vary from nominal; thus, the tolerance is half the algebraic difference between the maximum and minimum limits.

**Traceability**
The ability to trace the history, application, or location of an item and like items or activities by means of recorded identification. The lot number/manufacturing order (MO) number, or SMO number used to identify items or groups of items is traceable back to inspection and procurement records.

**Transmission Cable**
Two or more transmission lines. If the structure is flat, it is sometimes called flat transmission cable to differentiate it from a round structure such as a jacketed group of coaxial cables. See also Transmission Line.

**Transmission Line**
A signal-carrying circuit with controlled electrical characteristics; used to transmit high-frequency or narrow-pulse signals.

**Triaxial Cable**
A concentrically constructed cable, with a common axis, composed of a center connector, first shield, and second shield, all insulated from each other.

**UL (Underwriters' Laboratories)**
A nonprofit independent testing organization that operates a listing service for electrical and electronic materials and equipment.

**Ultraviolet Degradation**
The degradation caused by long-time exposure of a material to sunlight or other ultraviolet rays.

**Velocity of Propagation**
The ratio of the speed of a radio frequency wave within a cable or dielectric as compared with the same wave in free space.

**Voltage**
The term most often used in place of electromotive force, potential, potential difference, or voltage drop to designate the electric pressure that exists between two points and that is capable of producing a current when a closed circuit is connected between the two points.

**Voltage Breakdown**
The voltage necessary to cause insulation failure.

**Voltage Drop**
Loss of voltage through a connection or conductor.

**Voltage Rating**
The voltage that may be continuously applied to wire.

**Volume Resistivity**
Reciprocal of conductivity; the resistance of a material to the flow of electrical current, usually expressed in ohm-cm.

**VSWR (Voltage Standing Wave Ratio)**
A measure of the uniformity of impedance along a transmission line, or the quality of the impedance match between a line and the source or load.

**VW-1**
A rating determined by the Underwriters' Laboratories' (UL) optional Vertical Wire Flame Test—the most difficult flame test for tubing. Tubings with a VW-1 rating are highly flame-retardant.

**Wall Thickness**
The thickness of the applied insulation or jacket.

**Water Absorption Test**
A method to determine the water uptake of a material. It is time and temperature dependent.

**Water Blocking**
The sticking together of insulated wires; usually caused by heat.

**Wetting (Solder)**
The formation of a relatively uniform, smooth, unbroken, and adherent film of solder to a base metal. Also, the free flow of solder alloy, with proper application of heat and flux, on a metallic surface to produce an adherent bond.

**Wicking**
The longitudinal flow of a liquid in a wire or cable construction due to capillary action. (This may also apply to solder.)

**Wire**
A single conductor covered with insulation.

**Wire Dress**
The orderly arrangement of wires and laced harnesses.

**Withstanding Voltage**
The test voltage an electrical connector can withstand for one minute without showing evidence of electrical breakdown when the voltage is applied between conductors and grounding devices of the connectors in various combinations.





Catalog 1654025
Revised 3-13

www.te.com

Dimensions are shown for reference purposes only. Specifications subject to change.

Dimensions are in millimeters unless otherwise specified.

USA: +1 800 522 6752
Asia Pacific: +86 0 400 820 6015
UK: +44 800 267 666

For additional support numbers please visit www.te.com

## Part Index


| Product or Part Number | Page Number |
|---|---|
| -3 Material | 4-25, 4-84 |
| -4 Material | 4-27 |
| -12 Material | 4-29, 4-84 |
| -25 Material | 4-31, 4-84 |
| -25S Material | 4-33 |
| -50 Material | 4-35 |
| -51 Material | 4-37 |
| -55 Material | 4-39 |
| -71 Material | 4-41 |
| -100 Material | 4-43, 4-84 |
| -100S Material | 4-45 |
| -125 Material | 4-47 |
| -770 Material | 4-49 |
| -780 Material | 4-52 |
| -790 Material | 4-55 |
| 0022E0311 | 9-78 |
| 0024A0024 | 9-78 |
| 0026A0024 | 9-78 |
| 007510-000 | 10-17 |
| 022611-000 | 10-14 |
| 026239-000 | 10-33 |
| 047011-000 | 10-4 |
| 047143-000 | 10-23 |
| 049857-000 | 10-31 |
| 065583-000 | 10-8 |
| 071965-000 | 10-27 |
| 072845-000 | 10-10 |
| 074131-000 | 10-25 |
| 100-A-* | 9-29 |
| 100A0111-10-*, -12, -14, -16, -18, -20, -22, -24 | 9-28 |
| 100-G-* | 9-31 |
| 100G0111-0.40-* | 9-32 |
| 100G0111-0.50-* | 9-32 |
| 100G0111-0.60-* | 9-32 |
| 100G0111-0.75-* | 9-32 |
| 100G0111-1.00-* | 9-32 |
| 100G0111-1.20-* | 9-32 |
| 100G0111-1.50-* | 9-32 |
| 100G0111-2.00-* | 9-32 |
| 100G0111-2.50-* | 9-32 |
| 100G0111-3.00-* | 9-32 |
| 100G0111-4.00-* | 9-32 |
| 101A011 | 4-58 |
| 101A011 to 094 | 4-58 |
| 101A021 | 4-58 |
| 101A031 | 4-58 |
| 101A041 | 4-58 |
| 101A062 | 4-58 |
| 101A083 | 4-58 |
| 101A094 | 4-58 |
| 10595-24 | 9-78 |
| 10606-26 | 9-78 |
| 10612, 10613, 10614 | 8-84 |
| 10612-24 | 9-78 |
| 10613-24 | 9-78 |

| Product or Part Number | Page Number |
|---|---|
| 10613-9 | 8-105 |
| 10613-96 | 8-105 |
| 10614-24 | 9-78 |
| 106503-000 | 10-20 |
| 112676-000 | 10-16 |
| 118902-000 | 10-17 |
| 132692-000 | 10-21 |
| 139128-000 | 10-21 |
| 168927-000 | 10-6 |
| 170224-000 | 10-8 |
| 173643-000 | 10-8 |
| 176247-000 | 10-20 |
| 180245-000 | 10-8 |
| 200˚ MiniSeal Crimp Splices | 8-28 to 8-29 |
| 202A111 | 4-62, 4-86 |
| 202A111 to 196 | 4-62 |
| 202A121 | 4-62 |
| 202A132 | 4-62 |
| 202A142 | 4-62 |
| 202A153 | 4-62 |
| 202A163 | 4-62 |
| 202A174 | 4-62 |
| 202A185 | 4-62 |
| 202A196 | 4-62 |
| 202C611 | 4-21,4-23, 4-63, 6-31, 6-33, 6-36, 6-39, 6-41, 6-51, 6-53, 6-55, 6-59, 6-61, 6-63, 6-67, 6-71, 6-74, 6-76 |
| 202C621 | 4-21,4-23, 4-63, 6-31, 6-33, 6-36, 6-39, 6-38, 6-41 6-51, 6-53, 6-55, 6-59, 6-60, 6-61, 6-63, 6-67, 6-68, 6-69, 6-71, 6-74, 6-76 |
| 202C632 | 4-21, 4-23, 4-63, 6-31, 6-33, 6-36, 6-38,6-39, 6-41, 6-46, 6-51, 6-52, 6-53, 6-55, 6-59, 6-60, 6-61, 6-63, 6-67, 6-68, 6-69, 6-71, 6-74, 6-76 |
| 202C642 | 4-21, 4-23, 4-63, 6-31, 6-33, 6-36, 6-38, 6-39, 6-41, 6-46, 6-51, 6-52, 6-53, 6-55, 6-59, 6-60, 6-61, 6-63, 6-67, 6-68, 6-69, 6-71, 6-74, 6-76 |
| 202C653 | 4-21, 4-23, 4-63, 6-31, 6-33, 6-36, 6-38, 6-39,6-41, 6-46, 6-51, 6-52, 6-53, 6-55. 6-59, 6-60, 6-61, 6-63, 6-68, 6-69, 6-71, 6-74, 6-76, 6-67 |
| 202C663 | 4-21, 4-63, 6-31, 6-33, 6-41, 6-51, 6-55, 6-59, 6-63, 6-67, 6-71, 6-76 |
| 202D121 | 4-22, 4-64 |
| 202D132 | 4-22, 4-64 |
| 202D142 | 4-22, 4-64 |
| 202D153 | 4-22, 4-64 |
| 202D163 | 4-22- 4-64 |
| 202D174 | 4-22- 4-64 |
| 202D185 | 4-22, 4-64 |
| 202D196 | 4-22, 4-64 |
| 202D211 | 4-22, 4-65, 6-31, 6-33, 6-36, 6-39, 6-53, 6-55, 6-59, 6-61, 6-63, 6-67, 6-69, 6-71, 6-74, 6-76 |
| 202D211/202F211 | 4-23 |

| Product or Part Number | Page Number |
|---|---|
| 202D221 | 4-22, 4-65, 6-33, 6-36, 6-38, 6-39, 6-52, 6-53, 6-55, 6-59, 6-60, 6-61, 6-63, 6-67, 6-68, 6-69, 6-71 6-74, 6-76 |
| 202D232 | 4-22, 4-65, 6-31, 6-33, 6-36, 6-39, 6-39, 6-46, 6-52, 6-53, 6-55, 6-59, 6-60, 6-61, 6-63, 6-67, 6-68, 6-69, 6-71, 6-74, 6-76 |
| 202D242 | 4-22, 4-65, 6-31, 6-33, 6-36, 6-38, 6-39, 6-46, 6-52, 6-53, 6-55, 6-59, 6-60, 6-61, 6-63, 6-67, 6-68, 6-69, 6-71, 6-74, 6-76 |
| 202D253 | 4-22, 4-65, 6-31, 6-33, 6-36, 6-38, 6-39, 6-46, 6-52, 6-53, 6-55, 6-59, 6-60, 6-61, 6-63, 6-67, 6-68, 6-69, 6-71, 6-75, 6-76 |
| 202D263 | 4-22, 4-65, 6-31, 6-33, 6-36, 6-38, 6-39, 6-46, 6-52, 6-53, 6-55, 6-59, 6-60, 6-61, 6-63, 6-67, 6-68, 6-69, 6-71, 6-74, 6-76 |
| 202D274 | 4-22, 4-65, 6-31, 6-33, 6-74 |
| 202D285 | 4-22, 4-65, 6-31 |
| 202D296 | 4-22,4-65, 6-31 |
| 202D299 | 4-22, 4-65, 6-31 |
| 202D921 | 4-66 |
| 202D923 | 4-66 |
| 202D953 | 4-66 |
| 202D963 | 4-66 |
| 202F211 | 4-21, 4-67 |
| 202F221 | 4-21, 4-67 |
| 202F232 | 4-21, 4-67 |
| 202F242 | 4-21, 4-67 |
| 202F253 | 4-21. 4-67 |
| 202F263 | 4-21, 4-67 |
| 202F274 | 4-21, 4-67 |
| 202G211 | 4-68 |
| 202G221 | 4-21, 4-68 |
| 202G232 | 4-21, 4-68 |
| 202G242 | 4-21, 4-68 |
| 202G253 | 4-21, 4-69 |
| 202G621 | 4-21, 4-69 |
| 202G632 | 4-21, 4-69 |
| 202G642 | 4-21, 4-69 |
| 202G653 | 4-21, 4-69 |
| 202K111 | 4-86 |
| 202K121 | 4-22, 4-70, 6-31, 6-33, 6-36, 6-39, 6-41, 6-51, 6-53, 6-55, 6-59, 6-61, 6-63, 6-67, 6-69, 6-71, 6-74, 6-76 |
| 202K132 | 4-22, 4-70, 6-31, 6-33, 6-38, 6-39, 6-41, 6-51, 6-52, 6-53, 6-55, 6-59, 6-60, 6-61, 6-63, 6-67, 6-68, 6-71, 6-74, 6-76 |
| 202K142 | 4-22, 4-70, 6-31, 6-33, 6-38, 6-39, 6-41, 6-46, 6-51, 6-52, 6-53, 6-55, 6-59, 6-60, 6-61, 6-63, 6-67, 6-68, 6-71, 6-74, 6-76 |
| 202K153 | 4-22, 4-70, 6-31, 6-33, 6-36, 6-38, 6-39, 6-41, 6-46, 6-51, 6-52, 6-53, 6-55, 6-59, 6-60, 6-61, 6-63, 6-67, 6-68, 6-71, 6-74, 6-76 |

## Part Index (Continued)


| Product or Part Number | Page Number |
|---|---|
| 202K163 | 4-22, 4-70, 6-31, 6-33, 6-36,6-38, 6-39, 6-41, 6-46, 6-51, 6-52, 6-53, 6-55, 6-59, 6-60, 6-61, 6-63, 6-67, 6-68, 6-71, 6-74, 6-76 |
| 202K174 | 4-22, 4-70, 6-31, 6-33, 6-36, 6-38, 6-39, 6-41, 6-46, 6-51, 6-52, 6-53, 6-55, 6-59, 6-60, 6-61, 6-63, 6-67, 6-68, 6-71, 6-74, 6-76 |
| 202K185 | 4-22, 4-70, 6-31, 6-33, 6-36, 6-38, 6-39, 6-41, 6-46, 6-51, 6-52, 6-53, 6-55, 6-59, 6-60, 6-61, 6-63, 6-67, 6-68, 6-71, 6-74, 6-76 |
| 202K232 | 6-36, 6-41, 6-51, 6-44, 6-59, 6-63, 6-67, 6-71, 6-74, 6-76 |
| 202S174 | 4-64 |
| 202W232 | 6-31, 6-33, 6-36, 6-39, 6-41, 6-51, 6-53, 6-55, 6-61, 6-63, 6-69, 6-71, 6-76 |
| 202W302 | 4-109 |
| 202W312 | 4-109 |
| 202W321 | 4-109 |
| 202W331 | 4-109 |
| 202W342 | 4-109 |
| 203W301 | 4-85 |
| 204W201 | 4-85 |
| 204W221 | 4-86 |
| 207W213 | 4-88 |
| 207W223 | 4-88 |
| 207W234 | 4-88 |
| 207W245 | 4-88 |
| 207W256 | 4-88 |
| 214A011 | 4-71 |
| 214A021 | 4-71 |
| 214A032 | 4-71 |
| 214A042 | 4-71 |
| 214A052 | 4-71 |
| 214A311 | 4-72 |
| 214A321 | 4-72 |
| 214A332 | 4-72 |
| 214A342 | 4-72 |
| 214A352 | 4-72 |
| 222899-000 | 10-10 |
| 222A111 | 4-73 |
| 222A121 | 4-73 |
| 222A132 | 4-73 |
| 222A142 | 4-73 |
| 222A152 | 4-73 |
| 222A163 | 4-73 |
| 222A174 | 4-73 |
| 222A185 | 4-73 |
| 222A196 | 4-73 |
| 222D121 | 4-22, 4-74 |
| 222D132 | 4-22, 4-74 |
| 222D142 | 4-22, 4-74 |
| 222D152 | 4-74 |
| 222D153 | 4-22 |
| 222D163 | 4-22, 4-74 |
| 222D174 | 4-22, 4-74 |
| 222D185 | 4-22, 4-74 |
| 222D196 | 4-22, 4-74 |
| 222D211 | 4-22, 4-75, 6-31, 6-33, 6-39, 6-53, 6-55, 6-59, 6-61, 6-67, 6-69, 6-71, 6-74, 6-76 |
| 222D221 | 6-36 |
| 222D221 | 4-22, 4-75, 6-36, 6-31, 6-33, 6-38, 6-39, 6-52, 6-53, 6-55, 6-59, 6-60, 6-61, 6-67, 6-68, 6-69, 6-71, 6-74, 6-76 |
| 222D232 | 4-22, 4-75, 6-31, 6-33, 6-36, 6-39, 6-46, 6-52, 6-53, 6-55, 6-59, 6-60, 6-61, 6-67, 6-68, 6-69, 6-71,6-74, 6-76 |
| 222D242 | 4-22, 4-75, 6-31, 6-33, 6-36, 6-38, 6-39, 6-46, 6-52, 6-53, 6-55, 6-59, 6-60, 6-61, 6-67, 6-68, 6-69, 6-71,6-74, 6-76 |
| 222D253 | 4-22, 4-75, 6-31, 6-33, 6-36, 6-38, 6-39, 6-46, 6-52, 6-53, 6-55, 6-59, 6-60, 6-61, 6-67, 6-68, 6-69, 6-71,6-74, 6-76 |
| 222D263 | 4-22, 4-75, 6-31, 6-33, 6-36, 6-38, 6-39, 6-46, 6-52, 6-53, 6-55, 6-59, 6-60, 6-61, 6-67, 6-68, 6-69, 6-71,6-74, 6-76 |
| 222D274 | 4-23, 4-22, 4-75, 6-31, 6-33, 6-36, 6-74 |
| 222D285 | 4-22, 4-23, 4-75, 6-31 |
| 222D296 | 4-22, 4-75, 6-31 |
| 222D299 | 4-22, 4-75, 6-31 |
| 222D632 | 6-74 |
| 222D921 | 4-76 |
| 222D932 | 4-76 |
| 222D953 | 4-76 |
| 222D963 | 4-76 |
| 222F211 | 4-21, 4-77 |
| 222F221 | 4-21, 4-77 |
| 222F232 | 4-21, 4-77 |
| 222F242 | 4-21, 4-77 |
| 222F253 | 4-21, 4-77 |
| 222F263 | 4-21, 4-77 |
| 222F274 | 4-21, 4-77 |
| 222F285 | 4-21, 4-77 |
| 222K121 | 4-22, 4-78, 6-31, 6-33, 6-36, 6-39, 6-53, 6-55, 6-59, 6-61, 6-63, 6-67, 6-69, 6-71, 6-74, 6-76 |
| 222K132 | 4-22, 4-78, 6-31, 6-38, 6-36, 6-39, 6-52, 6-53, 6-55, 6-59, 6-60, 6-61, 6-63, 6-67, 6-69, 6-68, 6-71, 6-74, 6-76 |
| 222K142 | 4-22, 4-78, 6-31, 6-33, 6-38, 6-36, 6-39, 6-52, 6-53, 6-55, 6-59, 6-60, 6-61, 6-63, 6-67, 6-69, 6-68, 6-71, 6-74, 6-76 |
| 222K152 | 4-78, 6-31, 6-33, 6-36, 6-38, 6-39, 6-52, 6-53, 6-55, 6-59, 6-60, 6-61, 6-63, 6-67, 6-68, 6-69, 6-71, 6-74, 6-76 |
| 222K153 | 4-22, 6-55 |
| 222K163 | 4-22, 4-78, 6-31, 6-38, 6-36, 6-39, 6-52, 6-53, 6-55, 6-59, 6-60, 6-61, 6-63, 6-67, 6-69, 6-68, 6-69, 6-71, 6-74, 6-76 |
| 222K174 | 4-22, 4-78, 6-31, 6-33, 6-38, 6-36, 6-39, 6-52, 6-53, 6-55, 6-59, 6-60, 6-61, 6-63, 6-67, 6-69, 6-68, 6-69, 6-71, 6-74, 6-76 |
| 222K185 | 4-22, 4-78, 6-31, 6-33, 6-36, 6-53, 6-55, 6-59, 6-63, 6-67, 6-69, 6-68, 6-69, 6-71, 6-74, 6-76 |
| 222K232 | 6-38 |
| 223W601 | 4-87 |
| 224W201 | 4-87 |
| 224W221 | 4-87 |
| 231866-000 | 10-12 |
| 234A011 | 4-79 |
| 234A021 | 4-79 |
| 234A032 | 4-79 |
| 234A042 | 4-79 |
| 234A052 | 4-79 |
| 234A061 | 4-79 |
| 234A071 | 4-79 |
| 234A111 | 4-80 |
| 234A121 | 4-80 |
| 234A132 | 4-80 |
| 234A142 | 4-80 |
| 234A152 | 4-80 |
| 234A111 | 4-81 |
| 234A621 | 4-81 |
| 234A632 | 4-81 |
| 234A642 | 4-81 |
| 234A652 | 4-81 |
| 234A661 | 4-81 |
| 234A671 | 4-81 |
| 242W042 | 4-82 |
| 242W063 | 4-82 |
| 2524H0524 | 9-80 |
| 2526H0524 | 9-80 |
| 2530A0314 | 9-80 |
| 277774-000 | 10-20 |
| 281917-000 | 10-2 |
| 289588-000 | 10-16 |
| 299155-000 | 10-6 |
| 301A011 | 4-93 |
| 301A022 | 4-93 |
| 301A028 | 4-93 |
| 301A034 | 4-93 |
| 301A048 | 4-93 |
| 301A511 | 4-94 |
| 301A512 | 4-94 |
| 301A513 | 4-94 |
| 301A514 | 4-94 |
| 332A112 | 4-95 |
| 332A123 | 4-95 |
| 332A134 | 4-95 |
| 332A148 | 4-95 |
| 332A158 | 4-95 |






Catalog 1654025
Revised 3-13

www.te.com

Dimensions are shown for reference purposes only. Specifications subject to change.

Dimensions are in millimeters unless otherwise specified.

USA: +1 800 522 6752
Asia Pacific: +86 0 400 820 6015
UK: +44 800 267 666

For additional support numbers please visit www.te.com

## Part Index (Continued)


| Product or Part Number | Page Number |
|---|---|
| 338605-000 | 10-20 |
| 340970-000 | 10-12 |
| 342A012 | 4-96 |
| 342A024 | 4-96 |
| 342A034 | 4-96 |
| 342A048 | 4-96 |
| 342A058 | 4-96 |
| 3439-01-173-8810 | 10-2 |
| 362A014 | 4-97 |
| 362A024 | 4-97 |
| 362A114 | 4-97 |
| 381A301 | 4-98 |
| 381A302 | 4-98 |
| 381A303 | 4-98 |
| 381A304 | 4-98 |
| 382A012 | 4-99 |
| 382A023 | 4-99 |
| 382A034 | 4-99 |
| 382A046 | 4-99 |
| 382C312 | 4-100 |
| 382C312, 322 and 332 | 4-100 |
| 382C322 | 4-100 |
| 385828-000 | 10-12 |
| 389363-000 | 10-33 |
| 392A012 to 046 | 4-99 |
| 395241-000 | 10-3 |
| 400W242 | 4-110 |
| 411993-000 | 10-8, 10-10 |
| 413186-000 | 10-3 |
| 431468-000 | 10-20 |
| 434366-000 | 10-12 |
| 44-* | 9-6 |
| 441753-000 | 10-12 |
| 444817-000 | 10-14 |
| 44A011X, 012X, 021X, 031X, 081X | 9-8 |
| 44A111X, 112X, 121X, 181X | 9-9 |
| 462047-000 | 10-33 |
| 462A011 | 4-101 |
| 462A011 to 060 | 4-101 |
| 462A023 | 4-101 |
| 462A034 | 4-101 |
| 462A046 | 4-101 |
| 462A060 | 4-101 |
| 462A421 | 4-102 |
| 462A422 | 4-102 |
| 462A423 | 4-102 |
| 462A424 | 4-102 |
| 481321-000 | 10-20 |
| 4940-00-148-9847 | 10-2 |
| 4940-00-148-9848 | 10-2 |
| 4940-00-609-4993 | 10-2 |
| 4940-01-043-7634 | 10-2 |
| 5012A3311 | 8-68 |
| 5012E1339 | 8-68 |
| 5012E1339 | 9-75 |
| 5012M1612 | 9-75 |

| Product or Part Number | Page Number |
|---|---|
| 5019D3318 | 8-68 |
| 5020A1311 | 8-68 |
| 5022M1809 | 9-82 |
| 5022M5809 | 9-82 |
| 5022W0809 | 9-82 |
| 5022W1809 | 9-82 |
| 5024A1311 | 8-68, 9-75 |
| 5024A13XX | 8-56 |
| 5024A1661 | 9-78 |
| 5026A1664 | 9-78 |
| 5026D1027 | 9-75 |
| 5028A1317 | 8-68 |
| 5028A13XX | 8-56 |
| 5030A1317 | 8-68, 9-75 |
| 5030A13XX | 8-56 |
| 5030A1424 | 9-75 |
| 524325-000 | 10-21 |
| 529600-000 | 10-17 |
| 538361-000 | 10-12 |
| 547918-000 | 10-20 |
| 55*01X1-AWG-Y | 9-19 |
| 55*01X2-AWG-Y | 9-19 |
| 55*01X3-AWG-Y | 9-19 |
| 55*01X4-AWG-Y | 9-19 |
| 55*01X6-AWG-Y | 9-19 |
| 55*08X1-AWG-Y | 9-19 |
| 55*08X2-AWG-Y | 9-19 |
| 55*08X3-AWG-Y | 9-19 |
| 55*08X4-AWG-Y | 9-19 |
| 55*08X6-AWG-Y | 9-19 |
| 55*11X1-AWG-Y | 9-19 |
| 55*11X2-AWG-Y | 9-19 |
| 55*11X3-AWG-Y | 9-19 |
| 55*11X4-AWG-Y | 9-19 |
| 55*11X6-AWG-Y | 9-19 |
| 55*-18X1-AWG-Y | 9-19 |
| 55*-18X2-AWG-Y | 9-19 |
| 55*-18X3-AWG-Y | 9-19 |
| 55*-18X4-AWG-Y | 9-19 |
| 55*-18X6-AWG-Y | 9-19 |
| 55*21X1-AWG-Y | 9-19 |
| 55*21X2-AWG-Y | 9-19 |
| 55*21X3-AWG-Y | 9-19 |
| 55*21X4-AWG-Y | 9-19 |
| 55*21X6-AWG-Y | 9-19 |
| 55*-28X1-AWG-Y | 9-19 |
| 55*-28X2-AWG-Y | 9-19 |
| 55*-28X3-AWG-Y | 9-19 |
| 55*-28X4-AWG-Y | 9-19 |
| 55*-28X6-AWG-Y | 9-19 |
| 55*41X1-AWG-Y | 9-19 |
| 55*41X2-AWG-Y | 9-19 |
| 55*41X3-AWG-Y | 9-19 |
| 55*41X4-AWG-Y | 9-19 |
| 55*41X6-AWG-Y | 9-19 |
| 55*48X1-AWG-Y | 9-19 |

| Product or Part Number | Page Number |
|---|---|
| 55*48X2-AWG-Y | 9-19 |
| 55*48X3-AWG-Y | 9-19 |
| 55*48X4-AWG-Y | 9-19 |
| 55*48X6-AWG-Y | 9-19 |
| 55/-Outer Space | 9-16 |
| 554196-000 | 10-16 |
| 55A-* | 9-15 |
| 55A0111 | 9-18 |
| 55A0112 | 9-18 |
| 55A0113 | 9-18 |
| 55A0114 | 9-18 |
| 55A0116 | 9-18 |
| 55A011X | 9-13 |
| 55A012X | 9-13 |
| 55A0211 | 9-18 |
| 55A0212 | 9-18 |
| 55A0213 | 9-18 |
| 55A0214 | 9-18 |
| 55A0216 | 9-18 |
| 55A0711 | 9-18 |
| 55A0712 | 9-18 |
| 55A0713 | 9-18 |
| 55A0714 | 9-18 |
| 55A0716 | 9-18 |
| 55A0811 | 9-18 |
| 55A0812 | 9-18 |
| 55A0813 | 9-18 |
| 55A0814 | 9-18 |
| 55A0816 | 9-18 |
| 55A081X | 9-13 |
| 55A082X | 9-13 |
| 55A111X | 9-13 |
| 55A112X | 9-13 |
| 55A181X | 9-13 |
| 55A182X | 9-13 |
| 55A6169 | 9-64 |
| 55A8002 | 9-64 |
| 55A8131 | 9-64 |
| 55FA0511 | 9-72 |
| 55FA0514-10* | 9-67 |
| 55FA0514-12* | 9-67 |
| 55FA0514-14* | 9-67 |
| 55FA0514-16* | 9-67 |
| 55FA0514-18* | 9-67 |
| 55FA0514-20* | 9-67 |
| 55FA0514-22* | 9-67 |
| 55FA0514-24* | 9-67 |
| 55FA0521-14* | 9-68 |
| 55FA0521-16* | 9-68 |
| 55FA0521-18* | 9-68 |
| 55FA0521-20* | 9-68 |
| 55FA0521-22* | 9-68 |
| 55FA0524-24* | 9-68 |
| 55FA0531-14* | 9-68 |
| 55FA0531-16* | 9-68 |
| 55FA0531-18* | 9-68 |




Catalog 1654025
Revised 3-13

www.te.com

Dimensions are shown for reference purposes only. Specifications subject to change.

Dimensions are in millimeters unless otherwise specified.

USA: +1 800 522 6752
Asia Pacific: +86 0 400 820 6015
UK: +44 800 267 666

For additional support numbers please visit www.te.com

## Part Index (Continued)


| Product or Part Number | Page Number |
|---|---|
| 55FA0531-20* | 9-68 |
| 55FA0531-22* | 9-68 |
| 55FA0534-24* | 9-68 |
| 55FA0541-14* | 9-68 |
| 55FA0541-16* | 9-68 |
| 55FA0541-18* | 9-68 |
| 55FA0541-20* | 9-68 |
| 55FA0541-22* | 9-68 |
| 55FA0544-24* | 9-68 |
| 55FA0551-14* | 9-68 |
| 55FA0551-16* | 9-68 |
| 55FA0551-18* | 9-68 |
| 55FA0551-20* | 9-68 |
| 55FA0551-22* | 9-68 |
| 55FA0554-24* | 9-68 |
| 55FAB1511 | 9-72 |
| 55FAF0512-10* | 9-67 |
| 55FAF0512-12* | 9-67 |
| 55FAF0512-14* | 9-67 |
| 55FAF0512-16* | 9-67 |
| 55FAF0512-18* | 9-67 |
| 55FAF0512-20* | 9-67 |
| 55FAF0512-22* | 9-67 |
| 55FAF0522-14* | 9-69 |
| 55FAF0522-16* | 9-69 |
| 55FAF0522-18* | 9-69 |
| 55FAF0522-20* | 9-69 |
| 55FAF0522-22* | 9-69 |
| 55FAF0532-14* | 9-69 |
| 55FAF0532-16* | 9-69 |
| 55FAF0532-18* | 9-69 |
| 55FAF0532-20* | 9-69 |
| 55FAF0532-22* | 9-69 |
| 55FAF0542-14* | 9-69 |
| 55FAF0542-16* | 9-69 |
| 55FAF0542-18* | 9-69 |
| 55FAF0542-20* | 9-69 |
| 55FAF0542-22* | 9-69 |
| 55FAF0552-14* | 9-69 |
| 55FAF0552-16* | 9-69 |
| 55FAF0552-18* | 9-69 |
| 55FAF0552-20* | 9-69 |
| 55FAF0552-22* | 9-69 |
| 55FAF7128-24* | 9-67 |
| 55FAF7134-24* | 9-69 |
| 55FAF7135-24* | 9-69 |
| 55FAF7136-24* | 9-69 |
| 55FAF7137-24* | 9-69 |
| 55FB1511-10* | 9-70 |
| 55FB1511-12* | 9-70 |
| 55FB1511-14* | 9-70 |
| 55FB1511-16* | 9-70 |
| 55FB1511-18* | 9-70 |
| 55FB1511-20* | 9-70 |
| 55FB1511-22* | 9-70 |
| 55FB1514-24* | 9-70 |

| Product or Part Number | Page Number |
|---|---|
| 55FB1521-14* | 9-70 |
| 55FB1521-16* | 9-70 |
| 55FB1521-18* | 9-70 |
| 55FB1521-20* | 9-70 |
| 55FB1521-22* | 9-70 |
| 55FB1524-24* | 9-70 |
| 55FB1531-14* | 9-70 |
| 55FB1531-16* | 9-70 |
| 55FB1531-18* | 9-70 |
| 55FB1531-20* | 9-70 |
| 55FB1531-22* | 9-70 |
| 55FB1534-24* | 9-70 |
| 55FB1541-14* | 9-70 |
| 55FB1541-16* | 9-70 |
| 55FB1541-18* | 9-70 |
| 55FB1541-20* | 9-70 |
| 55FB1541-22* | 9-70 |
| 55FB1544-24* | 9-70 |
| 55FB1551-14* | 9-70 |
| 55FB1551-16* | 9-70 |
| 55FB1551-18* | 9-70 |
| 55FB1551-20* | 9-70 |
| 55FB1551-22* | 9-70 |
| 55FB1554-24* | 9-70 |
| 55FB7129-* | 9-71 |
| 55FBF2512-10* | 9-71 |
| 55FBF2512-12* | 9-71 |
| 55FBF2512-14* | 9-71 |
| 55FBF2512-16* | 9-71 |
| 55FBF2512-18* | 9-71 |
| 55FBF2512-20* | 9-71 |
| 55FBF2512-22* | 9-71 |
| 55FBF2522-14* | 9-71 |
| 55FBF2522-16* | 9-71 |
| 55FBF2522-18* | 9-71 |
| 55FBF2522-20* | 9-71 |
| 55FBF2522-22* | 9-71 |
| 55FBF2532-14* | 9-71 |
| 55FBF2532-16* | 9-71 |
| 55FBF2532-18* | 9-71 |
| 55FBF2532-20* | 9-71 |
| 55FBF2532-22* | 9-71 |
| 55FBF2542-14* | 9-71 |
| 55FBF2542-16* | 9-71 |
| 55FBF2542-18* | 9-71 |
| 55FBF2542-20* | 9-71 |
| 55FBF2542-22* | 9-71 |
| 55FBF2552-14* | 9-71 |
| 55FBF2552-16* | 9-71 |
| 55FBF2552-18* | 9-71 |
| 55FBF2552-20* | 9-71 |
| 55FBF2552-22* | 9-71 |
| 55FBF7130-* | 9-71 |
| 55FBF7131-* | 9-71 |
| 55FBF7132-* | 9-71 |
| 55FBF7133-* | 9-71 |

| Product or Part Number | Page Number |
|---|---|
| 55LF-* | 9-15 |
| 55PC | 9-12 |
| 55PC-* | 9-17 |
| 55PC021X | 9-14 |
| 55PC022X | 9-14 |
| 55PC121X | 9-14 |
| 55PC122X | 9-14 |
| 55PLF-* | 9-17 |
| 562A011 | 4-103 |
| 562A022 | 4-103 |
| 562A032 | 4-103 |
| 562A043 | 4-103 |
| 562A054 | 4-103 |
| 562A067 | 4-103 |
| 574557-000 | 10-8 |
| 582602-000 | 10-2 |
| 584313-000 | 10-23 |
| 584781-000 | 10-21 |
| 585643-000 | 10-20 |
| 588701-000 | 10-20 |
| 619690-000 | 10-21 |
| 629602-000 | 10-16 |
| 6S100-200 FR | 4-107 |
| 704393-000 | 10-27 |
| 714529-000 | 10-25 |
| 727799-000 | 10-10 |
| 740331-000 | 10-31 |
| 747235-000 | 10-8 |
| 747525-000 | 10-20 |
| 7518A1311 | 8-68 |
| 7520A1311 | 9-75 |
| 7520A1662 | 9-78 |
| 7522A1311 | 8-68 |
| 7523D1331 | 8-68 |
| 7524A1311 | 8-68 |
| 7526A13XX | 8-56 |
| 7526J1660 | 9-78 |
| 7528A1317 | 8-68 |
| 7528H1424 | 9-75 |
| 7530A1317 | 8-68 |
| 7530A13XX | 8-56 |
| 7530H1424 | 9-75 |
| 755928-000 | 10-21 |
| 773898-000 | 10-12 |
| 7820D0331 | 9-78 |
| 7824E0422 | 9-78 |
| 795257-000 | 10-8 |
| 81-* | 9-22 |
| 813914-000 | 10-12 |
| 82-* | 9-22 |
| 827429-000 | 10-23 |
| 832011-000 | 10-14 |
| 839218-000 | 10-12 |
| 843800-000 | 10-31 |
| 859855-000 | 10-8 |
| 879865-000 | 10-20 |






Catalog 1654025
Revised 3-13

www.te.com

Dimensions are shown for reference purposes only. Specifications subject to change.

Dimensions are in millimeters unless otherwise specified.

USA: +1 800 522 6752
Asia Pacific: +86 0 400 820 6015
UK: +44 800 267 666

For additional support numbers please visit www.te.com

## Part Index (Continued)


| Product or Part Number | Page Number |
|---|---|
| 8S14-50 FR | 4-107 |
| 8S23-75 FR | 4-107 |
| 8S42-100 FR | 4-107 |
| 926935-000 | 10-33 |
| 927079-000 | 10-10 |
| 928826-000 | 10-12 |
| 930321-000 | 10-14 |
| 94375-000 | 10-17 |
| 9522A1311 | 9-75 |
| 9524A1311 | 8-68 |
| 9527A1318 | 8-68 |
| 9527A13XX | 8-56 |
| 9527J1528 | 9-75 |
| 9528A13XX | 8-56 |
| 9530A13XX | 8-56 |
| 9530E1014 | 8-68, 9-75 |
| 955018-000 | 10-29 |
| 958770-000 | 10-12 |
| 966953-000 | 10-20 |
| 981721-000 | 10-31 |
| 985426-000 | 10-12 |
| 988204-000 | 10-20 |
| 988208-000 | 10-20 |
| 988285-000 | 10-20 |
| 988299-000 | 10-20 |
| 988300-000 | 10-20 |
| 988301-000 | 10-20 |
| 988303-000 | 10-20 |
| 988314-000 | 10-20 |
| 988328-000 | 10-20 |
| 988382-000 | 10-20 |
| 988596-000 | 10-20 |
| 989172-000 | 10-12 |
| 991017-000 | 10-33 |
| 991018-000 | 10-33 |
| 991026-000 | 10-33 |
| 991027-000 | 10-33 |
| 992008-000 | 10-4 |
| 992013-000 | 10-4 |
| 993020-000 | 10-17 |
| 993693-000 | 10-17 |
| 993695-000 | 10-17 |
| 993702-000 | 10-8 |
| 993770-000 | 10-17 |
| 993850-000 | 10-3 |
| 993872-000 | 10-3 |
| 993877-000 | 10-3 |
| 993917-000 | 10-3 |
| 993938-000 | 10-3 |
| 994350-00 | 10-17 |
| 994590-000 | 10-17 |
| 9951119-000 | 10-8 |
| 99-M-* | 9-26 |
| 99M011X, 1111, 1121 | 9-24 |
| A22932-000 | 10-14 |
| A23120-000 | 10-14 |

| Product or Part Number | Page Number |
|---|---|
| A42716-000 | 10-12 |
| A93538-000 | 10-14 |
| A96930-000 | 10-31 |
| AA-400 Super Heater Tool | 10-2 |
| AD-1319-9 Holding Fixture Tool | 10-3 |
| AD-1377 | 10-4 |
| AD-1381 | 8-22, 10-4 |
| AD-1386 | 10-4 |
| AD-1522 | 10-4 |
| AD-1962 | 5-5 |
| AD-3050-SEAL-TEST-EQUIP | 10-5, 10-6 |
| AD-500 Tinel-Lock tool | 10-7 |
| AD-5000 Tinel-ASSY (240v) | 6-85 |
| AD-5010 Tinel Bench | 10-9, 10-10 |
| Adhesives | 5-1 |
| ADK Rectangular Backshells | 2-3 |
| AFR 35-1.5 | 9-117 |
| AFR 35-10 | 9-117 |
| AFR 35-120 | 9-117 |
| AFR 35-150 | 9-117 |
| AFR 35-16 | 9-117 |
| AFR 35-185 | 9-117 |
| AFR 35-2.5 | 9-117 |
| AFR 35-240 | 9-117 |
| AFR 35-25 | 9-117 |
| AFR 35-300 | 9-117 |
| AFR 35-35 | 9-117 |
| AFR 35-4 | 9-117 |
| AFR 35-400 | 9-117 |
| AFR 35-50 | 9-117 |
| AFR 35-6 | 9-117 |
| AFR 35-70 | 9-117 |
| AFR 35-95 | 9-117 |
| AMPLIMITE Rectangular Connectors | 2-3 |
| ARINC Connectors | 6-79 |
| ATUM Tubing | 3-11 |
| B-020-20-N | 8-56 |
| B-020-22-N | 8-56 |
| B-020-24-N | 8-56 |
| B-020-26-N | 8-56 |
| B-021-26-N | 8-56 |
| B02X/B04X | 8-55 |
| B-040-20-N | 8-56 |
| B-040-24-N | 8-56 |
| B-040-26-N | 8-56 |
| B-040-28-N | 8-56 |
| B-040-30-N | 8-56 |
| B-041-24-N | 8-56 |
| B-041-26-N | 8-56 |
| B-041-28-N | 8-56 |
| B-041-30-N | 8-56 |
| B-043-24-N | 8-56 |
| B-043-26-N | 8-56 |
| B-043-28-N | 8-56 |
| B-043-30-N | 8-56 |
| B-044-22-N | 8-56 |

| Product or Part Number | Page Number |
|---|---|
| B-044-24-N | 8-56 |
| B-044-26-N | 8-56 |
| B-046 | 8-57 |
| B-105-1802 | 8-33 |
| B-106-1401 | 8-33 |
| B-106-1402 | 8-33 |
| B-106-1403 | 8-33 |
| B-106-1501 | 8-33 |
| B-106-1502 | 8-33 |
| B-106-1503 | 8-33 |
| B-106-1601 | 8-33 |
| B-106-1602 | 8-33 |
| B-106-1801 | 8-33 |
| B-106-1803 | 8-33 |
| B-106-1991 | 8-33 |
| B-106-1992 | 8-33 |
| B-106-1993 | 8-33 |
| B-106-2401 | 8-32 |
| B-106-2402 | 8-32 |
| B-106-2403 | 8-32 |
| B-106-2502 | 8-32 |
| B-106-2503 | 8-32 |
| B-106-3281 | 8-34 |
| B-106-3481 | 8-34 |
| B-106-3631 | 8-34 |
| B-106-3632 | 8-34 |
| B-106-3633 | 8-34 |
| B-106-4631 | 8-34 |
| B-106-4632 | 8-34 |
| B-106-7401 | 8-35 |
| B-106-7502 | 8-35 |
| B-106-8401 | 8-35 |
| B-106-8502 | 8-35 |
| B-155 | 8-6, 8-48, 8-55 |
| B-155-03-35-22-5 | 8-49 |
| B-155-05-35-22-5 | 8-49 |
| B-155-06-35-22-5 | 8-49 |
| B-155-07-35-22-5 | 8-49 |
| B-155-09-35-22-5 | 8-49 |
| B-155-11 | 8-49 |
| B-155-11-35-22-5 | 8-49 |
| B-155-13 | 8-49 |
| B-155-13-35-22-5 | 8-49 |
| B-155-1501 | 8-44 |
| B-155-1502 | 8-44 |
| B-155-1503 | 8-44 |
| B-155-1504 | 8-44 |
| B-155-1505 | 8-44 |
| B-155-3, -5, -6, -7, -9 | 8-49 |
| B-155-3801 | 8-49 |
| B-155-3802 | 8-49 |
| B-155-9001 | 8-7, 8-11 |
| B-155-9002 | 8-7, 8-11 |
| B-155-9003 | 8-7, 8-11 |
| B-155-9004 | 8-7, 8-11 |
| B-155-9005 | 8-7, 8-11 |




Dimensions are shown for reference purposes only. Specifications subject to change.

Dimensions are in millimeters unless otherwise specified.

USA: +1 800 522 6752
Asia Pacific: +86 0 400 820 6015
UK: +44 800 267 666

For additional support numbers please visit www.te.com

## Part Index (Continued)


| Product or Part Number | Page Number |
|---|---|
| Band Straps | 9-93 |
| Bayonet Triaxial Connectors | 8-102 |
| BND-0812S | 6-27 |
| BND-1225S | 6-27 |
| BSTS Tubing | 3-13 |
| BSTS-03, -04, -07, -11, -13, -15, -17, -20, -27, -30, -35, -40, -45 | 3-14 |
| BSTS-FR Tubing | 3-13 |
| C-110 | 8-6 |
| C203 | 8-20 |
| C-203-01, -02, -03 | 8-20 |
| C66438-000 | 10-17 |
| C82893-000 | 10-6 |
| C99451-000 | 10-14 |
| CEC-RWC-18600 | 9-80 |
| CEC-RWC-18634 | 9-85 |
| CEC-RWC-18658 | 9-86 |
| CEC-RWC-18664 | 9-85 |
| CEC-RWC-18665 | 9-86 |
| CEC-RWC-18666 | 9-85 |
| CEC-RWC-18680 | 9-87 |
| CEC-RWC-18681 | 9-87 |
| CEC-RWC-18682 | 9-87 |
| CEC-RWC-18684 | 9-87 |
| CEC-RWC-18685 | 9-87 |
| CEC-RWC-18686 | 9-87 |
| CEC-RWC-18687 | 9-86 |
| CEC-RWC-18700 | 9-80 |
| CEC-RWC-18709 | 9-80 |
| CEC-RWC-18710 | 9-80 |
| CEC-RWC-18886 | 9-80 |
| CEC-RWC-18982 | 9-80 |
| CEC-RWC-18983 | 9-80 |
| CEC-RWC-19043 | 9-80 |
| CEC-RWC-19172 | 9-80 |
| CEC-RWC-20333 | 9-85 |
| CEC-RWC-20412 | 9-88 |
| CEC-RWC-20555 | 9-85 |
| CEC-RWC-20638 | 9-88 |
| CEC-RWC-20837 | 9-88 |
| CEC-RWC-21064 | 9-88 |
| CEC-RWC-21088 | 9-88 |
| CeeLok FAS-T Connector | 9-93 |
| CES, CES-1 | 4-89 |
| CES-1R | 4-92 |
| CES-2 | 4-89 |
| CES-2-A100 | 4-91 |
| CES-2-A50 | 4-91 |
| CES-2-A75 | 4-91 |
| CES-2A-D1 | 4-91 |
| CES-2A-F1, -F2 | 4-91 |
| CES-2A-T1, -T2, -T3 | 4-91 |
| CES-2-D1A | 4-89 |
| CES-2-F1A | 4-89 |
| CES-2F-A50 | 4-92 |
| CES-2F-A75 | 4-92 |

| Product or Part Number | Page Number |
|---|---|
| CES-2R | 4-92 |
| CES-2-T1 | 4-89 |
| CES-2-T1B | 4-89 |
| CES-3 | 4-89 |
| CES-3-A100 | 4-91 |
| CES-3-A150 | 4-91 |
| CES-3A-D1 | 4-91 |
| CES-3A-D2 | 4-91 |
| CES-3A-F1 | 4-91 |
| CES-3A-F2 | 4-91 |
| CES-3-D1 | 4-89 |
| CES-3-F1 | 4-89 |
| CES-3R | 4-92 |
| CES-3R-A100 | 4-92 |
| CES-3R-A150 | 4-92 |
| CES-3-T1 | 4-89 |
| CES-4 | 4-89 |
| CES-4-A150 | 4-91 |
| CES-4A-D3 | 4-91 |
| CES-4A-F3 | 4-91 |
| CES-4A-T3 | 4-91 |
| CES-4-D3 | 4-89 |
| CES-4-F1 | 4-89 |
| CES-4R | 4-92 |
| CES-4S | 4-89 |
| CES-4-T1 | 4-89 |
| CES-5 | 4-89 |
| CES-5-A250 | 4-91 |
| CES-5-F4 | 4-89 |
| CF0024-000 | 10-20 |
| CF0025-000 | 10-20 |
| CF0026-000 | 10-21 |
| CF0199-000 | 10-21 |
| CF0200-000 | 10-21 |
| CF0201-000 | 10-21 |
| CF5497-000 | 10-20 |
| CGPE-105 Tubing | 3-15 |
| CGPT Tubing | 3-17 |
| Cheminax Coaxial Cables | 9-73 to 9-76 |
| Cheminax Twin Axial Cable | 9-77 to 9-78 |
| CJ2085-000 | 10-14 |
| CJ2086-000 | 10-14 |
| CJ2087-000 | 10-14 |
| CL 105-10x0.5-PF | 9-39 |
| CL 105-10x0.75-PF | 9-39 |
| CL 105-10x1.0-PF | 9-39 |
| CL 105-10x1.5-PF | 9-39 |
| CL 105-10x2x0.5-PI | 9-41 |
| CL 105-10x2x0.5-PIO | 9-45 |
| CL 105-10x2x0.5-PO | 9-43 |
| CL 105-10x2x0.75-PI | 9-41 |
| CL 105-10x2x0.75-PIO | 9-45 |
| CL 105-10x2x0.75-PO | 9-43 |
| CL 105-10x2x1.0-PI | 9-41 |
| CL 105-10x2x1.0-PIO | 9-45 |
| CL 105-10x2x1.0-PO | 9-43 |

| Product or Part Number | Page Number |
|---|---|
| CL 105-10x2x1.5-PI | 9-41 |
| CL 105-10x2x1.5-PIO | 9-45 |
| CL 105-10x2x1.5-PO | 9-43 |
| CL 105-10x3x0.75-TF | 9-39 |
| CL 105-10x3x0.75-TI | 9-41 |
| CL 105-10x3x0.75-TIO | 9-45 |
| CL 105-10x3x0.75-TO | 9-43 |
| CL 105-12x0.5-SO | 9-37 |
| CL 105-12x0.5-SU | 9-35 |
| CL 105-12x0.75-SO | 9-37 |
| CL 105-12x0.75-SU | 9-35 |
| CL 105-12x1.0-SO | 9-37 |
| CL 105-12x1.0-SU | 9-35 |
| CL 105-12x1.5-SO | 9-37 |
| CL 105-12x1.5-SU | 9-35 |
| CL 105-12x2.5-SO | 9-37 |
| CL 105-12x2.5-SU | 9-35 |
| CL 105-14x0.5-PF | 9-39 |
| CL 105-14x0.75-PF | 9-39 |
| CL 105-14x1.0-PF | 9-39 |
| CL 105-14x1.5-PF | 9-39 |
| CL 105-14x1.5-SO | 9-37 |
| CL 105-14x1.5-SU | 9-35 |
| CL 105-14x2x0.5-PI | 9-41 |
| CL 105-14x2x0.5-PIO | 9-45 |
| CL 105-14x2x0.5-PO | 9-43 |
| CL 105-14x2x0.75-PI | 9-41 |
| CL 105-14x2x0.75-PIO | 9-45 |
| CL 105-14x2x0.75-PO | 9-43 |
| CL 105-14x2x1.0-PI | 9-41 |
| CL 105-14x2x1.0-PIO | 9-45 |
| CL 105-14x2x1.0-PO | 9-43 |
| CL 105-14x2x1.5-PI | 9-41 |
| CL 105-14x2x1.5-PIO | 9-45 |
| CL 105-14x2x1.5-PO | 9-43 |
| CL 105-15x3x0.75-TF | 9-39 |
| CL 105-15x3x0.75-TI | 9-41 |
| CL 105-15x3x0.75-TIO | 9-45 |
| CL 105-15x3x0.75-TO | 9-43 |
| CL 105-19x0.5-PF | 9-39 |
| CL 105-19x0.5-SO | 9-37 |
| CL 105-19x0.5-SU | 9-35 |
| CL 105-19x0.75-PF | 9-39 |
| CL 105-19x0.75-SO | 9-37 |
| CL 105-19x0.75-SU | 9-35 |
| CL 105-19x1.0-PF | 9-39 |
| CL 105-19x1.0-SO | 9-37 |
| CL 105-19x1.0-SU | 9-35 |
| CL 105-19x1.5-PF | 9-39 |
| CL 105-19x1.5-SO | 9-37 |
| CL 105-19x1.5-SU | 9-35 |
| CL 105-19x2.5-SO | 9-37 |
| CL 105-19x2.5-SU | 9-35 |
| CL 105-19x2x0.5-PI | 9-41 |
| CL 105-19x2x0.5-PIO | 9-45 |
| CL 105-19x2x0.5-PO | 9-43 |

## Part Index (Continued)


| Product or Part Number | Page Number |
|---|---|
| CL 105-19x2x0.75-PI | 9-41 |
| CL 105-19x2x0.75-PIO | 9-45 |
| CL 105-19x2x0.75-PO | 9-43 |
| CL 105-19x2x1.0-PI | 9-41 |
| CL 105-19x2x1.0-PIO | 9-45 |
| CL 105-19x2x1.0-PO | 9-43 |
| CL 105-19x2x1.5-PI | 9-41 |
| CL 105-19x2x1.5-PIO | 9-45 |
| CL 105-19x2x1.5-PO | 9-43 |
| CL 105-1x2x0.5-PI | 9-41 |
| CL 105-1x2x0.5-PIO | 9-45 |
| CL 105-1x2x0.5-PO | 9-43 |
| CL 105-1x2x0.75-PI | 9-41 |
| CL 105-1x2x0.75-PIO | 9-45 |
| CL 105-1x2x0.75-PO | 9-43 |
| CL 105-1x2x1.0-PI | 9-41 |
| CL 105-1x2x1.0-PIO | 9-45 |
| CL 105-1x2x1.0-PO | 9-43 |
| CL 105-1x2x1.5-PI | 9-41 |
| CL 105-1x2x1.5-PIO | 9-45 |
| CL 105-1x2x1.5-PO | 9-43 |
| CL 105-1x3x0.75-TI | 9-41 |
| CL 105-1x3x0.75-TIO | 9-45 |
| CL 105-1x3x0.75-TO | 9-43 |
| CL 105-1x3x1.5-TI | 9-41 |
| CL 105-1x3x1.5-TIO | 9-45 |
| CL 105-1x3x1.5-TO | 9-43 |
| CL 105-24x0.5-PF | 9-39 |
| CL 105-24x0.75-PF | 9-39 |
| CL 105-24x1.0-PF | 9-39 |
| CL 105-24x1.5-PF | 9-39 |
| CL 105-24x1.5-SO | 9-37 |
| CL 105-24x1.5-SU | 9-35 |
| CL 105-24x2x0.5-PI | 9-41 |
| CL 105-24x2x0.5-PIO | 9-45 |
| CL 105-24x2x0.5-PO | 9-43 |
| CL 105-24x2x0.75-PI | 9-41 |
| CL 105-24x2x0.75-PIO | 9-45 |
| CL 105-24x2x0.75-PO | 9-43 |
| CL 105-24x2x1.0-PI | 9-41 |
| CL 105-24x2x1.0-PIO | 9-45 |
| CL 105-24x2x1.0-PO | 9-43 |
| CL 105-24x2x1.5-PI | 9-41 |
| CL 105-24x2x1.5-PIO | 9-45 |
| CL 105-24x2x1.5-PO | 9-43 |
| CL 105-27x0.5-SO | 9-37 |
| CL 105-27x0.5-SU | 9-35 |
| CL 105-27x0.75-SO | 9-37 |
| CL 105-27x0.75-SU | 9-35 |
| CL 105-27x1.0-SO | 9-37 |
| CL 105-27x1.0-SU | 9-35 |
| CL 105-27x1.5-SO | 9-37 |
| CL 105-27x1.5-SU | 9-35 |
| CL 105-27x2.5-SO | 9-37 |
| CL 105-27x2.5-SU | 9-35 |
| CL 105-2Bx0.5-SO | 9-37 |
| CL 105-2Bx0.5-SU | 9-35 |
| CL 105-2Bx0.75-SO | 9-37 |
| CL 105-2Bx0.75-SU | 9-35 |
| CL 105-2Bx1.0-SO | 9-37 |
| CL 105-2Bx1.0-SU | 9-35 |
| CL 105-2Bx1.5-SO | 9-37 |
| CL 105-2Bx1.5-SU | 9-35 |
| CL 105-2Bx2.5-SO | 9-37 |
| CL 105-2Bx2.5-SU | 9-35 |
| CL 105-2x0.5-PF | 9-39 |
| CL 105-2x0.5-SO | 9-37 |
| CL 105-2x0.5-SU | 9-35 |
| CL 105-2x0.75-PF | 9-39 |
| CL 105-2x0.75-SO | 9-37 |
| CL 105-2x0.75-SU | 9-35 |
| CL 105-2x1.0-PF | 9-39 |
| CL 105-2x1.0-SO | 9-37 |
| CL 105-2x1.0-SU | 9-35 |
| CL 105-2x1.5-PF | 9-39 |
| CL 105-2x1.5-SO | 9-37 |
| CL 105-2x1.5-SU | 9-35 |
| CL 105-2x2.5-SO | 9-37 |
| CL 105-2x2.5-SU | 9-35 |
| CL 105-2x2x0.5-PI | 9-41 |
| CL 105-2x2x0.5-PIO | 9-45 |
| CL 105-2x2x0.5-PO | 9-43 |
| CL 105-2x2x0.75-PI | 9-41 |
| CL 105-2x2x0.75-PIO | 9-45 |
| CL 105-2x2x0.75-PO | 9-43 |
| CL 105-2x2x1.0-PI | 9-41 |
| CL 105-2x2x1.0-PIO | 9-45 |
| CL 105-2x2x1.0-PO | 9-43 |
| CL 105-2x2x1.5-PI | 9-41 |
| CL 105-2x2x1.5-PIO | 9-45 |
| CL 105-2x2x1.5-PO | 9-43 |
| CL 105-2x3x0.75-TF | 9-39 |
| CL 105-2x3x0.75-TI | 9-41 |
| CL 105-2x3x0.75-TIO | 9-45 |
| CL 105-2x3x0.75-TO | 9-43 |
| CL 105-2x3x1.5-TF | 9-39 |
| CL 105-2x3x1.5-TI | 9-41 |
| CL 105-2x3x1.5-TIO | 9-45 |
| CL 105-2x3x1.5-TO | 9-43 |
| CL 105-37x0.5-PF | 9-39 |
| CL 105-37x0.75-PF | 9-39 |
| CL 105-37x1.0-PF | 9-39 |
| CL 105-37x1.5-PF | 9-39 |
| CL 105-37x1.5-SO | 9-37 |
| CL 105-37x1.5-SU | 9-35 |
| CL 105-37x2.5-SO | 9-37 |
| CL 105-37x2.5-SU | 9-35 |
| CL 105-37x2x0.5-PI | 9-41 |
| CL 105-37x2x0.5-PIO | 9-45 |
| CL 105-37x2x0.5-PO | 9-43 |
| CL 105-37x2x0.75-PI | 9-41 |
| CL 105-37x2x0.75-PIO | 9-45 |
| CL 105-37x2x0.75-PO | 9-43 |
| CL 105-37x2x1.0-PI | 9-41 |
| CL 105-37x2x1.0-PIO | 9-45 |
| CL 105-37x2x1.0-PO | 9-43 |
| CL 105-37x2x1.5-PI | 9-41 |
| CL 105-37x2x1.5-PIO | 9-45 |
| CL 105-37x2x1.5-PO | 9-43 |
| CL 105-3Gx0.5-SO | 9-37 |
| CL 105-3Gx0.5-SU | 9-35 |
| CL 105-3Gx0.75-SO | 9-37 |
| CL 105-3Gx0.75-SU | 9-35 |
| CL 105-3Gx1.0-SO | 9-37 |
| CL 105-3Gx1.0-SU | 9-35 |
| CL 105-3Gx1.5-SO | 9-37 |
| CL 105-3Gx1.5-SU | 9-35 |
| CL 105-3Gx2.5-SO | 9-37 |
| CL 105-3Gx2.5-SU | 9-35 |
| CL 105-3x0.5-PF | 9-39 |
| CL 105-3x0.5-SO | 9-37 |
| CL 105-3x0.5-SU | 9-35 |
| CL 105-3x0.75-PF | 9-39 |
| CL 105-3x0.75-SO | 9-37 |
| CL 105-3x0.75-SU | 9-35 |
| CL 105-3x1.0-PF | 9-39 |
| CL 105-3x1.0-SO | 9-37 |
| CL 105-3x1.0-SU | 9-35 |
| CL 105-3x1.5-PF | 9-39 |
| CL 105-3x1.5-SO | 9-37 |
| CL 105-3x1.5-SU | 9-35 |
| CL 105-3x2.5-SO | 9-37 |
| CL 105-3x2.5-SU | 9-35 |
| CL 105-3x2x0.5-PI | 9-41 |
| CL 105-3x2x0.5-PIO | 9-45 |
| CL 105-3x2x0.5-PO | 9-43 |
| CL 105-3x2x0.75-PI | 9-41 |
| CL 105-3x2x0.75-PIO | 9-45 |
| CL 105-3x2x0.75-PO | 9-43 |
| CL 105-3x2x1.0-PI | 9-41 |
| CL 105-3x2x1.0-PIO | 9-45 |
| CL 105-3x2x1.0-PO | 9-43 |
| CL 105-3x2x1.5-PI | 9-41 |
| CL 105-3x2x1.5-PIO | 9-45 |
| CL 105-3x2x1.5-PO | 9-43 |
| CL 105-4x0.5-PF | 9-39 |
| CL 105-4x0.5-SO | 9-37 |
| CL 105-4x0.5-SU | 9-35 |
| CL 105-4x0.75-PF | 9-39 |
| CL 105-4x0.75-SO | 9-37 |
| CL 105-4x0.75-SU | 9-35 |
| CL 105-4x1.0-PF | 9-39 |
| CL 105-4x1.0-SO | 9-37 |
| CL 105-4x1.0-SU | 9-35 |
| CL 105-4x1.5-PF | 9-39 |
| CL 105-4x1.5-SO | 9-37 |
| CL 105-4x1.5-SU | 9-35 |
| CL 105-4x2.5-SO | 9-37 |

## Part Index (Continued)


| Product or Part Number | Page Number |
|---|---|
| CL 105-4x2.5-SU | 9-35 |
| CL 105-4x2x0.5-PI | 9-41 |
| CL 105-4x2x0.5-PIO | 9-45 |
| CL 105-4x2x0.5-PO | 9-43 |
| CL 105-4x2x0.75-PI | 9-41 |
| CL 105-4x2x0.75-PIO | 9-45 |
| CL 105-4x2x0.75-PO | 9-43 |
| CL 105-4x2x1.0-PI | 9-41 |
| CL 105-4x2x1.0-PIO | 9-45 |
| CL 105-4x2x1.0-PO | 9-43 |
| CL 105-4x2x1.5-PI | 9-41 |
| CL 105-4x2x1.5-PIO | 9-45 |
| CL 105-4x2x1.5-PO | 9-43 |
| CL 105-4x3x0.75-TF | 9-39 |
| CL 105-4x3x0.75-TI | 9-41 |
| CL 105-4x3x0.75-TIO | 9-45 |
| CL 105-4x3x0.75-TO | 9-43 |
| CL 105-4x3x1.5-TF | 9-39 |
| CL 105-4x3x1.5-TI | 9-41 |
| CL 105-4x3x1.5-TIO | 9-45 |
| CL 105-4x3x1.5-TO | 9-43 |
| CL 105-5Gx0.5-SO | 9-37 |
| CL 105-5Gx0.5-SU | 9-35 |
| CL 105-5Gx0.75-SO | 9-37 |
| CL 105-5Gx0.75-SU | 9-35 |
| CL 105-5Gx1.0-SO | 9-37 |
| CL 105-5Gx1.0-SU | 9-35 |
| CL 105-5Gx1.5-SO | 9-37 |
| CL 105-5Gx1.5-SU | 9-35 |
| CL 105-5Gx2.5-SO | 9-37 |
| CL 105-5Gx2.5-SU | 9-35 |
| CL 105-5x0.5-SO | 9-37 |
| CL 105-5x0.5-SU | 9-35 |
| CL 105-5x0.75-SO | 9-37 |
| CL 105-5x0.75-SU | 9-35 |
| CL 105-5x1.0-SO | 9-37 |
| CL 105-5x1.0-SU | 9-35 |
| CL 105-5x1.5-SO | 9-37 |
| CL 105-5x1.5-SU | 9-35 |
| CL 105-5x2.5-SO | 9-37 |
| CL 105-5x2.5-SU | 9-35 |
| CL 105-7x0.5-PF | 9-39 |
| CL 105-7x0.5-SO | 9-37 |
| CL 105-7x0.5-SU | 9-35 |
| CL 105-7x0.75-PF | 9-39 |
| CL 105-7x0.75-SO | 9-37 |
| CL 105-7x0.75-SU | 9-35 |
| CL 105-7x1.0-PF | 9-39 |
| CL 105-7x1.0-SO | 9-37 |
| CL 105-7x1.0-SU | 9-35 |
| CL 105-7x1.5-PF | 9-39 |
| CL 105-7x1.5-SO | 9-37 |
| CL 105-7x1.5-SU | 9-35 |
| CL 105-7x2.5-SO | 9-37 |
| CL 105-7x2.5-SU | 9-35 |
| CL 105-7x2x0.5-PI | 9-41 |

| Product or Part Number | Page Number |
|---|---|
| CL 105-7x2x0.5-PIO | 9-45 |
| CL 105-7x2x0.5-PO | 9-43 |
| CL 105-7x2x0.75-PI | 9-41 |
| CL 105-7x2x0.75-PIO | 9-45 |
| CL 105-7x2x0.75-PO | 9-43 |
| CL 105-7x2x1.0-PI | 9-41 |
| CL 105-7x2x1.0-PIO | 9-45 |
| CL 105-7x2x1.0-PO | 9-43 |
| CL 105-7x2x1.5-PI | 9-41 |
| CL 105-7x2x1.5-PIO | 9-45 |
| CL 105-7x2x1.5-PO | 9-43 |
| CL 105-7x3x0.75-TF | 9-39 |
| CL 105-7x3x0.75-TI | 9-41 |
| CL 105-7x3x0.75-TIO | 9-45 |
| CL 105-7x3x0.75-TO | 9-43 |
| CL 105-7x3x1.5-TF | 9-39 |
| CL 105-7x3x1.5-TI | 9-41 |
| CL 105-7x3x1.5-TIO | 9-45 |
| CL 105-7x3x1.5-TO | 9-43 |
| CL-105-* | 9-49 |
| C-Lite Cables | 9-33 to 9-49 |
| C-Lite CL 105-PF/C-Lite CL 105-TF | 9-38 to 9-39 |
| C-Lite CL 105-PI/C-Lite CL 105-TI | 9-40 to 9-41 |
| C-Lite CL 105-PIO/C-Lite CL105-TIO | 9-44 to 9-45 |
| C-Lite CL 105-PO/C-Lite CL 105-TO | 9-42 to 9-43 |
| C-Lite CL 105-SO | 9-36 to 9-37 |
| C-Lite CL 105-SU | 9-34 to 9-35 |
| C-Lite F Cables | 9-50 to 9-51 |
| Code 18 MIL-C-5015 | 6-28 to 6-36 |
| Code 21 MIL-C-26482 | 6-37 to 6-43 |
| Code 32 MIL-C-22992 | 6-44 to 6-49 |
| Code 40 MIL-C-38999 | 6-50 to 6-57 |
| Code 41 MIL-C-38999 | 6-58 to 6-65 |
| Code 54 MIL-C-5015 | 6-66 to 6-73 |
| Code 76 BS 9522 | 6-74 to 6-76 |
| Cold Applied Splices | 8-22 |
| Computer Aided Design | 9-93 |
| CRES-Lock Bands | 6-27 |
| CRN Tubing | 3-19 |
| CTC-0012 | 9-64 |
| CTC-0015 | 9-64 |
| CTC-0018 | 9-64 |
| CTC-0044 | 9-64 |
| CTC-0057 | 9-64 |
| CTC-0073 | 9-64 |
| CTC-0074 | 9-64 |
| CTC-0077 | 9-64 |
| CTC-0078 | 9-64 |
| CTC-0079 | 9-64 |
| CTC-0080 | 9-64 |
| CTC-0081 | 9-64 |
| Custom Maintenance & Repair Kits | 7-12 |
| Custom Shipboard Cables | 9-94 |
| CV-1981 Heavy Duty Hot-Air Tool | 10-11,10-12 |
| CV-1983 Heavy Duty Hot-Air Tool | 5-5, 10-11,10-12 |
| CWT | 8-6, 8-48, 8-55 |

| Product or Part Number | Page Number |
|---|---|
| D-062—0169/0170-X | 8-78 |
| D-100-00, -31 | 8-53 |
| D-101-00 | 8-53 |
| D-103-00, -31 | 8-53 |
| D-104-31 | 8-53 |
| D-105-31 | 8-53 |
| D-107-31 | 8-53 |
| D-110 | 8-6 |
| D-110-0062 | 8-45 |
| D-110-0071 | 8-8 |
| D-110-0083 | 8-8 |
| D-110-0083 | 8-11 |
| D-110-0090 | 8-8, 8-11 |
| D-110-0101 | 8-8, 8-11 |
| D-110-0181 | 8-8, 8-11 |
| D-110-0213 | 8-8 |
| D-110-0217 | 8-8, 8-45 |
| D-110-35 | 8-8, 8-11 |
| D-110-40 | 8-8 |
| D-110-41 | 8-8, 8-11 |
| D-128-0043 | 8-45 |
| D-129-03, -05, -07, -13, -22, -30, -31, -56 | 8-45 |
| D-142-50, -51, -52, -56, -65, -83 | 8-53 |
| D14-30FR | 4-107 |
| D-144-00, -01, -02, -03, -04, -05 | 8-53 |
| D-144-25, -26, -37, -46 | 8-53 |
| D-150 | 8-66 |
| D-150-0168, -0169, -0170, -0174, -0715, -0176, -0177, -0178, -0179, -0180, -0181 | 8-67 |
| D-150-0708-5 | 8-96 |
| D-150-9708-5 | 8-102, 8-104 |
| D150-C-11 | 8-71 |
| D150-C-12 | 8-71 |
| D150-C-13 | 8-71 |
| D150-C-14 | 8-71 |
| D-1744 | 8-6 |
| D-1744-01, 01, -02, -03, -04 | 8-9, 8-11, 8-53 |
| D-1744-05, -06, -07, -08 | 8-53 |
| D-181 | 8-55 |
| D-181-1220-90/9 | 8-56 |
| D-181-1222-90/9 | 8-56 |
| D-181-1224-90/9 | 8-56 |
| D-181-1226-90/9 | 8-56 |
| D-181-1826-6/9 | 8-56 |
| D-181-1830-6/9 | 8-56 |
| D-181-2220-90/9 | 8-56 |
| D-181-2222-90/9 | 8-56 |
| D-181-2224-90/9 | 8-56 |
| D-181-2226-90/9 | 8-56 |
| D-181-2826-6/9 | 8-56 |
| D-181-2830-6/9 | 8-56 |
| D-181-3220-90/9 | 8-56 |
| D-181-3222-90/9 | 8-56 |
| D-181-3224-90/9 | 8-56 |
| D-181-3226-90/9 | 8-56 |






Catalog 1654025
Revised 3-13

www.te.com

Dimensions are shown for reference purposes only. Specifications subject to change.

Dimensions are in millimeters unless otherwise specified.

USA: +1 800 522 6752
Asia Pacific: +86 0 400 820 6015
UK: +44 800 267 666

For additional support numbers please visit www.te.com

## Part Index (Continued)


| Product or Part Number | Page Number |
|---|---|
| D-181-3826-6/9 | 8-56 |
| D-181-3830-6/9 | 8-56 |
| D-184 | 8-55 |
| D-184-1220-90/9 | 8-56 |
| D-184-1222-90/9 | 8-56 |
| D-184-1224-90/9 | 8-56 |
| D-184-1226-90/9 | 8-56 |
| D-184-2220-90/9 | 8-56 |
| D-184-2222-90/9 | 8-56 |
| D-184-2224-90/9 | 8-56 |
| D-184-2226-90/9 | 8-56 |
| D200-400-FR | 4-107 |
| D-200-82, -83, -84 | 8-26, 8-29 |
| D3-9FR | 4-107 |
| D-406 | 8-18 |
| D-406-0001, -0002, -0003 | 8-18 |
| D-406-0034 | 8-18 |
| D-436-0096 | 8-26 |
| D-436-0097 | 8-26 |
| D-436-0098 | 8-26 |
| D-436-0110 | 8-26 |
| D-436-0115 | 8-26 |
| D-436-0128 | 8-25 |
| D-436-36, -37, -38 | 8-22, 8-26 |
| D-436-42, -43, -52, -53, -58, -59, -60, -61, -82, -83, -84, -85, -86, -87, 88, -89, -90 | 8-26 |
| D-500-0255 | 8-91 |
| D-500-0255-511-1 | 8-92 |
| D-500-0255-512-1 | 8-92 |
| D-500-0255-513-1 & -2 | 8-92 |
| D-500-0255-515-1 & -2 | 8-92 |
| D-500-0255-517-1 & -2 | 8-92 |
| D-500-0255-521-1 | 8-92 |
| D-500-0255-522-1 | 8-92 |
| D-500-0255-523-1 & -2 | 8-92 |
| D-500-0255-525-1 & -2 | 8-92 |
| D-500-0255-527-1 & -2 | 8-92 |
| D-500-0255-531-1 & -2 | 8-92 |
| D-500-0255-533-1 & -2 | 8-92 |
| D-500-0255-535-1 & -2 | 8-92 |
| D-500-0255-537-1 & -2 | 8-92 |
| D-500-0255-541-1 | 8-92 |
| D-500-0255-542-1 | 8-92 |
| D-500-0255-543-1 & -2 | 8-92 |
| D-500-0255-545-1 & -2 | 8-92 |
| D-500-0255-551-1 | 8-92 |
| D-500-0255-552-1 | 8-92 |
| D-500-0255-553-1 & -2 | 8-92 |
| D-500-0255-555-1 & -2 | 8-92 |
| D-500-0255-557-1 & -2 | 8-92 |
| D-500-0255-561-1 | 8-92 |
| D-500-0255-562-1 | 8-92 |
| D-500-0255-563-1 & -2 | 8-92 |
| D-500-0255-565-1 & -2 | 8-92 |
| D-500-0255-567-1 & -2 | 8-92 |
| D-500-0255-571-1 | 8-92 |
| D-500-0255-572-1 | 8-92 |
| D-500-0255-573-1 & -2 | 8-92 |
| D-500-0255-575-1 & -2 | 8-92 |
| D-500-0255-577-1 & -2 | 8-92 |
| D-500-0255-581-1 | 8-92 |
| D-500-0255-582-1 | 8-92 |
| D-500-0255-583-1 & -2 | 8-92 |
| D-500-0255-585-1 | 8-92 |
| D-500-0255-587-1 & -2 | 8-92 |
| D-500-04 | 8-85 |
| D-500-0455-1, -2 | 8-105 |
| D-500-0455-1-YYY-ZZZ | 8-86 |
| D-500-0455-2-YYY-ZZZ | 8-86 |
| D-500-0456-1-YYY-ZZZ | 8-86 |
| D-500-0456-2-YYY-ZZZ | 8-86 |
| D-500-0457-1 | 8-105 |
| D-500-0457-1-YYY-ZZZ | 8-86 |
| D-500-0457-2-YYY-ZZZ | 8-86 |
| D-500-0458-1-YYY-ZZZ | 8-86 |
| D-500-0458-2-YYY-ZZZ | 8-86 |
| D-500-0463-612 | 8-96 |
| D-500-0463-613, -614 | 8-96 |
| D-500-0465-1-YYY-ZZZ | 8-86 |
| D-500-0465-2-YYY-ZZZ | 8-86 |
| D-500-0466-1-YYY-ZZZ | 8-86 |
| D-500-0466-2-YYY-ZZZ | 8-86 |
| D-500-0467-1-YYY-ZZZ | 8-86 |
| D-500-0467-2-YYY-ZZZ | 8-86 |
| D-500-0468-1-YYY-ZZZ | 8-86 |
| D-500-0468-2-YYY-ZZZ | 8-86 |
| D-500-94-* | 8-102, 8-103 |
| D-500-9463-* | 8-102, 8-104 |
| D-500-L455-X-YYY-ZZZ | 8-90 |
| D-500-L456-X-YYY-ZZZ | 8-90 |
| D-500-L457-X-YYY-ZZZ | 8-90 |
| D-500-L458-X-YYY-ZZZ | 8-90 |
| D-500-L4xx | 8-88 |
| D50-100 FR | 4-107 |
| D-600-0065, -068 | 8-96 |
| D-600-0071 | 8-81 |
| D-600-0083 | 8-96 |
| D-600-0116 | 8-81 |
| D-600-0125 | 8-81 |
| D-600-9463-* | 8-102 |
| D-602 | 8-73 |
| D-602-0093, -0094 | 8-80 |
| D-602-0095, 0104, 0105 | 8-80 |
| D-602-0106, 0107 | 8-80 |
| D-602-0122, -0123 | 8-77 |
| D-602-0126, -0127 | 8-75 |
| D-602-0140 | 8-77, 8-78 |
| D-602-0141 | 8-77 |
| D-602-0142 | 8-77, 8-78 |
| D-602-0143,-0144, -0145, -0146, -0147, -0150, -0151 | 8-77 |
| D-602-0156/0157-X | 8-78 |
| D-602-0171 | 8-78 |
| D-602-0172, -0173, -0174 | 8-75 |
| D-602-0185, -0186, -0187, -0189 | 8-80 |
| D-602-0278, -0279, -0288, -0289 | 8-79 |
| D-602-1108, -1109, -1110, -1111, -1112, -1113 | 8-77 |
| D-602-16, -17 | 8-74 |
| D-602-44, -45 | 8-75 |
| D-602-46, -47 | 8-74 |
| D-602-54, -55 | 8-75 |
| D-602-56, -57 | 8-74 |
| D-602-72, -73, -76, -77 | 8-75 |
| D-607 | 8-57 |
| D-609-03, -04, -05, -06, -07, -08, -09, -10, -11, -12, -13, -14 | 8-26 |
| D-610-09, -10 | 8-75 |
| D-621-0406 | 8-96, 8-97 |
| D-621-0406-L | 8-98 |
| D-621-0407 | 8-96, 8-97 |
| D-621-0407-L | 8-98 |
| D-621-0413 | 8-96, 8-97 |
| D-621-0413-L | 8-98 |
| D-621-0415 | 8-96 to 8-98 |
| D-621-0415-L | 8-98 |
| D-621-0417 | 8-96, 8-97 |
| D-621-0417-L | 8-98 |
| D-621-0418 | 8-94, 8-97 |
| D-621-0418-L | 8-98 |
| D-621-0423 | 8-96, 8-97 |
| D-621-0423-L | 8-98 |
| D-621-0424 | 8-96, 8-97 |
| D-621-0424-L | 8-98 |
| D-621-0453 | 8-96, 8-97 |
| D-621-0453-L | 8-98 |
| D-621-0454 | 8-96, 8-97 |
| D-621-0454-L | 8-98 |
| D-621-0455 | 8-96, 8-97 |
| D-621-0455-L | 8-98 |
| D-621-0456 | 8-96, 8-97 |
| D-621-0456-L | 8-98 |
| D-621-0457 | 8-96, 8-97 |
| D-621-0457-L | 8-98 |
| D-621-0458 | 8-96, 8-97 |
| D-621-0458-L | 8-98 |
| D-621-0459 | 8-96, 8-97 |
| D-621-0459-L | 8-98 |
| D-621-0460 | 8-96 |
| D-621-0460-L | 8-98 |
| D-621-0461 | 8-96, 8-97 |
| D-621-0461-L | 8-98 |
| D-621-0462 | 8-96, 8-97 |
| D-621-0462-L | 8-98 |
| D-621-0463 | 8-96, 8-97 |
| D-621-0463-L | 8-98 |
| D-621-0464 | 8-96, 8-97 |
| D-621-0464-L | 8-98 |
| D-621-0465 | 8-96, 8-97 |

## Part Index (Continued)


| Product or Part Number | Page Number |
|---|---|
| D-621-0465-L | 8-98 |
| D-621-0466 | 8-96, 8-97 |
| D-621-0467 | 8-96, 8-97 |
| D-621-0467-L | 8-98 |
| D-621-0468 | 8-96, 8-97 |
| D-621-0468-L | 8-98 |
| D-621-0469 | 8-96, 8-97 |
| D-621-0469-L | 8-105 |
| D-621-0470 | 8-96, 8-97 |
| D-621-0470-L | 8-98 |
| D-621-0471 | 8-96, 8-97 |
| D-621-0471-L | 8-98 |
| D-621-0472 | 8-96, 8-97 |
| D-621-0472-L | 8-98 |
| D-621-0473 | 8-96, 8-97 |
| D-621-0473-L | 8-98 |
| D-621-0474 | 8-96, 8-97 |
| D-621-0475 | 8-96, 8-97 |
| D-621-0475-L | 8-98 |
| D-621-0476 | 8-96, 8-97 |
| D-621-0476-L | 8-98 |
| D-621-0477 | 8-96, 8-97 |
| D-621-0477-L | 8-98 |
| D-621-0478 | 8-96, 8-97 |
| D-621-0478-L | 8-98 |
| D-621-0479 | 8-96, 8-97 |
| D-621-0479-L | 8-98 |
| D-621-0480 | 8-96, 8-97 |
| D-621-0480-L | 8-98 |
| D-621-0481 | 8-96, 8-97 |
| D-621-0481-L | 8-98 |
| D-621-0482 | 8-96, 8-97 |
| D-621-0483 | 8-96, 8-97 |
| D-621-0483-L | 8-98 |
| D-621-0484 | 8-96, 8-97 |
| D-621-0484-L | 8-98 |
| D-621-E03K-P | 8-99 |
| D-621-E03K-S | 8-99 |
| D-621-E077-P | 8-99 |
| D-621-E077-S | 8-99 |
| D-621-F077-P | 8-99 |
| D-621-F077-S | 8-99 |
| D-711-00, -04, -07, -08 | 8-45 |
| D-713-03 | 8-45 |
| D-714-00, -01 | 8-45 |
| Data Bus (MIL-STD-1553B) Components | 8-82 to 8-105 |
| Data Bus Accessories | 8-95 to 8-99 |
| Data Bus Box Couplers | 8-91 to 8-92 |
| Data Bus Cables | 8-83 |
| Data Bus Discrete Connectors | 8-93 to 8-94 |
| Data Bus In-Line Microcouplers | 8-85 to 8-87 |
| Data Bus Ultra Lightweight In-Line Microcouplers | 8-88 to 8-90 |
| DCPT Tubing | 3-21 |
| Demateable Terminators | 8-102 |
| Digital Video Interface (DVI) | 9-92 |

| Product or Part Number | Page Number |
|---|---|
| DK-3716-E#01-TP, TS | 8-99 |
| DK-3716-E#02-TP, TS | 8-99 |
| DK-3716-E#12K-TP, TS | 8-99 |
| DK-3716-E03K-P, S | 8-99 |
| DK-3716-E102-TP, TS | 8-99 |
| DK-3716-E112-TP, TS | 8-99 |
| DK-3716-E202-TP, TS | 8-99 |
| DK-3716-E212-TP, TS | 8-99 |
| DK-3716-F077-P, S | 8-99 |
| DK-3716-F101-TP, TS | 8-99 |
| DK-3716-F201-TP, TS | 8-99 |
| DK-602-0156-N-1 | 8-77, 8-100 |
| DK-602-0156-N-2 | 8-77, 8-100, 8-105 |
| DK-602-0156-N-3 | 8-78, 8-100 |
| DK-602-0157-N-1 | 8-78, 8-100 |
| DK-602-0157-N-2 | 8-78, 8-100, 8-105 |
| DK-602-0157-N-3 | 8-78, 8-100 |
| DK-602-0169-1 | 8-78 |
| DK-602-0170-1 | 8-78 |
| DK-602-0186-2 | 8-80 |
| DK-602-0187-2 | 8-80 |
| DK-621 | 8-83, 8-98, 8-104 |
| DK-621-0411-P | 8-97, 8-98, 8-105 |
| DK-621-0411-S | 8-97, 8-98 |
| DK-621-0412-P | 8-97, 8-98, 8-105 |
| DK-621-0412-S | 8-97, 8-98 |
| DK-621-0433-1P | 8-97, 8-98 |
| DK-621-0433-1S | 8-97, 8-98 |
| DK-621-0434-1P | 8-97, 8-98, 8-105 |
| DK-621-0434-1S | 8-97, 8-98 |
| DK-621-0435-2P | 8-97, 8-98 |
| DK-621-0435-2S | 8-97, 8-98 |
| DK-621-0436-2P | 8-97, 8-98 |
| DK-621-0436-2S | 8-97, 8-98 |
| DK-621-0437-3P | 8-97, 8-98 |
| DK-621-0437-3S | 8-97, 8-98 |
| DK-621-0438-3P | 8-97, 8-98 |
| DK-621-0438-3S | 8-97, 8-98 |
| DK-621-0439-4P | 8-97, 8-98 |
| DK-621-0439-4S | 8-97, 8-98 |
| DK-621-0440-4P | 8-97, 8-98 |
| DK-621-0440-4S | 8-97, 8-98 |
| DK-621-0446-3P | 8-98 |
| DK-621-0446-3S | 8-98 |
| DK-621-0448-2P | 8-98 |
| DK-621-0448-2S | 8-98 |
| DK-621-0512-P | 8-97 |
| DK-621-0512-S | 8-97 |
| DK-621-0546-3P | 8-97 |
| DK-621-0546-3S | 8-97 |
| DK-621-0548-2P | 8-97 |
| DK-621-0548-2S | 8-97 |
| DK-621-0550-1P | 8-97, 8-98 |
| DK-621-0550-1S | 8-97, 8-98 |
| DK-621-0551-4P | 8-97, 8-98 |
| DK-621-0551-4S | 8-97, 8-98 |

| Product or Part Number | Page Number |
|---|---|
| DK-621-09* | 8-103 |
| DK-621-0911P | 8-102 |
| DK-621-0911S | 8-102 |
| DK-621-0912P | 8-102 |
| DK-621-0912S | 8-102 |
| DK-621-0933 | 8-102 |
| DK-621-0933-1P or S | 8-102 |
| DK-621-0934 | 8-102 |
| DK-621-0934-1P or S | 8-102 |
| DK-621-0935 | 8-102 |
| DK-621-0935-2P or S | 8-102 |
| DK-621-0936 | 8-102 |
| DK-621-0936-2P or S | 8-102 |
| DK-621-0937 | 8-102 |
| DK-621-0937-3P or S | 8-102 |
| DK-621-0938 | 8-102 |
| DK-621-0938-3P or S | 8-102 |
| DK-621-0939 | 8-102 |
| DK-621-0939-4P or S | 8-100 |
| DK-621-0940 | 8-102 |
| DK-621-0940-4P or S | 8-102 |
| DK-621-E102-TP | 8-99 |
| DK-621-E102-TS | 8-99 |
| DK-621-E202-TP | 8-99 |
| DK-621-E202-TS | 8-99 |
| DK-621-F101-TP | 8-99 |
| DK-621-F101-TS | 8-99 |
| DK-621-F201-TS | 8-99 |
| DR-25 Tubing | 3-23 |
| DR-25-TW | 3-25 |
| D-SCE Identification Sleeves | 2-3 |
| DuraSeal Crimp Splices | 8-18 to 8-19 |
| DuraSeal Insulated Crimp Terminals | 8-31 to 8-36 |
| DWP-125 Tubing | 3-27 |
| E63259-000 | 10-6 |
| E95798-000 | 10-12 |
| Electrical Shielding | 9-113 to 9-114 |
| Electroloss FilterLine | 9-67 to 9-72 |
| EN4165 | 9-93 |
| ES Cap-no. 1, 2, 3 | 3-34 |
| ES Caps | 3-33 |
| ES1000 Tubing | 3-29 |
| ES1000-no. 1, 2, 3, 4 | 3-30 |
| ES2000 Tubing | 3-31 |
| ES2000-no. 1, 2, 3, 4 | 3-32 |
| Ethernet Category Cables | 9-92 |
| F11734-000 | 10-14 |
| F150-400 FR | 4-107 |
| F-23 FR | 4-107 |
| F25836-000 | 10-12 |
| F30529-000 | 10-14 |
| F3-9 FR | 4-107 |
| F42-60 FR | 4-107 |
| F52511-000 | 10-20 |
| F66989-000 | 10-6 |






Catalog 1654025
Revised 3-13

www.te.com

Dimensions are shown for reference purposes only. Specifications subject to change.

Dimensions are in millimeters unless otherwise specified.

USA: +1 800 522 6752
Asia Pacific: +86 0 400 820 6015
UK: +44 800 267 666

For additional support numbers please visit www.te.com

## Part Index (Continued)


| Product or Part Number | Page Number |
|---|---|
| F75-100 FR | 4-107 |
| F83221-000 | 10-16 |
| FDR-25 | 9-93 |
| FDR25 Cable Jacket Material | 9-103 to 9-104 |
| Fiber Channel | 9-92 |
| FireWire/IEEE 1394 | 9-92 |
| FL2500 Tubing | 3-35 |
| FL2500-no. 1, 2, 3, 4 | 3-36 |
| FLCW0211 | 9-52 |
| FLCW0211-0.35-* | 9-55 |
| FLCW0211-0.50-* | 9-55 |
| FLCW0211-0.75-* | 9-55 |
| FLCW0211-1.00-* | 9-55 |
| FLCW0211-1.50-* | 9-55 |
| FLCW0211-2.50-* | 9-55 |
| FLCW0219 | 9-52 |
| FLCW0219-0.35-* | 9-55 |
| FLCW0219-0.50-* | 9-55 |
| FLCW0219-0.75-* | 9-55 |
| FLCW0219-1.00-* | 9-55 |
| FLCW0219-1.50-* | 9-55 |
| FLCW0219-2.50-* | 9-55 |
| FLDWC0311-0.25* | 9-57 |
| FLDWC0311-0.35* | 9-57 |
| FLDWC0311-0.50* | 9-57 |
| FLDWC0311-0.75* | 9-57 |
| FLDWC0311-1.00* | 9-57 |
| FLDWC0311-1.50* | 9-57 |
| FLDWC0311-14-* | 9-57 |
| FLDWC0311-16-* | 9-57 |
| FLDWC0311-18-* | 9-57 |
| FLDWC0311-2.00* | 9-57 |
| FLDWC0311-2.50* | 9-57 |
| FLDWC0311-20-* | 9-57 |
| FLDWC0311-22-* | 9-57 |
| FLDWC0311-24-* | 9-57 |
| FLDWC0311-26-* | 9-57 |
| FLDWX031X | 9-52 |
| FlexLine (SPEC 80) Wire | 9-21 to 9-22 |
| FlexLite Commercial Wire | 9-52 to 9-53 |
| FlexLite CW Wire | 9-54 to 9-55 |
| FlexLite DW Wire | 9-56 |
| FlexLite HT Wire | 9-60 to 9-61 |
| FlexLite TW Wire | 9-58 to 9-59 |
| FLHTC0311-0.25-* | 9-61 |
| FLHTC0311-0.35-* | 9-61 |
| FLHTC0311-0.50-* | 9-61 |
| FLHTC0311-0.75-* | 9-61 |
| FLHTC0311-1.00-* | 9-61 |
| FLHTC0311-1.50-* | 9-61 |
| FLHTC0311-10* | 9-61 |
| FLHTC0311-12* | 9-61 |
| FLHTC0311-14* | 9-61 |
| FLHTC0311-16* | 9-61 |
| FLHTC0311-18* | 9-61 |
| FLHTC0311-2.00-* | 9-61 |

| Product or Part Number | Page Number |
|---|---|
| FLHTC0311-2.50-* | 9-61 |
| FLHTC0311-20* | 9-61 |
| FLHTC0311-22* | 9-61 |
| FLHTC0311-24* | 9-61 |
| FLHTC0311-26* | 9-61 |
| FLHTX031X | 9-52 |
| FLS40 | 6-78 |
| FLS41 | 6-78 |
| FLS54 | 6-78 |
| FLTWC0311-10* | 9-59 |
| FLTWC0311-12* | 9-59 |
| FLTWC0311-14* | 9-59 |
| FLTWC0311-16* | 9-59 |
| FLTWC0311-18* | 9-59 |
| FLTWC0311-20* | 9-59 |
| FLTWC0311-22* | 9-59 |
| FLTWC0311-24* | 9-59 |
| FLTWC0311-26* | 9-59 |
| FLTWX031X | 9-52 |
| FLTXX031X | 9-52 |
| FLX40 | 8-108 |
| FTR 16-10 | 9-117 |
| FTR 16-16 | 9-117 |
| FTR 16-2.5 | 9-117 |
| FTR 16-25 | 9-117 |
| FTR 16-35 | 9-117 |
| FTR 16-4 | 9-117 |
| FTR 16-50 | 9-117 |
| FTR 16-6 | 9-117 |
| FTR 16-70 | 9-117 |
| FTR 16-95 | 9-117 |
| Gigabit Ethernet Connectors | 9-93 |
| GPR Rectangular Connectors | 2-3 |
| HarnVis™ 3D System | 2-6 |
| HarnWare™ V6 | 2-2 to 2-7 |
| HCTE Tubing | 3-37 |
| HET-A-02X | 6-82 |
| HET-A-03X | 6-82 |
| HET-A-04* | 6-82 |
| HEX-* | 6-81 |
| HEX07-A* | 6-82 |
| HEXA6-* | 6-82 |
| HexaShield EMC/EMI Adapters | 6-79 to 6-84 |
| HEXDB-AC-* | 6-82 |
| HF Tubing | 3-39 |
| HF04, 07, 11, 13, 15, 17, 20, 27 | 3-40 |
| HFT5000 Tubing | 3-41 |
| High Speed Copper Cables | 9-89 |
| High Temperature Sealing Sleeves | 3-90 |
| HL 2010E Hot Air Heating Tool | 10-13, 10-14 |
| HL1910E Hot Air Heating Tool | 10-13, 10-14 |
| HR**060, 125, 175, 200, 250, 300, 400 | 3-44 |
| HRHF Tubing | 3-43 |
| HRHT Tubing | 3-45 |
| HRHT-1/X, 2/X, 3/X, 4/X, 5/X | 3-46 |
| HRNF Tubing | 3-43 |

| Product or Part Number | Page Number |
|---|---|
| HRSR Tubing | 3-43 |
| HTAT Tubing | 3-47 |
| In-Line Couplers and Terminators | 8-100 |
| Integrated Military Harnessess | 2-8 to 2-18 |
| IR 1894 Shuttle Machine | 10-15, 10-16 |
| IR-1759 MiniRay Heating Tool | 10-18 to10-21 |
| IR-1759-MK4-AT3130-EDCONT | 10-19 |
| IR-550 Mark II Heating Tool | 10-17 |
| KTKK Assemblies | 7-2 |
| Laser Markable FEP | 9-93 |
| Leister CV-198X | 8-70 |
| LNCL-11-125 | 4-112 |
| LNCL-11-205 | 4-112 |
| LNCL-12-140 | 4-112 |
| LNCL-12-240 | 4-112 |
| LNCL-13-155 | 4-112 |
| LNCL-13-305 | 4-112 |
| LNCL-14-185 | 4-112 |
| LNCL-14-355 | 4-112 |
| LNCL-15-185 | 4-112 |
| LNCL-15-260 | 4-112 |
| LNCL-15-450 | 4-112 |
| Low Fluoride XL-ETFE | 9-93 |
| M27500-* | 9-7, 9-20 |
| M81969/8-08 | 8-70 |
| M81969/8-10 | 8-70 |
| Maulflex Conduit System | 3-49 |
| MHCS | 7-15, 7-16 |
| MHCT | 7-15, 7-16 |
| MHHS | 7-15, 7-16 |
| MHHT | 7-15, 7-16 |
| Micro Heat Shrink Moulded Parts | 2-3 |
| Micro Molded Shapes | 4-83 to 4-87 |
| MIL-C-5015 Connectors | 9-81 |
| MIL-C-83723 Connectors | 9-81 |
| MIL-C-389999 Connectors | 8-99 |
| MiniSeal Crimp Splices | 8-22 to 8-25 |
| Model 105 Tunnel Oven | 10-28, 10-29 |
| Model 16B Belt Heater | 10-22, 10-23 |
| Model 19 Conveyor Heater | 10-24, 10-25 |
| Model 81CE Discrete Heater | 10-26, 10-27 |
| Modified FEP | 9-93 |
| Molded Shapes | 9-93 |
| Multiconductor (Multicore) Cables | 9-94 to 9-96 |
| NBC Cable Jacket Material | 9-111 |
| NT Tubing | 3-51 |
| NTFR Tubing | 3-55 |
| NT-MIL Tubing | 3-53 |
| PD Caps | 3-57 |
| PolyCrimp Crimp Splices | 8-20 to 8-21 |
| Power Cables | 9-115 to 9-118 |
| Properties and Specifications | 9-111 to 9-112 |
| PTCM Tubing | 3-59 |
| QFT, QFT1, QFT2, QFT3 | 4-104 |
| QUADLITE Quadaxial Cables | 9-84 to 9-88 |
| Quadrax Contacts | 9-93 |




Catalog 1654025
Revised 3-13

www.te.com

Dimensions are shown for reference purposes only. Specifications subject to change.

Dimensions are in millimeters unless otherwise specified.

USA: +1 800 522 6752
Asia Pacific: +86 0 400 820 6015
UK: +44 800 267 666

For additional support numbers please visit www.te.com

## Part Index (Continued)


| Product or Part Number | Page Number |
|---|---|
| Ray 101 | 9-99, 9-100 |
| RAY 101-10.0 | 6-25 |
| RAY 101-12.5 | 6-25 |
| RAY 101-20.0 | 6-25 |
| RAY 101-3.0 | 6-25 |
| RAY 101-4.0 | 6-25 |
| RAY 101-6.0 | 6-25 |
| RAY 101-7.5 | 6-25 |
| Ray 103 | 9-99 |
| Ray 10X-10.0 | 9-100 |
| Ray 10X-12.5 | 9-100 |
| Ray 10X-20.0 | 9-100 |
| Ray 10X-3.0 | 9-100 |
| Ray 10X-4.0 | 9-100 |
| Ray 10X-6.0 | 9-100 |
| Ray 10X-7.5 | 9-100 |
| Ray 90 | 9-99 |
| Ray 90 -10.0 | 9-100 |
| Ray 90 -12.5 | 9-100 |
| Ray 90 -15.0 | 9-100 |
| Ray 90 -20.0 | 9-100 |
| Ray 90 -25.0 | 9-100 |
| Ray 90 -3.0 | 9-100 |
| Ray 90 -30.0 | 9-100 |
| Ray 90 -4.0 | 9-100 |
| Ray 90 -5.0 | 9-100 |
| Ray 90 -6.0 | 9-100 |
| RayBlock 105 Tubing | 3-63 |
| RayBlock 105 Kit 0102-A0 | 3-64 |
| RayBlock 105 Kit 0103-A0 | 3-64 |
| RayBlock 105 Kit 0105-A0 | 3-64 |
| RayBlock 105 Kit 0107-A0 | 3-64 |
| RayBlock 105 Kit 0110-A0 | 3-64 |
| RayBlock 105 Kit 0504-A0 | 3-64 |
| RayBlock 85 Tubing | 3-61 |
| RayBlock 85 Kit 0102-A0 | 3-62 |
| RayBlock 85 Kit 0107-A0 | 3-62 |
| RayBlock 85 Kit 0203-A0 | 3-62 |
| RayBlock 85 Kit 0405-A0 | 3-62 |
| RayBlock 85 Kit 0504-A0 | 3-62 |
| RayBlock 85 Kit 0510-A0 | 3-62 |
| RayBraid Tubular Braiding | 9-99 to 9-100 |
| Raychem C-Wrap Side Entry Repair Sleeve | 8-70, 8-71 |
| Raychem FlexiScreen Backshells | 6-77 |
| Raychem Marine High-Voltage Termination & Splice Kits | 7-15, 7-16 |
| Raychem RT-555 Heat Shrink Tape | 5-5 |
| Raychem Spin Lock Backshell | 6-85 |
| Raychem System 25 | 3-25 |
| RayOLOn Kits | 4-112 |
| Rayrim Edging Material | 3-65 |
| RaySpool | 3-67 |
| Raythane FR | 9-93 |
| Raythane, NT/Thermorad NTFR, Rayolin and AFR | 9-110 |
| RB-110 | 6-79 |

| Product or Part Number | Page Number |
|---|---|
| RB-114 | 6-79 |
| RBD-50-L-00, -01, -02, -03, -04 | 8-62 |
| RBD-50-M-00, -01, -02, -03, -04 | 8-62 |
| RBD-50-S-00, -01, -02, -03, -04 | 8-62 |
| RBD-75-L-00, -01, -02, -03, -04 | 8-62 |
| RBD-75-M-00, -01, -02, -03, -04 | 8-62 |
| RBD-75-S-00, -01, -02, -03, -04 | 8-62 |
| RBK-ILS-Processor-Mk11 | 10-30, 10-31 |
| RF One-Step BNC/TNC Connectors | 2-3, 8-59 to 8-64 |
| RG Coaxial Cables | 2-3 |
| RH3960 Tinel Kit | 6-85 |
| RH-396X Tinel-Lock tool | 10-7 |
| RHW Tubing | 3-70 |
| RMW Tubing | 3-72 |
| RNF-100 Tubing | 3-74 |
| RNF-150 Tubing | 3-76 |
| RNF-3000 Tubing | 3-78 |
| RP-4800 Tubing | 3-80 |
| RPPM Tubing | 3-82 |
| RT-3 Tubing | 3-84 |
| RT-375 Tubing | 2-11, 3-86 |
| RT555 Tubing | 3-88, 3-90 |
| RT-770 Tubing | 2-11, 3-92 |
| RT-780 Tubing | 2-3, 2-11, 3-94 |
| RT-790 Tubing | 2-11, 3-96 |
| RTD-50-L-00 | 8-63 |
| RTD-50-L-01 | 8-64 |
| RTD-50-L-02 | 8-64 |
| RTD-50-L-03 | 8-63 |
| RTD-50-L-04 | 8-63 |
| RTD-50-M-00 | 8-63 |
| RTD-50-M-01 | 8-64 |
| RTD-50-M-02 | 8-64 |
| RTD-50-M-03 | 8-63 |
| RTD-50-M-04 | 8-63 |
| RTD-50-S-00 | 8-63 |
| RTD-50-S-01 | 8-64 |
| RTD-50-S-02 | 8-64 |
| RTD-50-S-03 | 8-63 |
| RTD-50-S-04 | 8-63 |
| RTD-75-L-00, -01, -02, -03, -04 | 8-63 |
| RTD-75-M-00 | 8-63 |
| RTD-75-M-01, -02 | 8-64 |
| RTD-75-M-03, -04 | 8-63 |
| RTD-75-S-00 | 8-63 |
| RTD-75-S-01, -02 | 8-64 |
| RTD-75-S-03, -04 | 8-63 |
| RW-175 Tubing | 3-98 |
| RW-200 Tubing | 3-100 |
| RW-200E Tubing | 3-100 |
| S01/S02/S03 | 8-48 |
| S01-01-R | 8-50, 8-53 |
| S01-02-R | 8-50, 8-53 |
| S01-03-R | 8-50, 8-53 |
| S01-04-R | 8-50, 8-53 |

| Product or Part Number | Page Number |
|---|---|
| S01-05-R | 8-50, 8-53 |
| S02-01-R | 8-50, 8-53 |
| S02-02-R | 8-50, 8-53 |
| S02-03-R | 8-50, 8-53 |
| S02-04-R | 8-50, 8-53 |
| S02-05-R | 8-50, 8-53 |
| S02-06-R | 8-50, 8-53 |
| S02-07-R | 8-50, 8-53 |
| S02-08-R | 8-50, 8-53 |
| S02-09-R | 8-50, 8-53 |
| S02-10-R | 8-50, 8-53 |
| S02-11-R | 8-50, 8-53 |
| S02-12-R | 8-50, 8-53 |
| S02-13-R | 8-50, 8-53 |
| S02-14-R | 8-50, 8-53 |
| S02-15-R | 8-50, 8-53 |
| S02-16-R | 8-50, 8-53 |
| S02-17-R | 8-50, 8-53 |
| S02-18-R | 8-50, 8-53 |
| S02-19-R | 8-50, 8-53 |
| S03-01-R | 8-50 |
| S03-02-R | 8-50 |
| S03-03-R | 8-50 |
| S03-04-R | 8-50 |
| S03-05-R | 8-50 |
| S03-06-F | 8-50 |
| S03-07-R | 8-50 |
| S03-08-R | 8-50 |
| S03-09-R | 8-50 |
| S03-10-R | 8-50 |
| S1006 | 5-2, 5-3 |
| S1009 | 5-2, 5-3 |
| S1017 | 2-9, 2-12, 5-2, 5-3 |
| S1030 | 2-9, 2-12, 5-2, 5-3, 7-9 |
| S1048 | 2-9, 2-12, 5-2, 5-3, 7-9 |
| S1124 | 2-9, 2-12, 5-2, 5-3 |
| S-1125 | 2-9, 2-12, 3-25 |
| S1125 | 5-2, 5-3 |
| S1255 -04 | 2-9, 2-11, 2-12, 5-2, 5-3 |
| S-1264 | 2-11, 2-12 |
| S1264 | 5-2, 5-3 |
| S1275 | 7-9 |
| S1278 | 5-2, 5-3 |
| S1278-01 | 5-2 |
| S1278-02 | 5-2 |
| S1297 | 5-2, 5-3 |
| S1305 | 5-2, 5-3 |
| S1305-01 | 5-2 |
| S200 | 8-48 |
| S200-1-00, -01 | 8-51 |
| S200-1-1-WI-22-9 | 8-51 |
| S200-2-00, -01 | 8-51 |
| S200-2-1-WI-22-9 | 8-51 |
| S200-3-00, -01 | 8-51 |
| S200-3-1-WI-22-9 | 8-51 |
| S200-4-00, -01 | 8-51 |






Catalog 1654025
Revised 3-13

www.te.com

Dimensions are shown for reference purposes only. Specifications subject to change.

Dimensions are in millimeters unless otherwise specified.

USA: +1 800 522 6752
Asia Pacific: +86 0 400 820 6015
UK: +44 800 267 666

For additional support numbers please visit www.te.com

## Part Index (Continued)


| Product or Part Number | Page Number |
|---|---|
| S200-4-1-WI-22-9 | 8-51 |
| S200-5-00, -01 | 8-51 |
| S200-5-1-WI-22-9 | 8-51 |
| S-500-0255-585-2 | 8-92 |
| S92-10-R | 8-50 |
| SCL Tubing | 3-102 |
| SCT Tubing | 3-104 |
| SCT no. 1, no. 2, no. 3, no. 4 | 3-105 |
| SeaLAN Ethernet Cables | 9-79 to 9-80 |
| SEB 4 | 4-114 |
| SESK Kits | 7-10 |
| SFR Tubing | 3-106 |
| SGRP | 8-12 |
| SGRP-1, -2, -, -3, -4 | 8-13, 8-16 |
| SGRS | 8-12 |
| SGRS-1, -2, -3, -4 | 8-13 |
| SGRS-2-58, 3-58, 4-58 | 8-13 |
| SGRS-X-58 | 8-12 |
| SGRT-2-XX | 8-39 |
| SGRT-2-XX | 8-40 |
| SGRT-3-XX | 8-39 |
| SGRT-3-XX | 8-40 |
| SGRT-4-XX | 8-39 |
| SGRT-4-XX | 8-40 |
| SHF-260 Highly Flexible Wire | 9-81 |
| Ship or Shore Breakout Kits | 7-11 |
| shrinkHOop | 4-115 |
| SL* | 6-86 |
| SO175 | 8-48 |
| SO175-1-01 | 8-51 |
| SO175-1-1-55-22-90 | 8-51 |
| SO175-2-00 | 8-51 |
| SO175-2-01 | 8-51 |
| SO175-2-1-55-22-90 | 8-51 |
| SO175-3-00 | 8-51 |
| SO175-3-01 | 8-51 |
| SO175-3-1-55-22-90 | 8-51 |
| SO175-4-00 | 8-51 |
| SO175-4-01 | 8-51 |
| SO175-4-1-55-22-90 | 8-51 |
| SO175-5-00 | 8-51 |
| SO175-5-01 | 8-51 |
| SO175-5-1-55-22-90 | 8-51 |
| SO63 | 8-48 |
| SO63-1-00 | 8-49, 8-53 |
| SO63-1-01 | 8-49 |
| SO63-1-55-20-90 | 8-49, 8-53 |
| SO63-1-55-22-90 | 8-49, 8-53 |
| SO63-1-55-24-90 | 8-49, 8-53 |
| SO63-1-55-26-90 | 8-49, 8-53 |
| SO63-1-9030 | 8-49 |
| SO63-2-00 | 8-49, 8-53 |
| SO63-2-01 | 8-49 |
| SO63-2-55-20-90 | 8-49, 8-53 |
| SO63-2-55-22-90 | 8-49, 8-53 |
| SO63-2-55-24-90 | 8-49, 8-53 |

| Product or Part Number | Page Number |
|---|---|
| SO63-2-55-26-90 | 8-49, 8-53 |
| SO63-2-9030 | 8-49 |
| SO63-3-00 | 8-49, 8-53 |
| SO63-3-01 | 8-49 |
| SO63-3-55-20-90 | 8-49, 8-53 |
| SO63-3-55-22-90 | 8-49, 8-53 |
| SO63-3-55-24-90 | 8-49, 8-53 |
| SO63-3-55-26-90 | 8-49, 8-53 |
| SO63-3-9030 | 8-49 |
| SO63-4-00 | 8-49, 8-53 |
| SO63-4-01 | 8-49 |
| SO63-4-55-20-90 | 8-49, 8-53 |
| SO63-4-55-22-90 | 8-49, 8-53 |
| SO63-4-55-24-90 | 8-49, 8-53 |
| SO63-4-55-26-90 | 8-49, 8-53 |
| SO63-4-9030 | 8-49 |
| SO63-5-00, | 8-49, 8-53 |
| SO63-5-01 | 8-49 |
| SO63-5-55-20-90 | 8-49, 8-53 |
| SO63-5-55-22-90 | 8-49, 8-52 |
| SO63-5-55-24-90 | 8-49, 8-52 |
| SO63-5-55-26-90 | 8-49, 8-52 |
| SO63-5-9030 | 8-49 |
| SO96 | 8-48 |
| SO96-1-01 | 8-51 |
| SO96-1-55-22-90 | 8-51 |
| SO96-2-01 | 8-51 |
| SO96-2-55-22-90 | 8-51 |
| SO96-3-01 | 8-51 |
| SO96-3-55-22-90 | 8-51 |
| SO96-4-01 | 8-51 |
| SO96-4-55-22-90 | 8-51 |
| SO96-5-01 | 8-51 |
| SO96-5-55-22-90 | 8-51 |
| SolderGrip Closed End Splices | 8-12 to 8-17 |
| SolderGrip Insulated Terminals | 8-38 to 8-41 |
| SolderShield Shielded & Coaxial Cable Splices | 8-66 to 8-69 |
| SolderSleeve Coaxial Cable Terminators | 8-55 to 8-58 |
| SolderSleeve PCB Coaxial Cable Terminators | 8-57 to 8-58 |
| SolderSleeve Shield Terminators | 8-48 to 8-53 |
| SolderSleeve Termination Devices | 9-93 |
| SolderSleeve Wire Splices | 8-6 to 8-11 |
| SolderSleeve Wire Terminators | 8-43 to 8-46 |
| Soldertact Contact Devices | 2-3 |
| SolderTacts Shielded One-Piece Solder Contacts | 8-73 |
| SP175-1-00 | 8-51 |
| Space Grade Data Bus Components | 8-101 to 8-104 |
| SPEC 44 Wire and Cable | 9-3 to 9-9 |
| SPEC 55 Wire and Cable | 9-10 to 9-20 |
| Spin-Lock Adaptors | 2-3 |
| Splice Kits | 8-102 |
| SRFR | 3-108 |

| Product or Part Number | Page Number |
|---|---|
| SSB, D, T, F to 8S | 4-106 |
| SSB-1202 FR | 4-107 |
| SSB-2002 FR | 4-107 |
| SSC | 4-60 |
| SSC-1, -2, -3, -4, -5, -6, -7 | 4-61 |
| SSC-5M1 | 4-61 |
| SST Tubing | 3-110 |
| SST-03, -04, -07, -11, -13, -15, -17 -20, -27, -30, -40, -45 | 3-111 |
| SST-FR Tubing | 3-110 |
| Standard Space Cables | 8-102 |
| Steinel HL1802E-074616 SolderSleeve Reflector for HL Tools | 8-70 |
| Steinel HL1910E or HL2010E General Purpose Hot-Air Tool | 8-70 |
| STXR Adaptors | 2-3 |
| T14-23 FR | 4-107 |
| T14-50 FR | 4-107 |
| T150-300 FR | 4-107 |
| T3-9 FR | 4-107 |
| T400 FR | 4-107 |
| T42-100 FR | 4-107 |
| T500-600 FR | 4-107 |
| TAT-125 Tubing | 3-112 |
| TC Caps | 3-114 |
| TC4001, 4003, 4005 | 3-115 |
| TCFS/R | 7-6 |
| TCFS/R-12, -16, -20, -24, -30, -36 | 7-8 |
| TFE Tubing | 3-116 |
| TFE-R Tubing | 3-116 |
| TG-23 | 5-5 |
| TG-24 | 5-5 |
| Themocouple EX | 9-63 |
| Thermocouple Extension Cable | 9-62 to 9-64 |
| Thermocouple JX | 9-63 |
| Thermocouple KX | 9-63 |
| Thermocouple TX | 9-63 |
| ThermoGun HG Hot-Air Heating Tool | 10-32, 10-33 |
| Thermorad HT (Modified ETFE) | 9-93 |
| Thermorad HTF/Fluroelastomer Cable Jacket Material | 9-110 |
| Thermorad F | 9-93 |
| Thermorad FL | 9-93 |
| Thermorad K (Modified PVDF) | 9-93 |
| Thermorad NTFR | 9-93 |
| Thermorad O | 9-93 |
| Thermorad S | 9-93 |
| Thermorad/Thermorad F Cable Jacket Material | 9-109 |
| Threaded Triaxial Connectors | 8-102 |
| Tinel-Lock Ring | 6-26 |
| TMS-SCE-3/16-2.0-9 | 8-105 |
| Triaxial Size 8 Contacts | 8-100 |
| Tubing Kits and Mini-Spools | 3-118 |
| Twinax Contacts | 9-93 |
| Type 99M Wire | 9-23 to 9-25 |

## Part Index (Continued)


| Product or Part Number | Page Number |
|---|---|
| Type AFR | 9-115 |
| Type FTR | 9-115 |
| Type TR | 9-115 |
| Type ZHI | 9-115 |
| Type ZHPCG | 9-115 |
| Universal Serial Bus (Hi-Speed) | 9-92 |
| Universal Serial Bus (Super-Speed) | 9-92 |
| URHR-1, 2, 3, 4, 5 | 4-115 |
| URHT Tubing | 3-120 |
| URHT-200 | 3-121 |
| URHT-300 | 3-121 |
| UXL-ETFE | 9-93 |
| Versafit Tubing | 3-122 |
| Versaflex Tubing | 3-124 |
| Versaflex-FR Tubing | 3-124 |
| VG95218 Pt 28 Multicore Cables | 2-3 |
| XFFR Tubing | 3-126 |
| XFFR-03, 04, -07, -11, -15, -20, -30 | 3-127 |
| Zerohal | 9-93 |
| Zerohal 100A Wire | 9-27 to 9-29 |
| Zerohal 100G Wire | 9-30 to 9-32 |
| Zerohal Cable Jacket Material | 9-101 to 9-103 |
| Zerohal PROFIBUS Cables | 9-82 to 9-83 |
| ZH-100 Tubing | 3-128 |
| ZHPCG-35-1 | 9-117 |
| ZHPCG-35-1.5 | 9-117 |
| ZHPCG-35-10 | 9-117 |
| ZHPCG-35-120 | 9-117 |
| ZHPCG-35-150 | 9-117 |
| ZHPCG-35-16 | 9-117 |
| ZHPCG-35-184 | 9-117 |
| ZHPCG-35-2.5 | 9-117 |
| ZHPCG-35-240 | 9-117 |
| ZHPCG-35-25 | 9-117 |
| ZHPCG-35-300 | 9-117 |
| ZHPCG-35-35 | 9-117 |
| ZHPCG-35-4 | 9-117 |
| ZHPCG-35-400 | 9-117 |
| ZHPCG-35-50 | 9-117 |
| ZHPCG-35-6 | 9-117 |
| ZHPCG-35-70 | 9-117 |
| ZHPCG-35-95 | 9-117 |
| ZHTM Tubing | 3-130 |






Catalog 1654025
Revised 3-13

www.te.com

Dimensions are shown for reference purposes only. Specifications subject to change.

Dimensions are in millimeters unless otherwise specified.

USA: +1 800 522 6752
Asia Pacific: +86 0 400 820 6015
UK: +44 800 267 666

For additional support numbers please visit www.te.com

## Engineering Notes



Catalog 1654025
Revised 3-13

www.te.com

Dimensions are shown for reference purposes only. Specifications subject to change.

Dimensions are in millimeters unless otherwise specified.

USA: +1 800 522 6752
Asia Pacific: +86 0 400 820 6015
UK: +44 800 267 666

For additional support numbers please visit www.te.com

# Global Contacts

## Americas

**United States** – Harrisburg, PA
**Product Information Center:**
**(Technical Support)**
Phone: +800-522-6752
Fax: +717-986-7575

Menlo Park, CA 94025-1164
USA
Phone: +1-800-926-2425
+1-650-361-3860
Fax: +1-717-986-7575

## Asia

Phone: +86-400-820-6015

## Europe

**Austria**
Phone: +43-1-905-601-228

**Baltic Regions**
Phone: +46-8-5072-5000

**Benelux**
Phone: +31-73-6246-999

**France**
Phone: +33-1-34-20-86-86

**Germany**
Phone: +49-6251-133-1999

**Italy**
Phone: +39-011-401-2632

**Nordic**
Phone: ++46-8-5072-5000

**Spain/Portugal**
Phone: +34-93-2910366

**Switzerland**
Phone: +41-52-633-66-26

**United Kingdom**
Phone: +44-800-267-666

**Czech Republic**
Phone: +420-800-701-462

**Poland**
Phone: +48-800-702-309

**Hungary**
Phone: +36-809-874-04

**Russia**
Phone: +7495-790-790-2

## Need more information?

Technical Support is staffed with specialists well versed in all TE Connectivity products. They can provide you with:

- Technical Support
- Catalogs
- Technical Documents
- Product Samples
- TE Connectivity Authorized Distributor Locations

## Web Site

Visit **www.te.com/ADM** for additional information on all our products and market segments for the Aerospace, Defense and Marine markets.

© Copyright 2002, 2003, 2004, 2009, 2012 and 2013 by TE Connectivity. All Rights Reserved.

ATUM, ALTERA, CHEMINAX, CRES-LOCK, DURASEAL, DYNALINK, ELECTROLOSS FILTERLINE, FASTON, FLEXLINE, FLEXLITE, HARNWARE, HEXASHIELD, MICROFIT, MINIRAY, MINISEAL, MTC, NF-100, PINPAK, POLYCRIMP, QUADLITE, RAYATEN, RAYBLOCK, RAYCHEM, RAYBRAID, RAYFLEX, RAYFOAM, RAYOLIN, RAYOLON, RAYRIM, RAYSPOOL, RAYTHANE, SEALITE, SEALAN, SHRINKHOOP, SOLDERGRIP, SOLDERPAK, SOLDERSHIELD, SOLDERSLEEVE, SOLDERTACTS, SPEC 44, SPEC 55, SPEC 80, SYSTEM 100, TE LOGO, THERMOGUN, THERMORAD, THERMOCOUPLE, TINEL, TINEL-LOCK, TE CONNECTIVITY, TYPE 99, UNIBOOT, VERSAFIT, VERSAFLEX, and ZEROHAL are trademarks.

Other products, logos, and company names mentioned herein may be trademarks of their respective owners.

Kevlar and Teflon are trademarks of E.I. du Pont de Nemours and Company.

Mylar is a trademark of Dupont Teijin Films U.S.

Kynar is a trademark of Atofina Chemicals, Inc.

Skydrol is a trademark of Monsanto Company.

Steinel is a trademark of Steinel GmbH.

LuxCis is a trademark of Radiall, S.A.

PROFIBUS is a trademark of Profibus International.

**Disclaimer**
All information, including illustrations, is believed to be reliable. Users, however, should independently evaluate the suitability of each product for their application. TE Connectivity makes no warranties as to the accuracy or completeness of the information, and disclaims any liability regarding its use. TE Connectivity only obligations are those in the Standard Terms and Conditions of Sale for these products and in no case will TE Connectivity be liable for any incidental, indirect or consequential damages arising from the sale, resale, use, or misuse of the product.

TE Connectivity specifications are subject to change without notice. In addition, TE Connectivity reserves the right to make changes in materials or processing without notification to the Buyer which do not affect compliance with any applicable specification.

Export of TE Connectivity products may require licensing.

Printed in the U.S.A.

TE Connectivity
www.te.com

**te.com**

© 2013 Tyco Electronics Corporation, a TE Connectivity Ltd. Company. All Rights Reserved.
1654025 GIC 7.5K MS 03/2013
TE Connectivity, TE connectivity (logo) and TE (logo) are trademarks. Other logos, product and/or company names might be trademarks of their respective owners.