THIS DRAWING IS UNPUBLISHED. RELEASED FOR PUBLICATION -,- .
© COPYRIGHT - By - ALL RIGHTS RESERVED.

LOC	DIST
AF	50

REVISIONS

P	LTR	DESCRIPTION	DATE	DWN	APVD
	H	REVISED PER ECR-12-013445	18OCT12	KH	PD

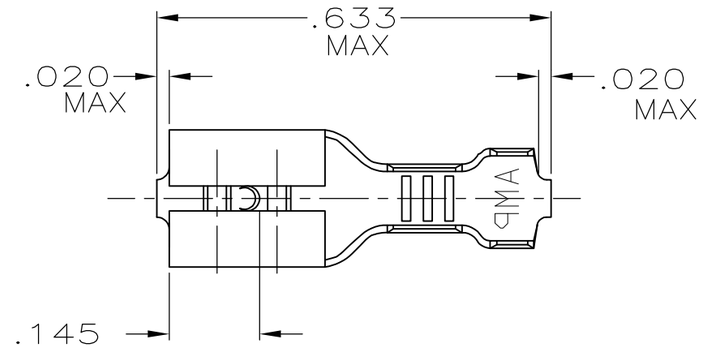

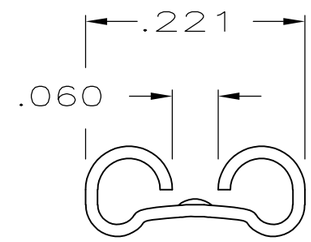

VIEW A–A

1 SUPPLIED IN LOOSE PIECE

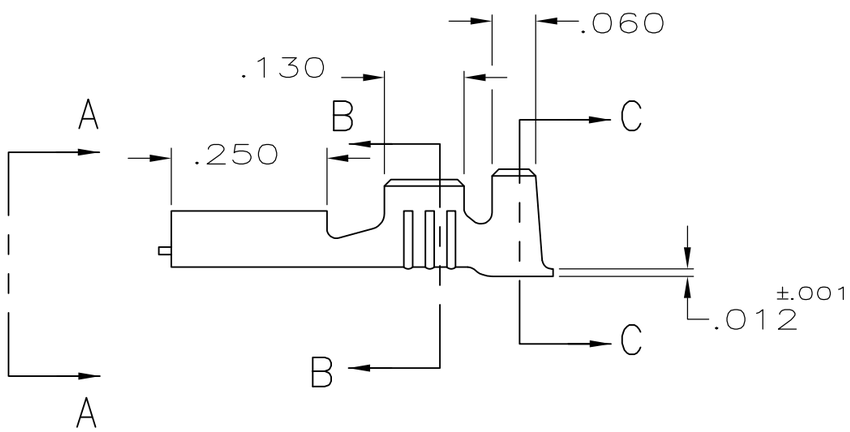

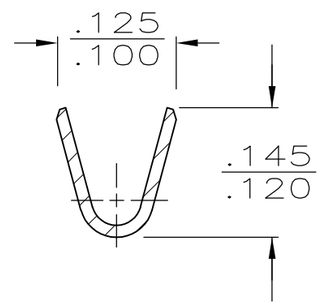

SECTION B–B

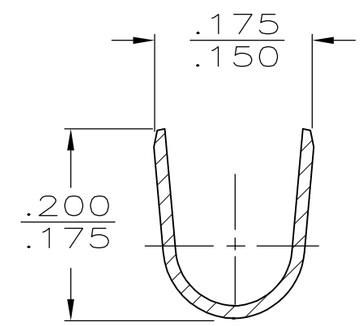

SECTION C–C

STRIP FORM	FINISH	INSUL RANGE	WIRE SIZE	MATING TAB THK ±.001	PART NO
42452–2	TIN	.090–.130 DIA	20–16 AWG	.020	42566–2
42452–1	–	.090–.130 DIA	20–16 AWG	.020	42566–1

THIS DRAWING IS A CONTROLLED DOCUMENT.

DIMENSIONS: INCHES

TOLERANCES UNLESS OTHERWISE SPECIFIED:
0 PLC ± –
1 PLC ± –
2 PLC ± –
3 PLC ± .010
4 PLC ± –
ANGLES ± –

MATERIAL: BRASS

FINISH: SEE TABLE

DWN JR RUTH 3/5/93
CHK MS FEHER 3/5/93
APVD C MEYERS 3/5/93
PRODUCT SPEC —
APPLICATION SPEC —
WEIGHT —

TE Connectivity

NAME: RECEPTACLE, FASTON, .187 SERIES

SIZE	CAGE CODE	DRAWING NO	RESTRICTED TO
A3	00779	C-42566	—

CUSTOMER DRAWING

SCALE	SHEET	REV
4:1	1 OF 1	H