REVISIONS					
REV	ECO	DESCRIPTION	DATE	BY	APPR
B1	-	RELEASE NEW DWG FORMAT	May.10,2014	DRACK	

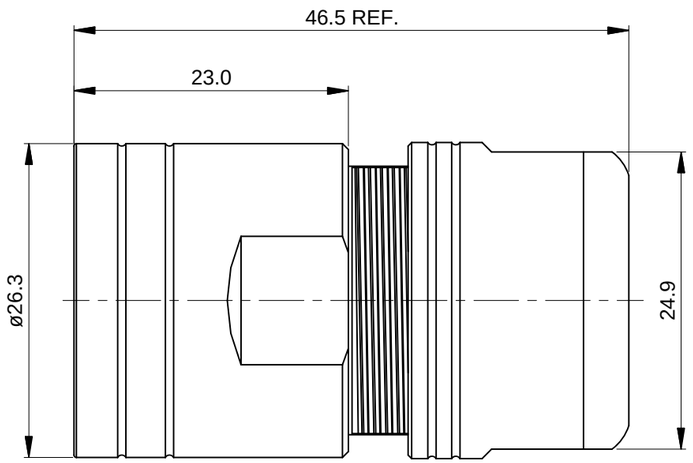

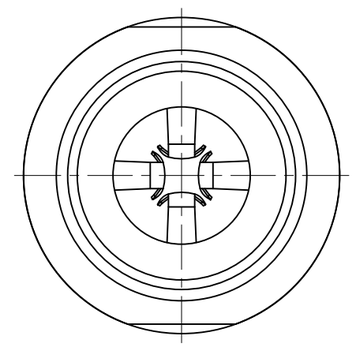

NOTES: UNLESS OTHERWISE SPECIFIED

1. MATERIAL:
   EMI SHIELDING RING: STAINLESS STELL
   SEAL: EPDM
   HOUSING BODY: ZINC DIE CAST, NICKEL PLATED

2. SPECIFICATIONS:
   2.1 DEGREE OF PROTECTION: IP67 (MATED CONDITION)
   2.2 RoHS COMPLIANT

3. ALL DIMENSIONS ARE FOR REFERENCE USE ONLY.

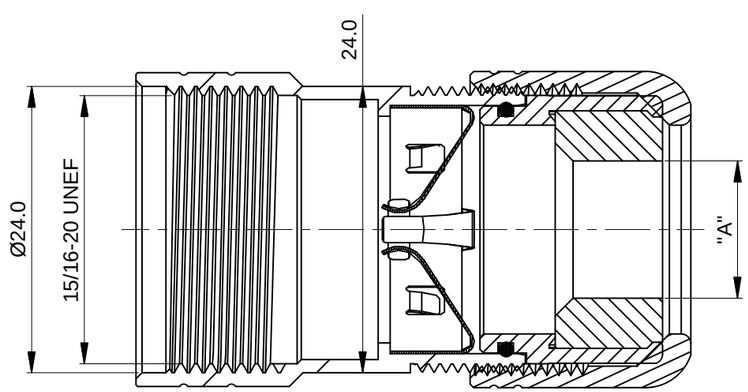

		Cable OD Range
1	MB3CG-S1	7.5~11.0 mm
2	MB3CG-S2	11.0~14.5 mm
3	MB3CG-S3	14.5~17.0 mm

QUANTITY	PART NUMBER	DESCRIPTION	ITEM
	~~SEE PART NUMBER CHART~~		

MATERIALS LIST

UNLESS OTHERWISE SPECIFIED
1) All dimensions are in metric(mm).
2) Tolerances are as follows:
1 PL DEC ±0.30 | Fractions ±1/64
2 PL DEC ±0.15 | Angles ±1°
3 PL DEC ±0.08
3) Note reference = X

MATERIAL SPECIFICATIONS:

PROCESS SPECIFICATIONS:

NEXT ASS'Y:

SIGNATURES		DATE
DRAWN:	Drack	May.10,2014
CHECKED:		
ENGINEER:		
APPROVAL:		
CUSTOMER:		

THIS DRAWING IS SUPPLIED FOR INFORMATION ONLY. DESIGN FEATURES, SPECIFICATIONS AND PERFORMANCE DATA SHOWN HEREON ARE THE PROPERTY OF THE AMPHENOL CORPORATION. NO RIGHTS OF REPRODUCTION ARE IMPLIED. ALL DIMENSIONS ARE SUBJECT TO NORMAL MANUFACTURING VARIATIONS.

Amphenol

Sine Systems - www.amphenol-sine.com
44724 Morley Drive
Clinton Township, MI 48036

M23B,CORD GRIP

SIZE	TYPE	DWG NO:	REVISION
B	C-	MB3CG-Sx	B1

SCALE: NONE

SHEET 1 OF 1

TITLE: M23B,CORD GRIP
DWG NO: MB3CG-Sx
REV: B1
SH: 1
OF: 1