Feb.1.2018 Copyright 2018 HIROSE ELECTRIC CO., LTD. All Rights Reserved.

	COUNT	DESCRIPTION OF REVISIONS	BY	CHKD	DATE		COUNT	DESCRIPTION OF REVISIONS	BY	CHKD	DATE
△					. .	△					. .
△					. .	△					. .
△					. .	△					. .

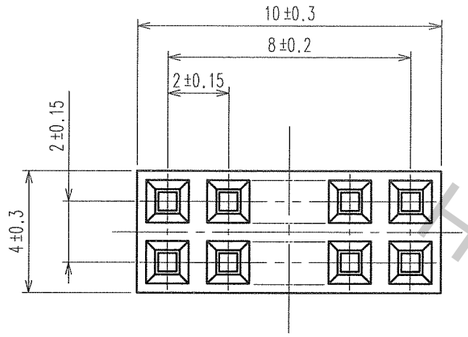

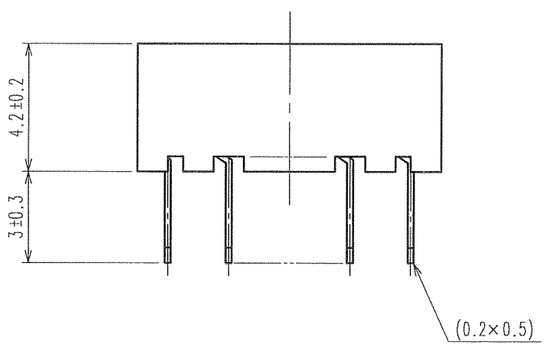

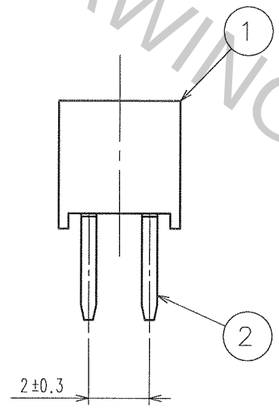

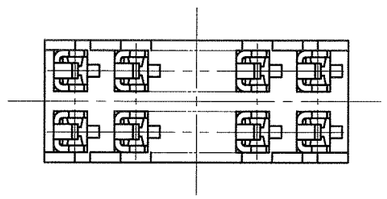

RECOMMENDED PC BOARD HOLE PATTERN

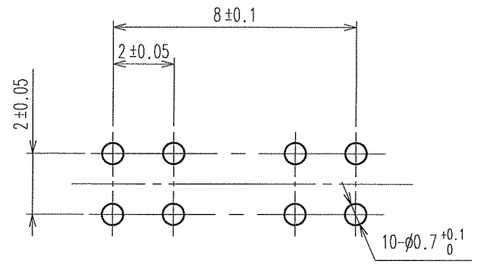

HRS DRAWING FOR REFERENCE

NOTE 1. THE CONTACT CUT SECTION IS UNPLATED.
2. THE DIMENSIONS IN PARENTHESES ARE FOR REFERENCE.

NO.	MATERIAL	FINISH, REMARKS	NO.	MATERIAL	FINISH, REMARKS
1	PBT	BLACK UL94V-0	2	PHOSPHOR BRONZE	CONTACT AREA:GOLD 0.2μm min. DIP AREA:TIN-PLATING 1μm min. UNDER PLATING:NICKEL 1μm min.

CODE NO.(OLD)	DRAWN	DESIGNED	CHECKED	APPROVED	RELEASED
CL	K.NAKAMURA 06.05.20	K.NAKAMURA 06.05.20	H.Ogawa '06.05.20	H.Okawa '06.05.20	. .

SCALE 5 : 1	DRAWING NO. EDC3-081230-21	PART NO. A3C-10DA-2DSA(71)
UNITS mm	HRS HIROSE ELECTRIC CO., LTD	CODE NO. CL621-0504-4-71 1/1

TO

FORM NO.229