PART NUMBER	ENGINEERING NUMBER	FINISH LENGTH
1300060725	104000A01F030	3.00' +1.75" -0 [.9M +44.5 -0]
1300060728	104000A01F060	6.00' +2.19" -0 [1.8M +55.6 -0]
1300060737	104000A01F120	12.00' +3.50" -0 [3.7M +88.9 -0]
1300060741	104000A01F150	15.00' +6.50" -0 [4.6M +165.1 -0]
1300060744	104000A01F200	20.00' +6.50" -0 [6.1M +165.1 -0]
1300060748	104000A01F250	25.00' +12.50" -0 [7.6M +317.5 -0]
1300060751	104000A01F300	30.00' +12.50" -0 [9.11M +317.5 -0]

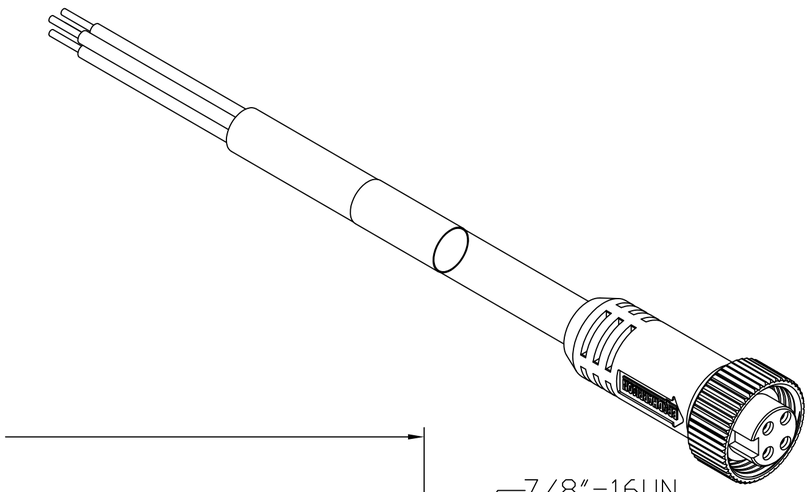

NOTE

1) MATERIAL: SEE TABLE
2) FINISHES: SEE TABLE
3) WRAP LABEL IS MARKED WITH P/N, DATE CODE, VOLTAGE & AMPERAGE
4) MATES WITH: MINI CHANGE, 4 POLE RECEPTACLE
5) ELECTRICAL DATA:
   INLINE CORDSET
   FEMALE A-SIZE WITH FLYING LEADS
   16AWG UNSHIELDED
   POLES: 4
   MAX. VOLTAGE: 600V
   MAX. CURRENT 10A
   PROTECTION IP67
   TEMPERATURE RANGE: -20°C TO 105°C
6) PACKAGING:
   CABLE ASSEMBLIES ARE BAGGED SEPERATELY IN POLY BAGS WITH BAR CODE LABEL ATTACHED TO OUTSIDE OF BAG.

7)ASSEMBLY IS RoHS COMPLIANT.

8)CERTIFICATION
   UL RECOGNIZED, FILE NO. E152210
   CSA CERTIFIED, FILE NO. LR6837

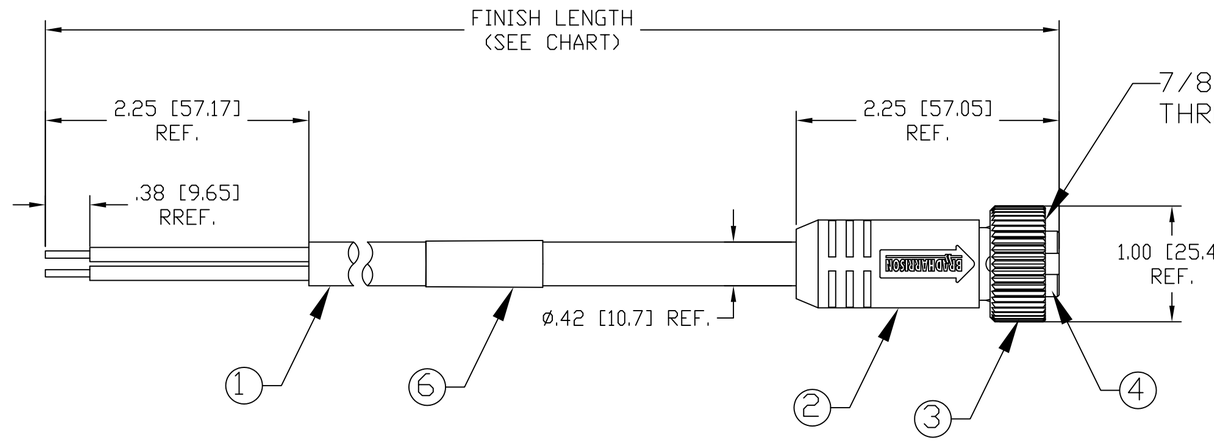

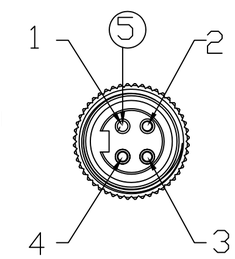

FEMALE
FACE VIEW

P1

1	BLACK
2	WHITE
3	RED
4	GREEN/YELLOW-GND

WIRING DIAGRAM

ITEM	QTY.	DESCRIPTION	MATERIAL	FINISH
6	1	LABEL	PLASTIC FILM	BLACK/YELLOW
5	4	CONTACT SOCKET	COPPER ALLOY	GOLD PLATED
4	1	INSERT	PVC	YELLOW
3	1	COUPLING NUT	ZINC DIE CAST	BLACK E-COATED
2	1	OVERMOLD	PVC	YELLOW
1	1	CABLE, 16AWG-4 TYPE STOOW	PVC	YELLOW

RELEASE
EC NO: WNA2010-0397
DRWN: BWOODMAN 12/22/09
CH'KD: ---
APPR: JFMURPHY 2010/01/05
DESCRIPTION
REV B

QUALITY SYMBOL
▼=0
Ⓒ=0

GENERAL TOLERANCES (UNLESS SPECIFIED)

	mm	INCH
4 PLACES	±----	±---
3 PLACES	±.005	±.005
2 PLACES	±.013	±.010
1 PLACE	±.025	±.020
ANGULAR ±1/2°		

DRAFT WHERE APPLICABLE MUST REMAIN WITHIN DIMENSIONS

DIMENSION STYLE: IN/MM
SCALE: 1:1
DESIGN UNITS: INCH
THIRD ANGLE PROJECTION

DRAWN BY: TWOLDEGE DATE: 2009/07/10
CHECKED BY: BWOODMAN DATE: 2009/07/10
APPROVED BY: JFMURPHY DATE: 2010/01/05
MATERIAL NO.: SEE CHART

TITLE: MINI CHANGE ASSEMBLY
4-POLE FEMALE ST
16/4AWG PVC

molex MOLEX INCORPORATED

DOCUMENT NO.: SD-130006-010
SHEET NO.: 1 0F 1
SIZE: C

THIS DRAWING CONTAINS INFORMATION THAT IS PROPRIETARY TO MOLEX INCORPORATED AND SHOULD NOT BE USED WITHOUT WRITTEN PERMISSION