STYLE	P/N	J	K	L	O
STANDARD	171826-0100	.339/8.61	.048/1.22	1.261/32.02	.12/3.0
FINGER-PROOF	171826-0200	.301/7.65	.031/0.79	1.206/30.63	.07/1.7

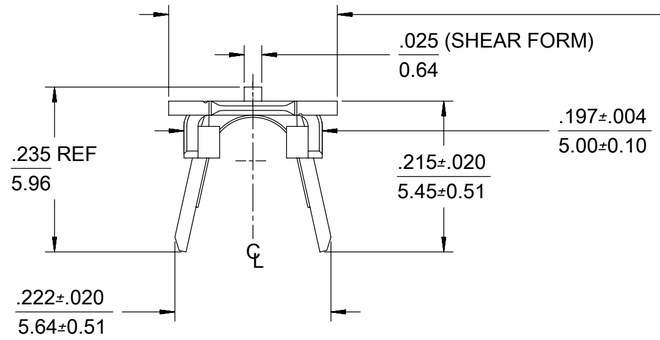

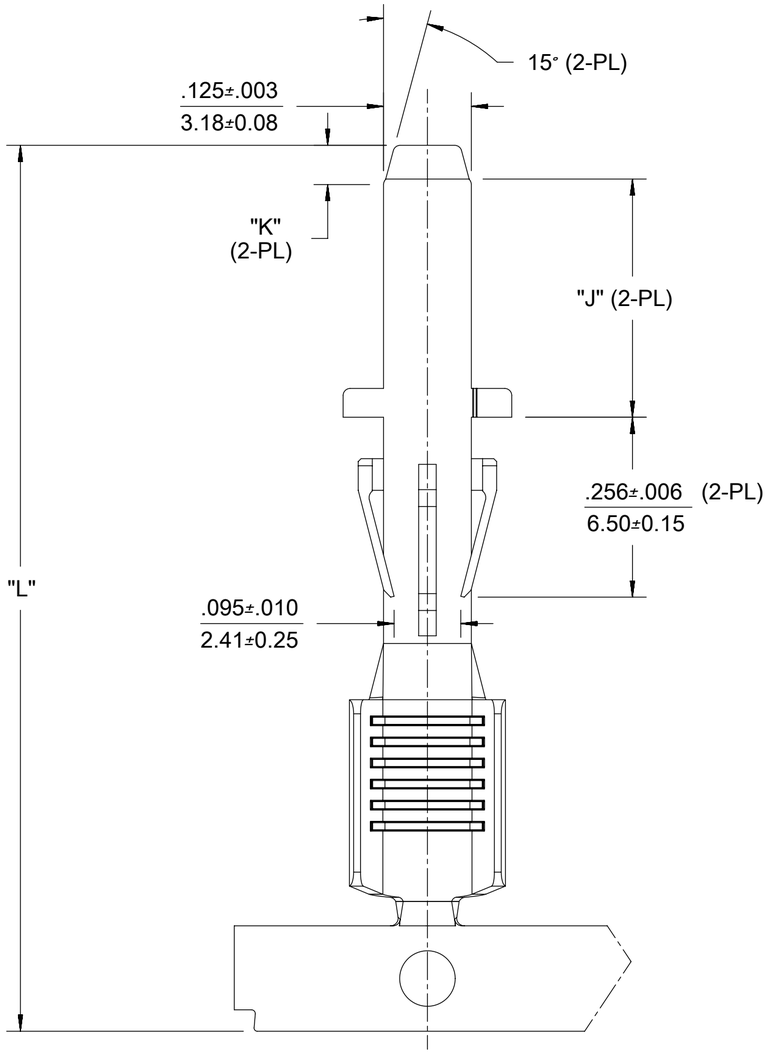

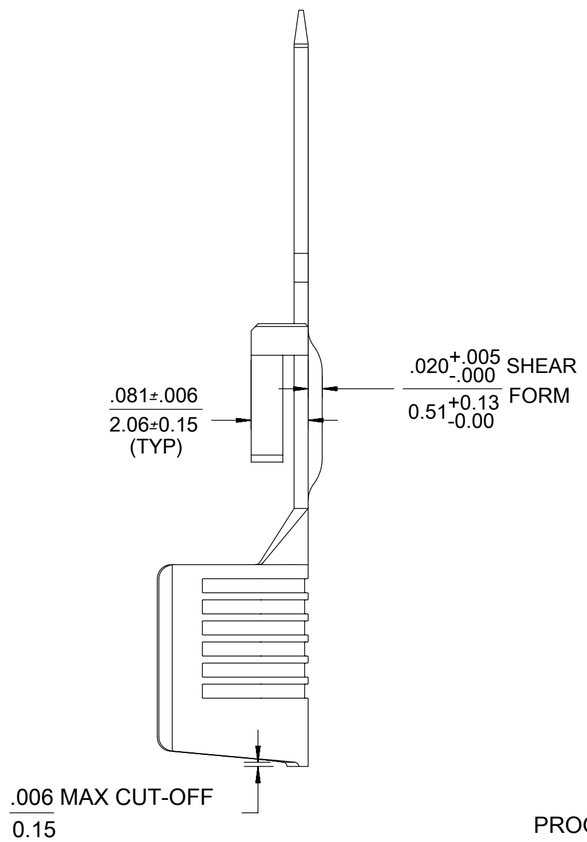

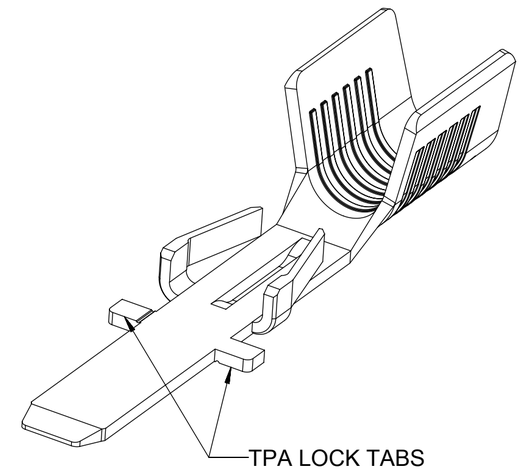

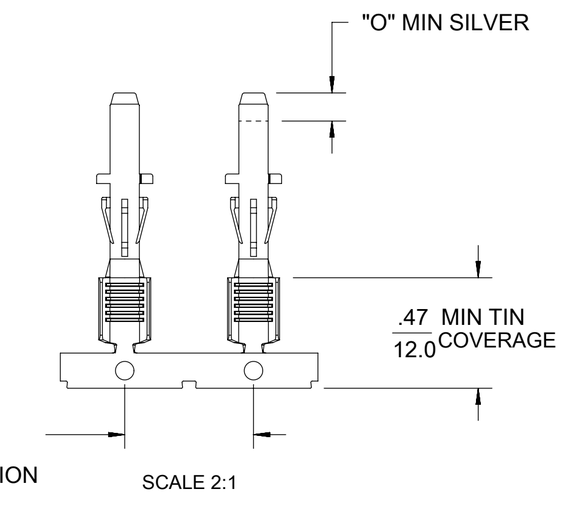

NOTES:

1. MATERIAL: .020/0.51 THICK HSM COPPER.
2. FINISH: SELECT SILVER (.000100/0.00254 MIN) & SELECT MATTE TIN (.000100/0.00254 MIN) OVER NICKEL OVERALL.
3. PRODUCT SPECIFICATION: PS-171825-001.
4. PACKAGING: PK-171826-001 (PENDING).
5. MATES WITH: 171825 FEMALE CRIMP TMLS, FOR USE IN 172673/43680 PLUG HSGS.
6. SINGLE CRIMP TO 10 OR 12AWG STRANDED COPPER WIRE. TINNED WIRE RECOMMENDED.
7. TERMINALS INDICATED AS "FINGER-PROOF" ARE DESIGNED TO MINIMIZE ACCESSIBILITY TO LIVE PARTS PER UL1977 AND UL60950 (FORMERLY UL1950) FINGER PROBE REQUIREMENTS.

TM-171826-000

RELEASE STATUS		RELEASE DATE	

QUALITY SYMBOLS: FA = 0; FC = 0; FD = 0; ▼ = 0; C = 0; ☒ = 0; ■ = 0; C = 0

THIS DRAWING CONTAINS INFORMATION THAT IS PROPRIETARY TO MOLEX ELECTRONIC TECHNOLOGIES, LLC AND SHOULD NOT BE USED WITHOUT WRITTEN PERMISSION

FIX DIM "L"
EC NO: 109541 2016/10/19
DRWN: BAPPELDORN 2016/10/31
CHK'D: JDFOX 2016/11/08
APPR: FSMITH
REV B1

GENERAL TOLERANCES (UNLESS SPECIFIED)

	MM	INCH
4 PLACES	±	±
3 PLACES	±	± 0.01
2 PLACES	± 0.25	± 0.014
1 PLACES	± 0.35	±
0 PLACES	±	±

ANGULAR TOL ± 0.5

DRAFT WHERE APPLICABLE MUST REMAIN WITHIN DIMENSIONS

DIMENSION UNITS: IN/MM
SCALE: 6:1
DRWN BY: GES DATE: 2013/04/02
CHK'D BY: BANDERSON DATE: 2013/04/02
APPR BY: FSMITH DATE: 2013/10/09
DRAWING SIZE: C
THIRD ANGLE PROJECTION

molex®

SUPER-SABRE MALE CRIMP TERMINAL

PRODUCT CUSTOMER DRAWING

SERIES	MATERIAL NUMBER	CUSTOMER
171826	SEE CHART	GENERAL MARKET

DOCUMENT NUMBER	DOC TYPE	DOC PART	SHEET NUMBER
SD-171826-001	PSD	000	1 OF 1

FORMAT: Eng-lega-master-tb-prod-C
REVISION: C
DATE: 2016/02/04