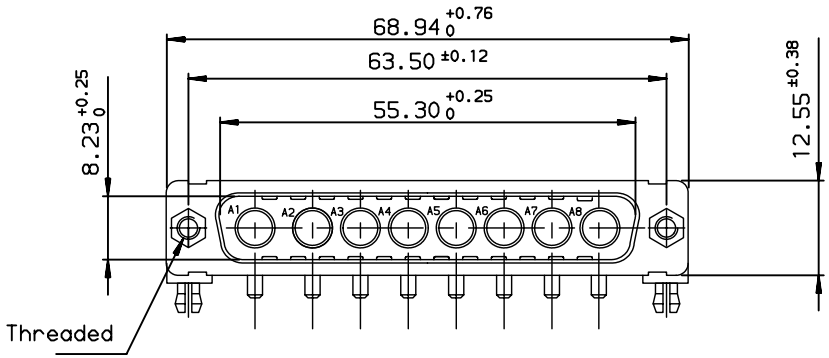

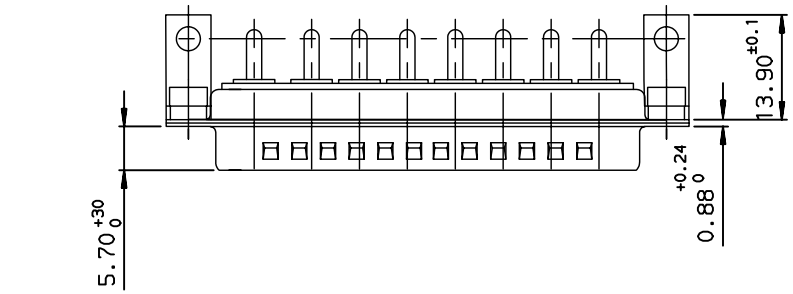

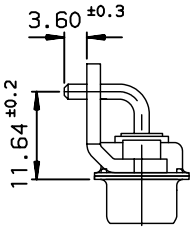

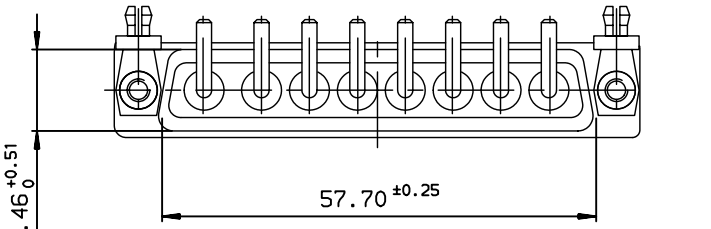

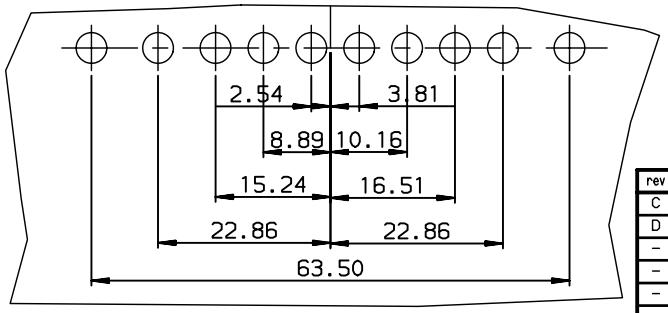

DC08W8P500G30	UNC 4.40
DC08W8P500G40	UNC 4.40
DC08W8P500H30	UNC 4.40
DC08W8P500H40	UNC 4.40
DCL8W8P500G30	M3
DCL8W8P500G40	M3
DCL8W8P500H30	M3
DCL8W8P500H40	M3
PART NUMBER	Threaded A

rev	ecn no	dr	date
C	-	MPE	2003/11/21
D	LS07-0094	MPE	2007/04/05
-	-	-	-
-	-	-	-
-	-	-	-
-	-	-	-
-	-	-	-

European Views

www.fciconnect.com

surface ISO 1302 | tolerance std ISO 406 ISO 1101 | projection | mm

TOLERANCES UNLESS OTHERWISE SPECIFIED

Dr	PESSON	2003/11/21	ANGULAR	LINEAR	0.X	±0.1
Eng	PESSON	2003/11/21			0.XX	±0.1
Chr	LEGARE	2003/11/21	0.XX° ±2°		0.XXX	±0.1
Appr	LEGARE	2003/11/21	Product family			SUB

size A3 | Scale 1.5 | ECN LS07-0094 | Spec ref -

title: PIN CONNECTORS WITH POWERS CONTACTS

dwg no C01-8639-1610 | Rev. D

catalog no - | CUSTOMER | sheet 1 of 1

REV F - 2006-04-17

Copyright FCI.

PDM: Rev:D STATUS: Released Printed: Oct 01, 2010