THIS DRAWING IS UNPUBLISHED. RELEASED FOR PUBLICATION -,- .
© COPYRIGHT - By - ALL RIGHTS RESERVED.

LOC	DIST
AF	50

REVISIONS

P	LTR	DESCRIPTION	DATE	DWN	APVD
	AA	REVISED PER ECR-12-013445	18OCT12	KH	PD

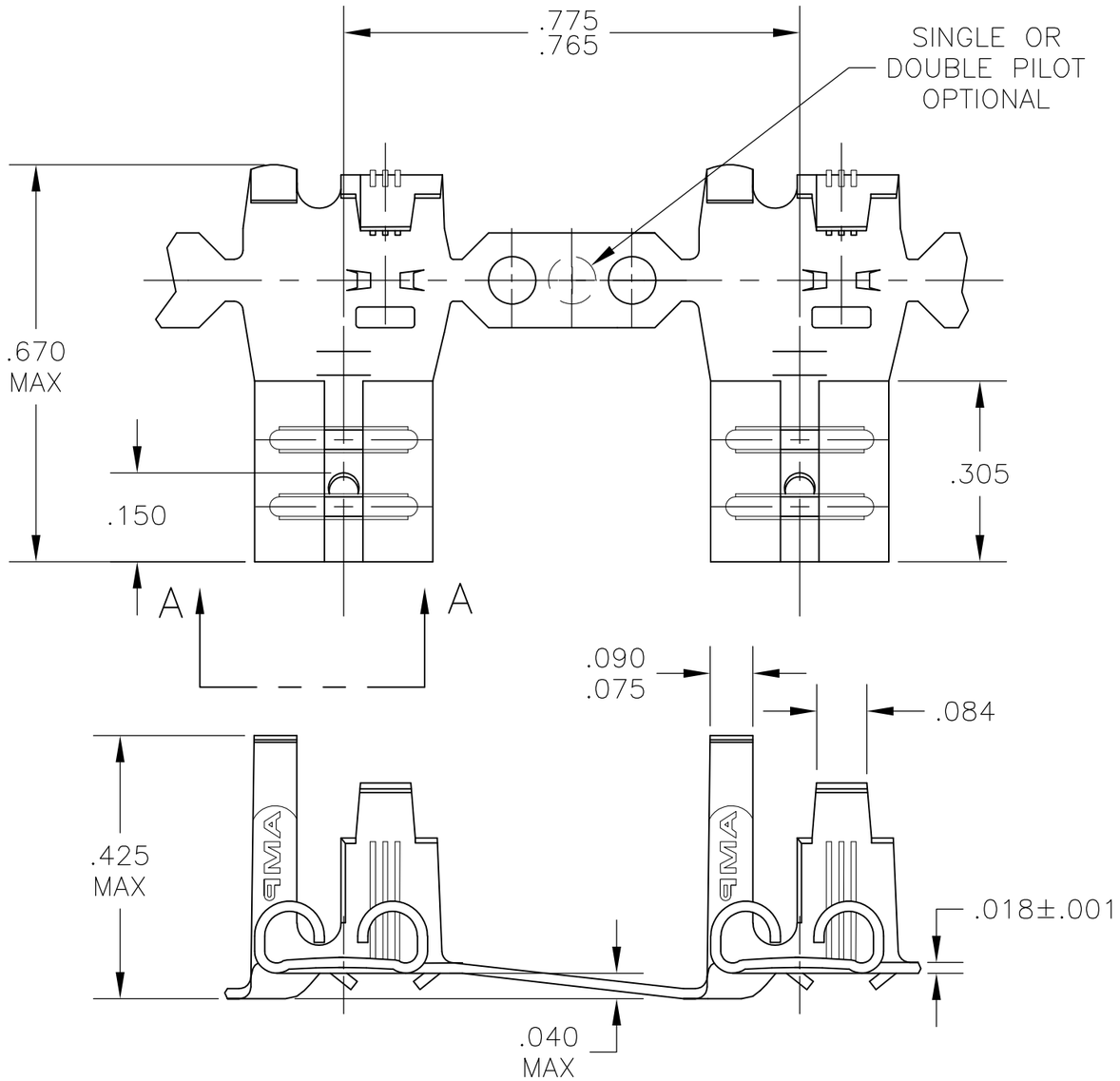

1 CONTINUOUS STRIP ON REELS

2 MATING TAB THK IS .032±.001.

3 WIRE SIZE IS #18-#12 AWG

4 INSULATION RANGE IS .110-.210 DIA.

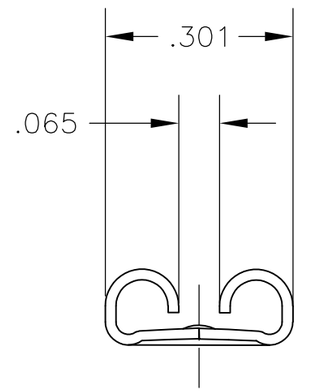

VIEW A-A

FINISH	MATERIAL	PART NO.
NICKEL	#2H STEEL	41531-1
-	BRASS	41531

THIS DRAWING IS A CONTROLLED DOCUMENT.

DIMENSIONS: INCHES

TOLERANCES UNLESS OTHERWISE SPECIFIED:

0 PLC	± -
1 PLC	± -
2 PLC	± -
3 PLC	± .015
4 PLC	± -
ANGLES	± -

MATERIAL: SEE TABLE

FINISH: SEE TABLE

DWN JR RUTH 18OCT02
CHK P DESANTIS 18OCT02
APVD P DESANTIS 18OCT02
PRODUCT SPEC —
APPLICATION SPEC —
WEIGHT —

TE Connectivity

NAME: RECEPTACLE, FLAG, FASTON, .250 SERIES

SIZE	CAGE CODE	DRAWING NO	RESTRICTED TO
A3	00779	C-41531	—

CUSTOMER DRAWING

SCALE 4:1 SHEET 1 OF 1 REV AA