BEZEL P/N	ADAPTER P/N	VERSION	SLEEVE MATERIAL	ADAPTER COLOR	LABEL P/N
106004-3080	106160-0980	1 (ST-SC)	PHOSPHOR BRONZE	METAL	106004-3013
106004-3081	106161-0980		ZIRCONIA		
106004-3082	106160-0970	2 (FC-SC)	PHOSPHOR BRONZE		
106004-3083	106161-0970		ZIRCONIA		
106004-3084	106171-0160	3 (SC-SC)	PHOSPHOR BRONZE	BLACK	
106004-3085	106170-0160		ZIRCONIA		
106004-3086	106171-0170		PHOSPHOR BRONZE	RED	
106004-3087	106170-0170		ZIRCONIA		
106004-3075	106170-0140			BLUE	
106004-3088	86181-0000	4(MTP-MTP)	N/A	BLACK	
106004-3089	86181-0007				
106004-3076	106170-0170	3 (SC-SC)	ZIRCONIA	RED	
106004-3093	106171-0160	3 (SC-SC)	PHOSPHOR BRONZE	BLACK	106170-0404

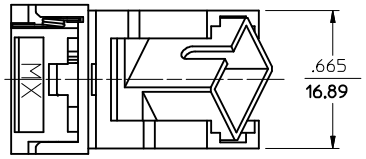

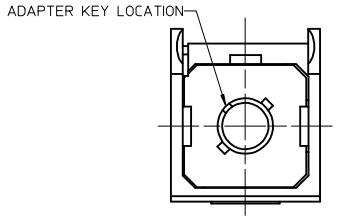

VIEW A
VERSION 1 (ST-SC)
DOOR REMOVED
ROTATED 30° CW

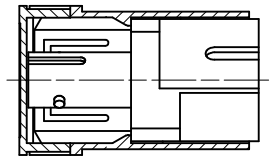

SECTION B-B
VERSION 1 (ST-SC)
ROTATED 30° CW

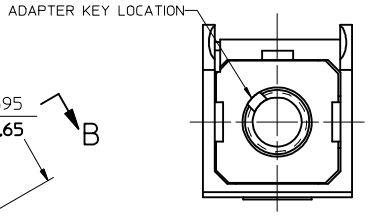

VIEW A
VERSION 2 (FC-SC)
DOOR REMOVED
ROTATED 30° CW

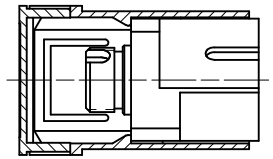

SECTION B-B
VERSION 2 (FC-SC)
ROTATED 30° CW

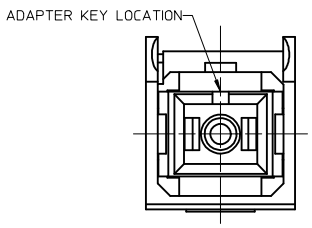

VIEW A
VERSION 3 (SC-SC)
DOOR REMOVED
ROTATED 30° CW

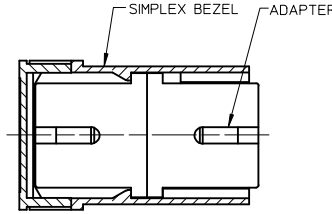

SECTION B-B
VERSION 3 (SC-SC)
ROTATED 30° CW

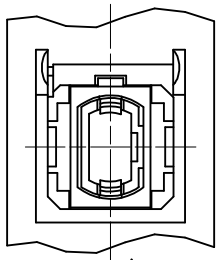

VIEW A
VERSION 4 (MTP-MTP)
DOOR REMOVED
ROTATED 30° CW
SEE NOTE 2

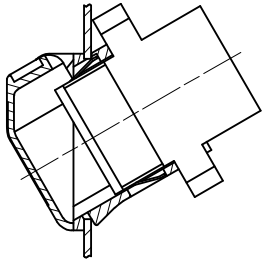

SECTION C-C
VERSION 4 (MTP-MTP)
SEE NOTE 2

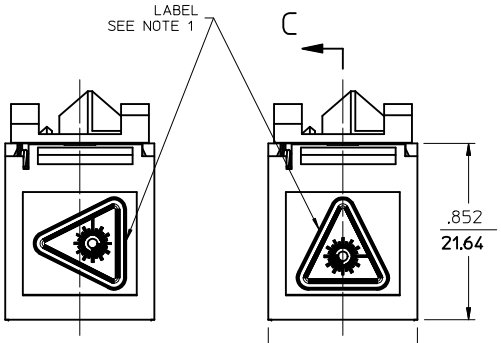

VIEW D

VIEW D

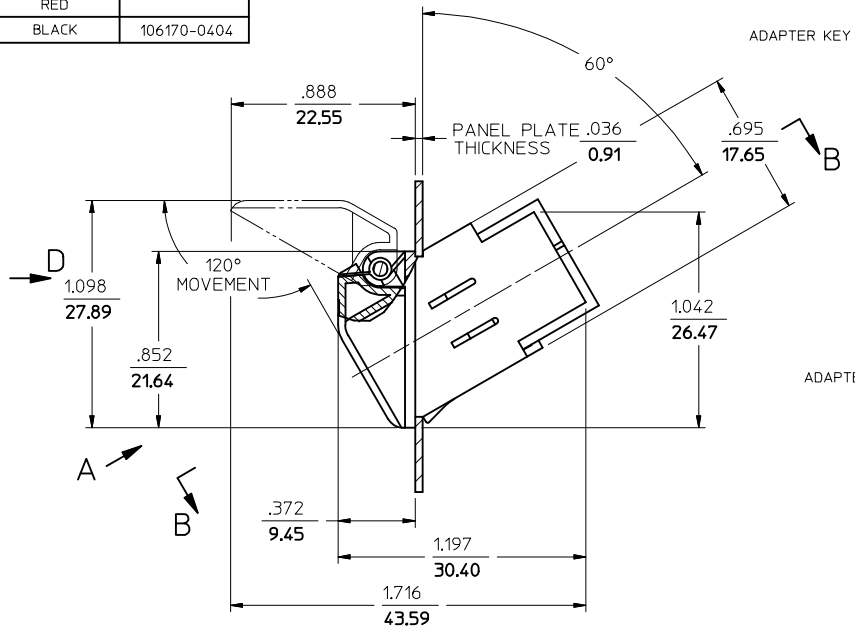

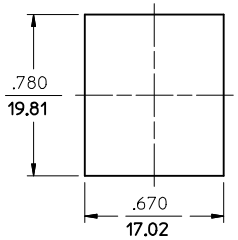

RECOMMENDED
MOUNTING HOLE

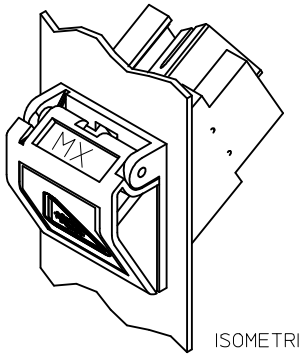

ISOMETRIC VIEW

NOTES:

1. LABEL TO BE INSTALLED BY CUSTOMER.

2. MTP-MTP ADAPTER (VERSION 4) TO BE ASSEMBLED BY CUSTOMER, AFTER BEZEL IS INSTALLED IN PANEL CUTOUT.

3. FOR VERSIONS 1,2, AND 3 ADAPTERS TO BE ASSEMBLIED WITH BEZEL. DUST CAPS ON VERSIONS 1,2, AND 3 TO BE REMOVED ON DOOR SIDE.