No. of Contacts	DIMENSIONS A	DIMENSIONS B
4	2.00	4.00
6	4.00	6.00
8	6.00	8.00
10	8.00	10.00
12	10.00	12.00
14	12.00	14.00
16	14.00	16.00
18	16.00	18.00
20	18.00	20.00
22	20.00	22.00
24	22.00	24.00
26	24.00	26.00
28	26.00	28.00
30	28.00	30.00
32	30.00	32.00
34	32.00	34.00
36	34.00	36.00
38	36.00	38.00
40	38.00	40.00
42	40.00	42.00
44	42.00	44.00
46	44.00	46.00
48	46.00	48.00
50	48.00	50.00
52	50.00	52.00
54	52.00	54.00
56	54.00	56.00
58	56.00	58.00
60	58.00	60.00
62	60.00	62.00
64	62.00	64.00
66	64.00	66.00
68	66.00	68.00
70	68.00	70.00
72	70.00	72.00
74	72.00	74.00
76	74.00	76.00
78	76.00	78.00
80	78.00	80.00
-YµðÁ PIN	DIM. B	+-0.50

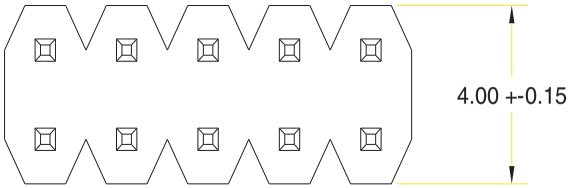

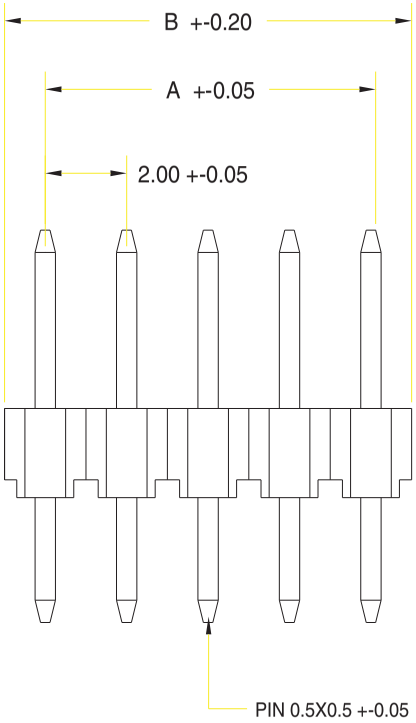

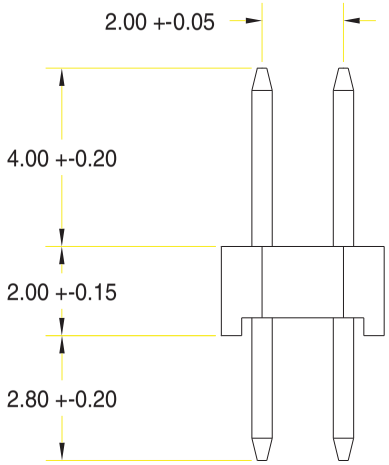

SPECIFICATIONS

Current Rating:	1 Amp
Insulator Resistance:	5000 Mega Ohm Min.
Dielectric withstanding:	500 VAC
Operating Temperature:	-40 Degrees C. to +105 Degrees C.
Contact Material:	Brass or Phospher bronze
Insulator Material:	Polyester,UL 94V-0 Standard: P.B.T
Contact Finish:	Gold/Tin, Selective Plating

Note that "xx" in part number designates number of dual positions, not total contacts.

SULLINS
801 E. MISSION RD.
SAN MARCOS, CA 92069

GENERAL TOLERANCE	
XX. +-	XXX. +-
X. +- 0.20	.XXX +-
.X +- 0.10	X.ß +-
.XX +- 0.05	.Xß +-

SCALE	NTS	DRAWN	DATE 04.18.2000	DWG. NO.	T0030	TITLE	REV.
UNIT	MM	CHECK	DATE	PARTS NO.	PRPNxx2PAEN		SHEET
SIZE		APPROVE	DATE				