THIS DRAWING IS UNPUBLISHED. RELEASED FOR PUBLICATION NOV ,1990.
© COPYRIGHT 1990 By – ALL RIGHTS RESERVED.

LOC	DIST
J	

REVISIONS 変更

P	LTR	DESCRIPTION	DATE	DWN	APVD
	D	REVISED PER ECR-11-001310	21APR11	T.T	T.M

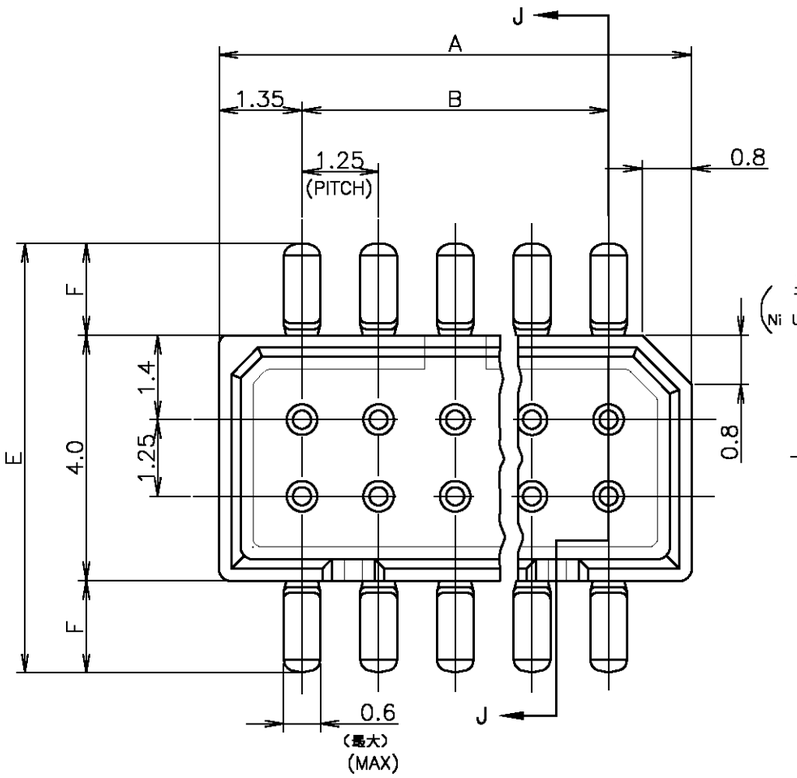

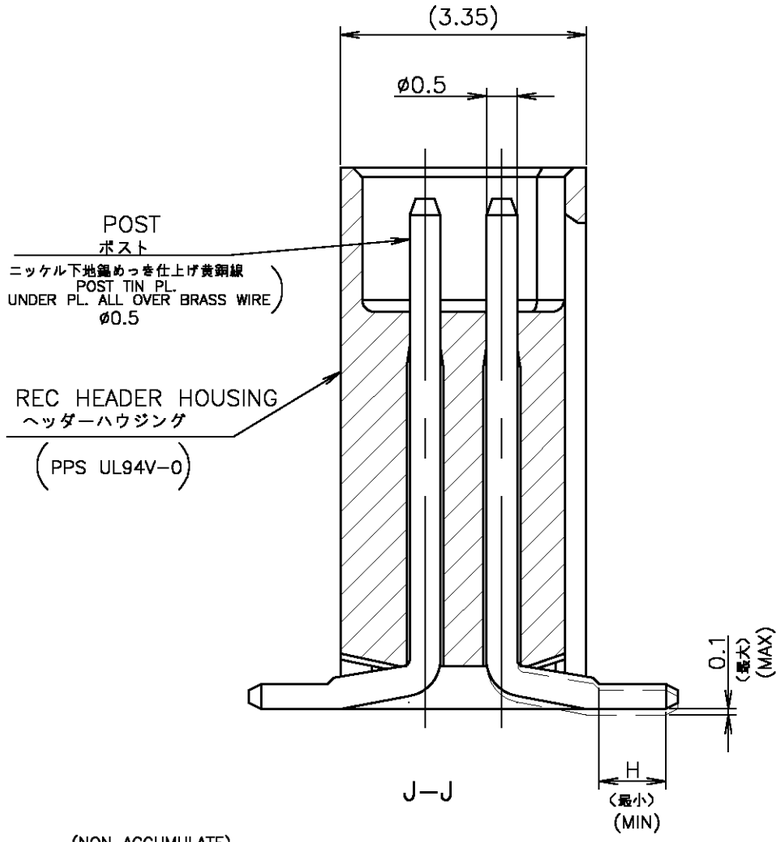

1 嵌合相手製品型番及び、嵌合時寸法は
MATING COUNTER PART NUMBER AND DIMENSIONS
表-1 参照のこと。
AFTER MATING: SEE TABLE 1.

嵌合時寸法: 巾(mm)×高さ(mm)
DIMENSIONS AFTER MATING: WIDE(mm) × HEIGHT(mm)

嵌合相手側コネクタ MATING COUNTER CONN / コネクタ CONN / RECE HDR ASSY \ POST HDR ASSY		SMT TYPE WITHOUT BOSS X-178040-X ハウジング高さ C寸法 HOUSING HEIGHT C DIMENSIONS 6.85	9.35	9.85
DIP TYPE	V TYPE X-176870-X	5.6 (巾W) × 8.0 (高さH)	7.0 (巾W) × 10.5 (高さH)	7.0 (巾W) × 11.0 (高さH)
DIP TYPE	H TYPE X-176892-X	5.6 (巾W) × 8.8 (高さH)	7.0 (巾W) × 11.3 (高さH)	7.0 (巾W) × 11.8 (高さH)
SMT TYPE	V TYPE ポス無 WITHOUT BOSS X-176768X / ポス付 WITH BOSS X-176311-X	5.6 (巾W) × 8.0 (高さH)	7.0 (巾W) × 10.5 (高さH)	7.0 (巾W) × 11.0 (高さH)
SMT TYPE	H TYPE ポス無 WITHOUT BOSS X-176893-X / ポス付 WITH BOSS X-176490-X	5.6 (巾W) × 9.9 (高さH)	7.0 (巾W) × 12.4 (高さH)	7.0 (巾W) × 12.9 (高さH)

TABLE 1 SMT TYPEは、巾及び高さ寸法に
SMT TYPE INCLUDE DIMENSIONS
半田付タイン部寸法を含みます。
OF SOLDER DIP TINE.

2 基板位置決め用ボス切断跡。
CUT MAKE OF MOUNTING BOSS.

3 OBSOLETE PARTS: OBSOLETE CIS STREAMLINING
PER D.RENAUD/D.SINISI

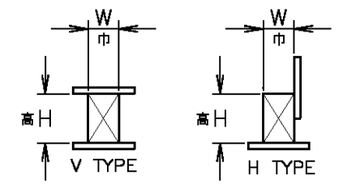

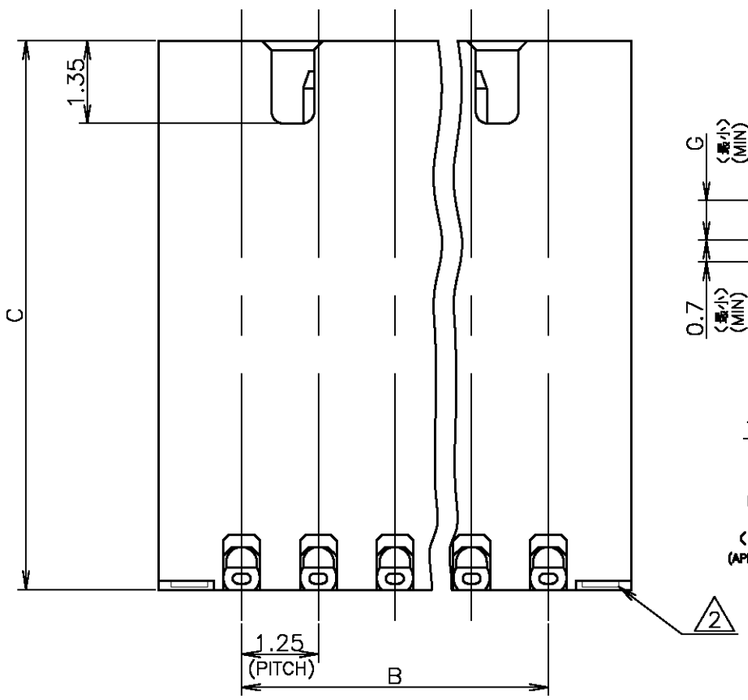

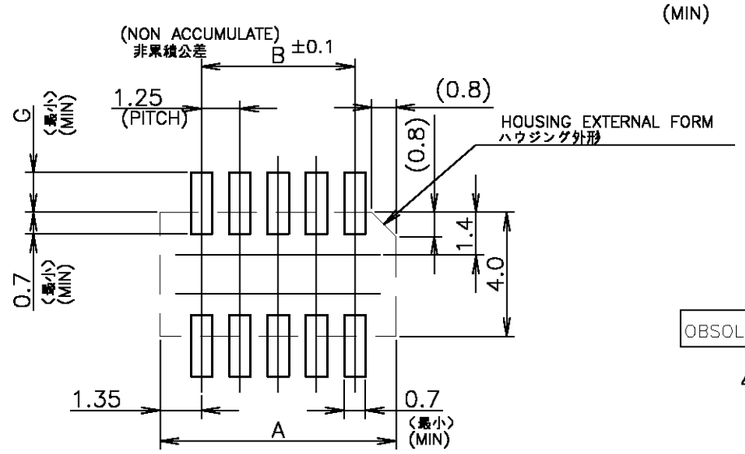

P.C.B MOUNTING LAYUOUT
基板加工寸法
(適用基板厚: 0.6mm 最小)
(APPLICABLE P.C.B THK: 0.6mm MIN)

OBSOLETE										
3						6.85	17.00	17.70	26	8– –6
		~~1.0~~	~~2.0~~	~~1.5~~	~~7.0~~	~~9.35~~	~~12.50~~	~~15.20~~	~~22~~	~~5– –2~~
	黒色 BLACK	0.4	1.3	0.8	5.6	6.85	13.75	16.45	24	2-178041-4
	色別 COLOR	H	G	F	E	C	B	A	極数 POS.	型番 P/N
		寸法 DIMENSIONS								

THIS DRAWING IS A CONTROLLED DOCUMENT.

DIMENSIONS: 単位: 粍 mm

TOLERANCES UNLESS OTHERWISE SPECIFIED: 一般公差
0 PLC ±
1 PLC ±
2 PLC ±
3 PLC ±
4 PLC ±
ANGLES ±
10以下 ±0.2
10を超え 30以下 ±0.25
30を超え100以下 ±0.3
角度 ±3°

MATERIAL 材料: AS SHOWN 図中参照
FINISH 仕上: AS SHOWN 図中参照

DWN	S.KANEKI	06NOV1990
CHK	J.TANIGAWA	06NOV1990
APVD	S.KIKUCHI	06NOV1990
PRODUCT SPEC 製品規格	108-5246	
APPLICATION SPEC 取付適用規格		
WEIGHT		

TE Connectivity

NAME 名称: 1.25 F-P CONNECTOR, B-TO-B DOUBLE ROW POST HDR ASSY H TYPE WITHOUT BOSS -IMPROVED TYPE

SIZE	CAGE CODE	DRAWING NO 番号	RESTRICTED TO
A3	00779	C-178041	—

CUSTOMER DRAWING | SCALE 尺度 10:1 | SHEET 1 OF 1 | REV D