MICRO SWITCH
a Honeywell Division
FED. MFG. CODE 91929

ASSEMBLY - TOGGLE SWITCH

CATALOG LISTING
32AT501

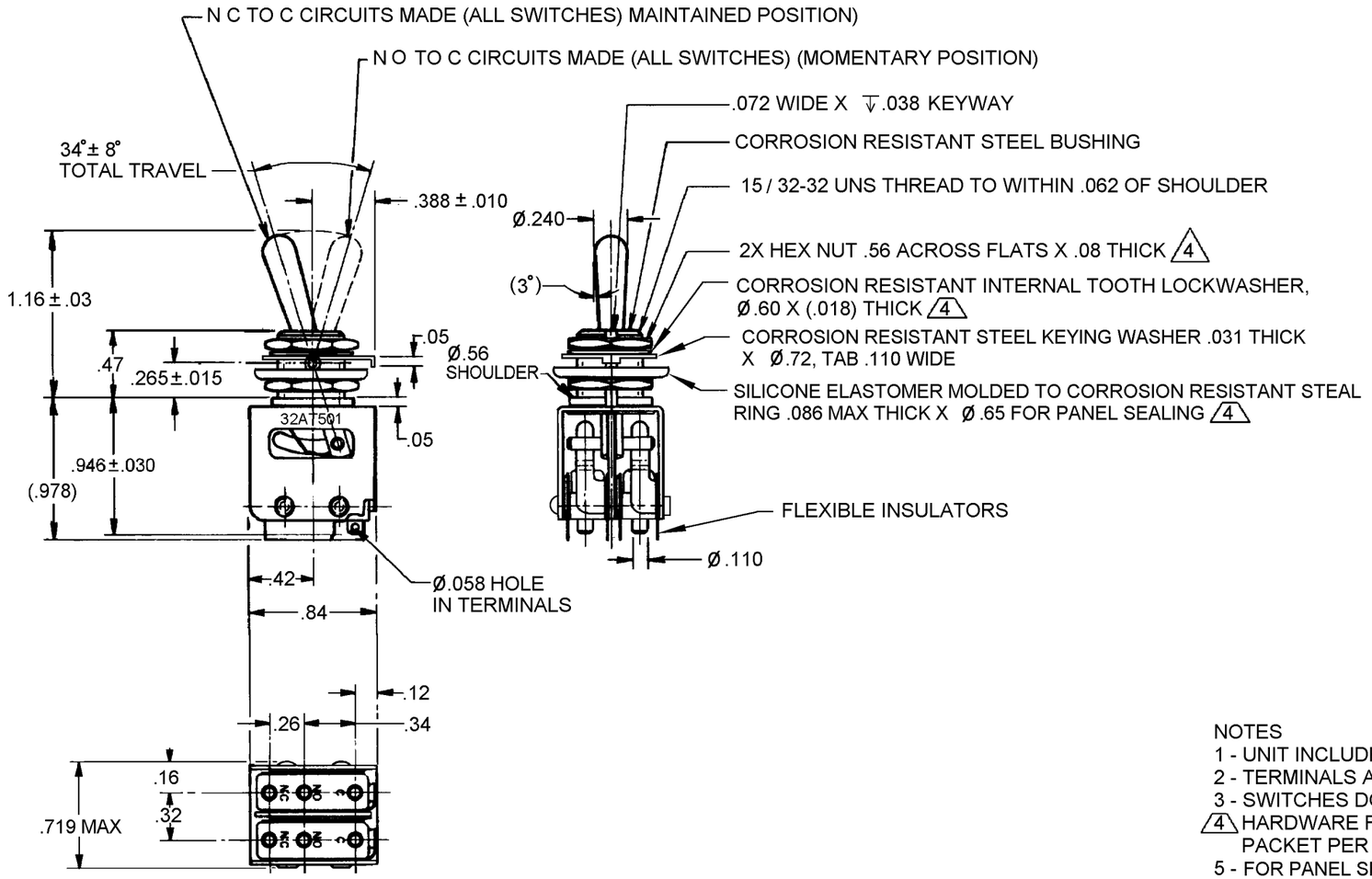

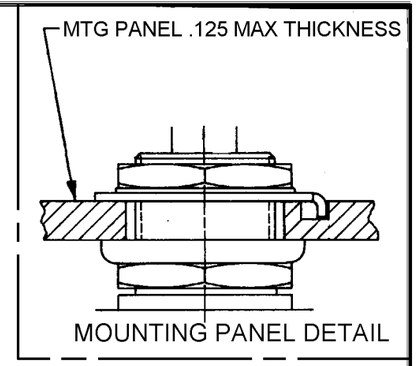

NOTES
1 - UNIT INCLUDES 2X CATALOG LISTING 11SM23 BASIC SWITCH
2 - TERMINALS ARE PLATED FOR SOLDERING
3 - SWITCHES DO NOT NECESSARILY OPERATE SIMULTANEOUSLY
4 HARDWARE FURNISHED ASSEMBLED WITH SWITCH OR IN PACKET PER MIL-PRF-8805
5 - FOR PANEL SEAL TO BE EFFECTIVE MOUNTING HOLE IN PANEL SHOULD NOT EXCEED .500 DIAMETER

THIS DRAWING COVERS A PROPRIETARY ITEM AND IS THE PROPERTY OF MICRO SWITCH. A DIVISION OF HONEYWELL. THIS DRAWING IS NOT TO BE COPIED OR USED WITHOUT THE APPROVAL OF MICRO SWITCH

THIRD ANGLE PROJECTION

SCALE FULL

DO NOT SCALE PRINT

UNLESS OTHERWISE SPECIFIED TOLERANCES ARE

ONE PLACE	(.0)	±.030
TWO PLACE	(.00)	±.015
THREE PLACE	(.000)	±.005
ANGLES		±

WEIGHT .06 LB

CHARACTERISTICS

ELECTRICAL DATA

CONTACT ARRANGEMENT
4X S P D T

30 VOLTS DC RATING
INDUCTIVE — — — — SEA LEVEL — — — - 1/2 AMP
50,000 FT — — — — 1/2 AMP
RESISTIVE — — — — - SEA LEVEL — — — — -1 AMP
50,000 FT — — — — — 1 AMP
MAXIMUM INRUSH — — — — — — — — — — 2 AMP

ANSI Y14.5M-1982 APPLIES

32AT501
CATALOG LISTING
PAGE 1 OF 1
RELEASE NO. 0001219
REPLACES
ISSUE A
CHECK
REVISIONS
CHECK
26 AUG 03
CHECK S A V
CHECK
26 AUG 03
DRAWN C S L
RASTER