GENERAL DESCRIPTION

AVX's new mini-ceramic capacitor (MC02) is only 0.040" thick by 0.050" wide by 0.100" long, the same size as AVX's MINITAN (TMH Series) "W" case size. This allows the lower value ceramic multilayer capacitors to fit into the same designs as the AVX tantalum capacitor's "W" size. It uses the same solder coated pure nickel lead wire suitable for either soldering or welding.

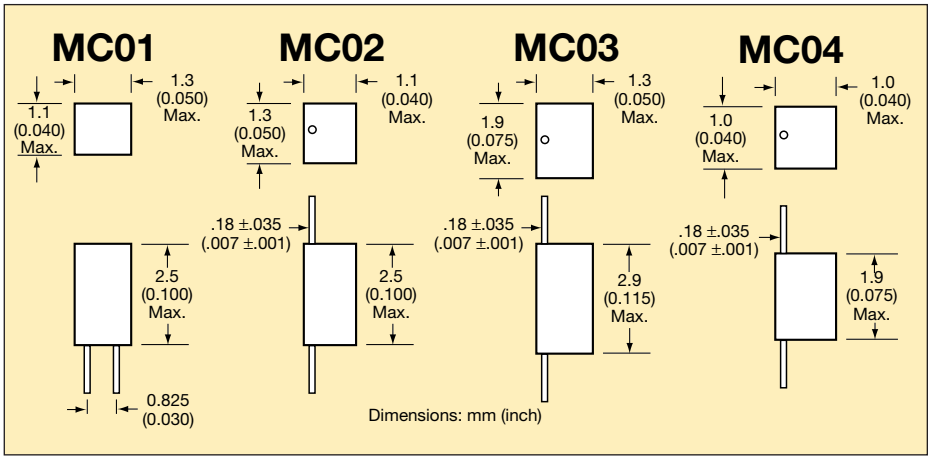

HOW TO ORDER

AVX Style: MC02
Part Number Example

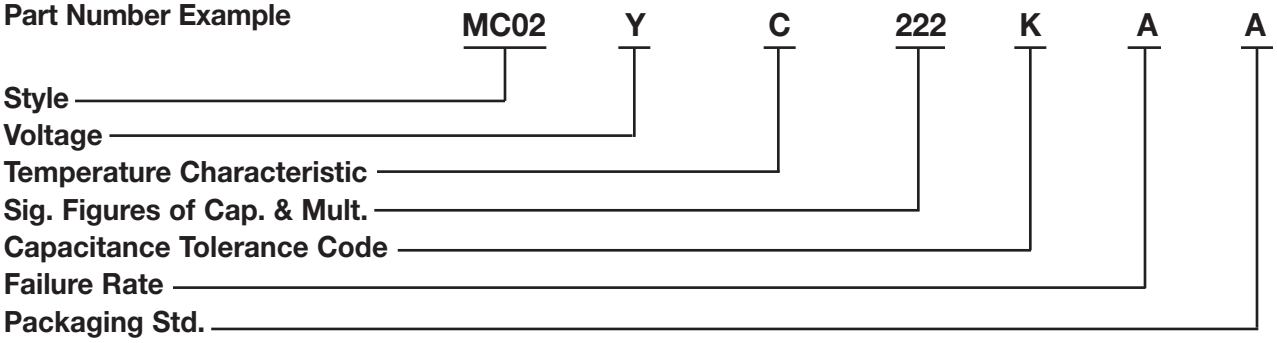

Part Number Codes

Voltages: 6.3V = 6, 16V = Y, 10V = Z

Dielectric: X7R = C, Y5V = G

Sig. Figures of Capacitance and Multiplier: First two digits are the significant figures of capacitance. Third digit indicates the additional number of zeros. For example, order 100,000 pF as 104. (For values below 10 pF, use "R" in place of decimal point, e.g., 1R4 = 1.4 pF.)

Capacitance Tolerances:
X7R: J = ±5%, K = ±10%, M = ±20%

Failure Rate: Not Applicable

Packaging Standard:
100 pieces per bag

Capacitance Specifications

Cap. in pF	Typical AVX Part Nos.
MC01	
1000	*MC01YC102KAR*
1500	MC01YC152KAR
2200	MC01YC222KAR
3300	MC01YC332KAR
4700	MC01YC472KAR
5600	MC01YC562KAR
6800	MC01YC682KAR
8200	MC01YC822KAR
10,000	*MC01YC103KAR*
15,000	MC01YC153KAR
22,000	MC01YC223KAR
33,000	MC016C333KAR
47,000	MC016C473KAR
68,000	MC016C683KAR
100,000	MC016C104KAR

Cap. in pF	Typical AVX Part Nos.
MC02	
1000	*MC02YC102KAA*
1500	MC02YC152KAA
2200	MC02YC222KAA
3300	MC02YC332KAA
4700	MC02YC472KAA
5600	MC02YC562KAA
6800	MC02YC682KAA
8200	MC02YC822KAA
10,000	*MC02YC103KAA*
15,000	MC02YC153KAA
22,000	MC02YC223KAA
33,000	MC02YC333KAA
47,000	MC02YC473KAA
68,000	MC02YC683KAA
100,000	MC02YC104KAA
150,000	MC026C154KAA
220,000	MC026C224KAA
470,000	MC026C474KAA
1,000,000	MC026C105KAA

Cap. in pF	Typical AVX Part Nos.		
MC03			
µF	**X7R**	**µF**	**Y5V**
.33	MC03ZC334KAA	2.2	MC03ZG225ZAA
.47	MC03ZC474KAA		
1.0	MC03ZC105KAA		
1.0	MC03YC105KAA		

Cap. in pF	Typical AVX Part Nos.
MC04	
1000	*MC04YC102KAA*
1500	MC04YC152KAA
2200	MC04YC222KAA
3300	MC04YC332KAA
4700	MC04YC472KAA
5600	MC04YC562KAA
6800	MC04YC682KAA
8200	MC04YC822KAA
10,000	*MC04YC103KAA*
15,000	MC04YC153KAA
22,000	MC04YC223KAA
33,000	MC046C333KAA
47,000	MC046C473KAA
68,000	MC046C683KAA
100,000	MC046C104KAA

MARKING

Three digit Capacitance Code

Color coded Capacitance Tolerance:
±5% = Gold Dot
±10% = Silver Dot