THIS DRAWING IS UNPUBLISHED. RELEASED FOR PUBLICATION -.- .
© COPYRIGHT - By - ALL RIGHTS RESERVED.

LOC	DIST
GP	00

REVISIONS

P	LTR	DESCRIPTION	DATE	DWN	APVD
	U2	REVISED PER ECO-11-004835	11MAR11	RK	HMR

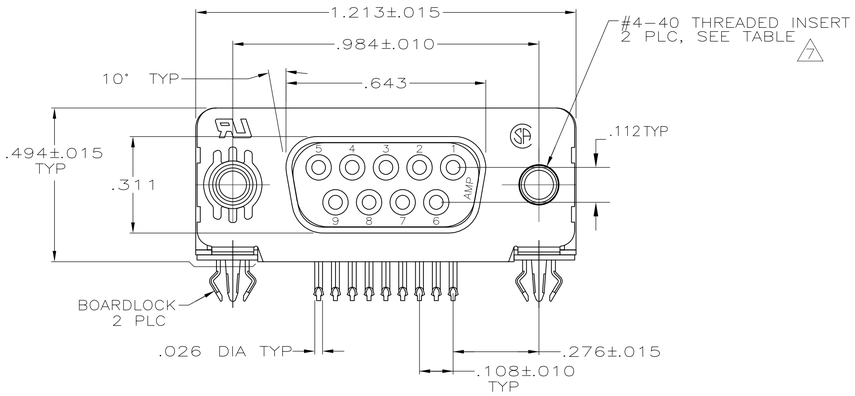

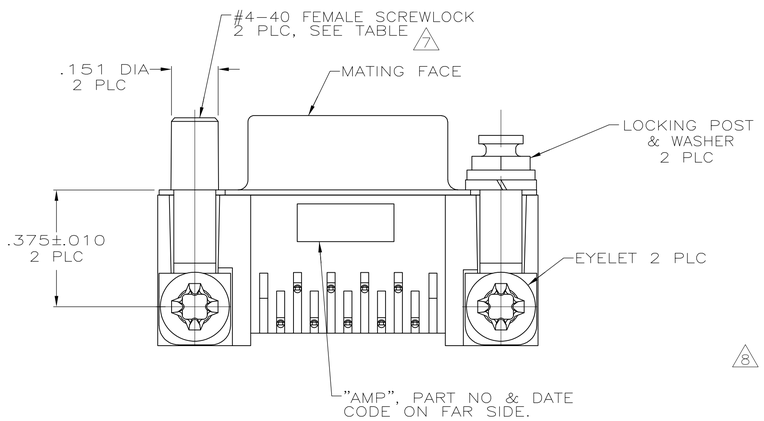

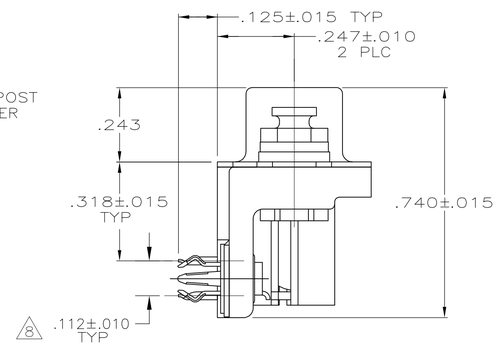

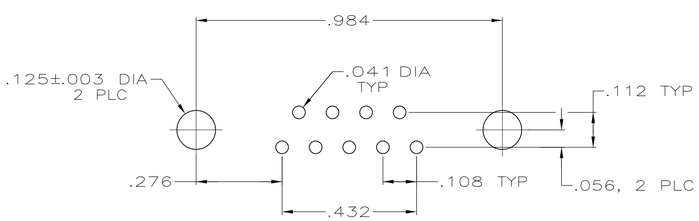

PC BOARD MOUNTING DIMENSIONS

1. CONNECTOR MATES WITH ANY 9 POSN PLUG IN AMPLIMITE™ SERIES.

2. MOLDED PARTS: FLAME RETARDANT 94V-0 RATED THERMOPLASTIC, BLACK.
SHELL: STEEL PER ASTM A109
CONTACTS: PHOSPHOR BRONZE PER QQ-B-750
EYELETS: BRASS
SCREWLOCKS: ZINC
INSERTS: ZINC
BOARDLOCKS: COPPER ALLOY

3. SHELL: .000100 MIN TIN OR TIN-LEAD
CONTACTS: SEE TABLE
EYELETS: TIN
SCREWLOCKS: CLEAR CHROMATE
BOARDLOCKS: SEE TABLE
INSERTS: CLEAR CHROMATE

4. GOLD PLATING PER MIL-G-45204, NICKEL PLATING PER QQ-N-290, TIN PLATING PER MIL-T-10727.

5. GOLD FLASH FOR A DISTANCE OF .100 MIN FROM MATING END, .000100-.000200 BRIGHT TIN OR BRIGHT TIN-LEAD ON TERMINATION END, ALL OVER .000050 NICKEL ON ENTIRE CONTACT.

6. .000030 GOLD FOR A DISTANCE OF .100 MIN FROM MATING END, .000100-.000200 BRIGHT TIN OR BRIGHT TIN-LEAD ON TERMINATION END, ALL OVER .000050 NICKEL ON ENTIRE CONTACT.

7. SCREWLOCKS & INSERTS WILL WITHSTAND 4 IN LBS TORQUE & 20 LBS PULL OUT FORCE FROM MATING FACE SIDE.

8. DIMENSION APPLIES TO CENTER LINE OF CONTACTS.

9. OBSOLETE PARTS: OBSOLETE CIS STREAMLINING PER D.RENAUD/D.SINISI

	PACKAGING	MOUNTING HARDWARE	BOARDLOCK FINISH	CONTACT FINISH 4	PART NUMBER
	–	FEMALE SCREWLOCKS	TIN	6	7-747844-1
	–	FEMALE SCREWLOCKS	TIN	5	7-747844-0
	TRAY	THREADED INSERTS	TIN	6	6-747844-9
	–	THREADED INSERTS	TIN	5	6-747844-8
9 OBSOLETE	–	.125 DIA HOLES	TIN	6	~~6-747844-7~~
SUPSD BY 747844-4	TUBE	THREADED INSERTS	TIN-LEAD	6	747844-8
SUPSD BY 747844-4	–	INSERT/LOCKING POST & WASHERS	TIN-LEAD	6	747844-7
	–	FEMALE SCREWLOCKS	TIN-LEAD	6	747844-6
	–	FEMALE SCREWLOCKS	TIN-LEAD	5	747844-5
	TRAY	THREADED INSERTS	TIN-LEAD	6	747844-4
	–	THREADED INSERTS	TIN-LEAD	5	747844-3
	–	.125 DIA HOLES	TIN-LEAD	6	747844-2
SUPSD BY 747844-2	–	.125 DIA HOLES	TIN-LEAD	5	747844-1

THIS DRAWING IS A CONTROLLED DOCUMENT.

DIMENSIONS: INCHES

TOLERANCES UNLESS OTHERWISE SPECIFIED:
0 PLC ± –
1 PLC ± –
2 PLC ± –
3 PLC ± .005
4 PLC ± .–
ANGLES 2° ± –

MATERIAL 2 | FINISH 3

DWN J. GALLUCCI BG 28 JAN 91
CHK W.G. LENKER 15 APR 91
APVD J. YOUNG 15 APR 91
PRODUCT SPEC 108-40025
APPLICATION SPEC 114-40010
WEIGHT –

TE Connectivity

NAME RECEPTACLE ASSEMBLY, SIZE 1, RIGHT ANGLE, .318 SERIES, FRONT METAL SHELL, .026 DIA POSTS, BOARDLOCKS, AMPLIMITE™ HD-20

SIZE	CAGE CODE	DRAWING NO	RESTRICTED TO
A1	00779	C-747844	–

CUSTOMER DRAWING | SCALE 4:1 | SHEET 1 OF 1 | REV U2

4805 (3/11)