PART NUMBER	ENGINEERING NUMBER	DIMENSION "A"	BUSBAR OPTION	DAMBAR OPTION	PLATING	
					CONTACT AREA	TAIL AREA
051-24-2021	70984-1001	N/A	NO	NO	.000030/(0.00076) MINIMUM GOLD OVER A NICKEL UNDERPLATE	.000100/(0.00254) MINIMUM TIN OVER A NICKEL UNDERPLATE
051-24-2022	70984-1002	.130±.010	NO	NO	.000030/(0.00076) MINIMUM GOLD OVER A NICKEL UNDERPLATE	.000100/(0.00254) MINIMUM TIN OVER A NICKEL UNDERPLATE
70984-1007		N/A	YES	NO	.000030/(0.00076) MINIMUM GOLD OVER A NICKEL UNDERPLATE	.000050/0.00127) MINIMUM NICKEL
70984-1010		N/A	YES	NO	.000030/(0.00076) MINIMUM GOLD OVER A NICKEL UNDERPLATE	.000200/(0.00508) MINIMUM TIN OVER A NICKEL UNDERPLATE
70984-1014		.130±.010	NO	NO	GOLD FLASH OVER A NICKEL UNDERPLATE	.000100/(0.00254) MINIMUM TIN OVER A NICKEL UNDERPLATE
70984-1005		N/A	YES	YES	.000030/(0.00076) MINIMUM GOLD OVER A NICKEL UNDERPLATE	.000050/(0.00127) MINIMUM NICKEL
70984-1008		N/A	YES	YES	.000030/(0.00076) MINIMUM GOLD OVER A NICKEL UNDERPLATE	.000200/(0.00508) MINIMUM TIN OVER A NICKEL UNDERPLATE
70984-1100		N/A	NO	YES	.000030/(0.00076) MINIMUM GOLD OVER A NICKEL UNDERPLATE	.000100/(0.00254) MINIMUM TIN OVER A NICKEL UNDERPLATE
70984-1013		.130±.010	YES	NO	.000030/(0.00076) MINIMUM GOLD OVER A NICKEL UNDERPLATE	.000050/(0.00127) MINIMUM NICKEL

SEE TABLE FOR BUSBAR AND DAMBAR PART #'S

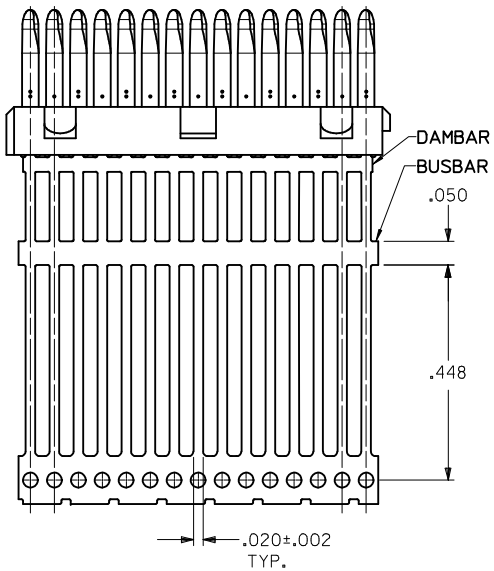

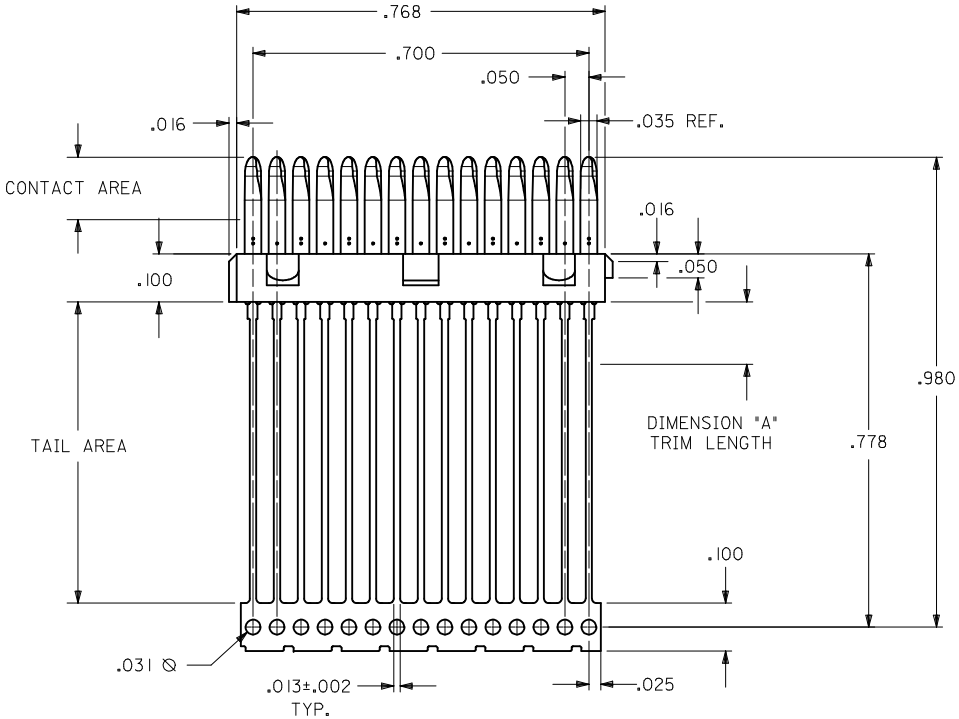

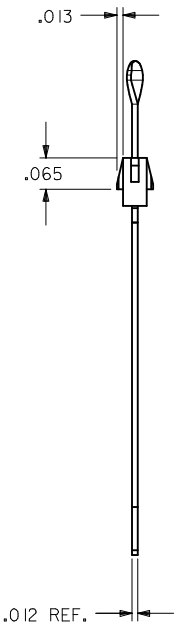

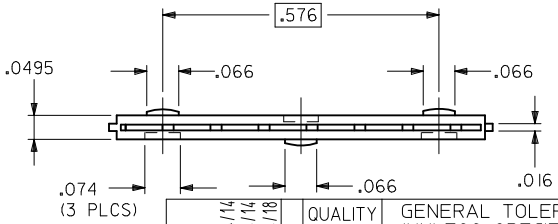

NOTES:

1) MATERIALS: INSULATOR - GLASS FILLED LIQUID CRYSTAL POLYMER (LCP), UL 94V-0, COLOR - BLACK
TERMINAL - PHOSPHOR BRONZE, .012 THICK.

2) FOR PART NUMBERS AND PLATING OPTIONS, SEE CHART.

3) PARTS CONFORM TO PRODUCT SPECIFICATION PS-70928.

4) PACKAGED PER PK-70873-0335 EXCEPT 70984-1100, PACKAGE PER PK-70873-0351.

5) PART COMPLIES WITH CLASS C OF COSMETIC SPECIFICATION PS-45499-002.

PRINT ERROR -1014
EC NO: UCP2014-4242 2014/04/14
DRWN:DMORGAN 2014/04/14
CH'KD:MPOFF 2014/04/18
APPR:SMILLER
DESCRIPTION
REV H

QUALITY SYMBOLS
E =0
E =0
E =0

GENERAL TOLERANCES (UNLESS SPECIFIED)

	mm	INCH
4 PLACES	± ---	± ---
3 PLACES	± 0.01	± ---
2 PLACES	± ---	± ---
1 PLACE	± ---	± ---
0 PLACE	± ---	± ---
ANGULAR ±1/2°		

DRAFT WHERE APPLICABLE MUST REMAIN WITHIN DIMENSIONS

DIMENSION STYLE: INCH ONLY
SCALE
DESIGN UNITS: INCH
THIRD ANGLE PROJECTION

DRAWN BY	SCHMIDGALL	DATE 07/12/1993
CHECKED BY	MOS	DATE 07/12/1993
APPROVED BY	CAB	DATE 07/12/1993

TITLE: 15 CKT LFH PLUG INSERT MOLDED CONTACT ASSEMBLY - MANUFACTURING

molex

MATERIAL NO.: SEE TABLE
DOCUMENT NO.: SDA-70984-100
SHEET NO.: 1 OF 1
SIZE: C

THIS DRAWING CONTAINS INFORMATION THAT IS PROPRIETARY TO MOLEX INCORPORATED AND SHOULD NOT BE USED WITHOUT WRITTEN PERMISSION