74AUP1G373

Low-power D-type transparent latch; 3-state

Rev. 6 — 4 July 2012 Product data sheet

1. General description

The 74AUP1G373 provides the single D-type transparent latch with 3-state output. While the latch-enable (LE) input is high, the Q output follows the data (D) input. When pin LE is LOW, the latch stores the information that was present at the D-input one set-up time preceding the HIGH-to-LOW transition of pin LE. When pin $\overline{OE}$ is LOW, the contents of the latch is available at the (Q) output. When pin $\overline{OE}$ is HIGH, the output goes to the high-impedance OFF-state. Operation of input pin $\overline{OE}$ does not affect the state of the latch.

Schmitt trigger action at all inputs makes the circuit tolerant to slower input rise and fall times across the entire V_{CC} range from 0.8 V to 3.6 V.

This device ensures a very low static and dynamic power consumption across the entire V_{CC} range from 0.8 V to 3.6 V.

This device is fully specified for partial power-down applications using I_{OFF}.
The I_{OFF} circuitry disables the output, preventing the damaging backflow current through the device when it is powered down.

2. Features and benefits

- Wide supply voltage range from 0.8 V to 3.6 V
- High noise immunity
- Complies with JEDEC standards:
  - JESD8-12 (0.8 V to 1.3 V)
  - JESD8-11 (0.9 V to 1.65 V)
  - JESD8-7 (1.2 V to 1.95 V)
  - JESD8-5 (1.8 V to 2.7 V)
  - JESD8-B (2.7 V to 3.6 V)
- ESD protection:
  - HBM JESD22-A114F Class 3A exceeds 5000 V
  - MM JESD22-A115-A exceeds 200 V
  - CDM JESD22-C101E exceeds 1000 V
- Low static power consumption; I_{CC} = 0.9 μA (maximum)
- Latch-up performance exceeds 100 mA per JESD 78 Class II
- Inputs accept voltages up to 3.6 V
- Low noise overshoot and undershoot < 10 % of V_{CC}
- I_{OFF} circuitry provides partial Power-down mode operation
- Multiple package options
- Specified from −40 °C to +85 °C and −40 °C to +125 °C

3. Ordering information

Table 1. Ordering information

Type number	Package			
	Temperature range	Name	Description	Version
74AUP1G373GW	–40 °C to +125 °C	SC-88	plastic surface-mounted package; 6 leads	SOT363
74AUP1G373GM	–40 °C to +125 °C	XSON6	plastic extremely thin small outline package; no leads; 6 terminals; body 1 × 1.45 × 0.5 mm	SOT886
74AUP1G373GF	–40 °C to +125 °C	XSON6	plastic extremely thin small outline package; no leads; 6 terminals; body 1 × 1 × 0.5 mm	SOT891
74AUP1G373GN	–40 °C to +125 °C	XSON6	extremely thin small outline package; no leads; 6 terminals; body 0.9 × 1.0 × 0.35 mm	SOT1115
74AUP1G373GS	–40 °C to +125 °C	XSON6	extremely thin small outline package; no leads; 6 terminals; body 1.0 × 1.0 × 0.35 mm	SOT1202

4. Marking

Table 2. Marking

Type number	Marking code[1]
74AUP1G373GW	aW
74AUP1G373GM	aW
74AUP1G373GF	aW
74AUP1G373GN	aW
74AUP1G373GS	aW

[1] The pin 1 indicator is located on the lower left corner of the device, below the marking code.

5. Functional diagram

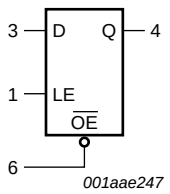

Fig 1. Logic symbol

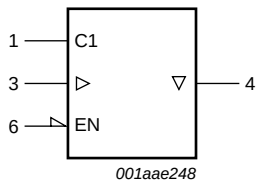

Fig 2. IEC logic symbol

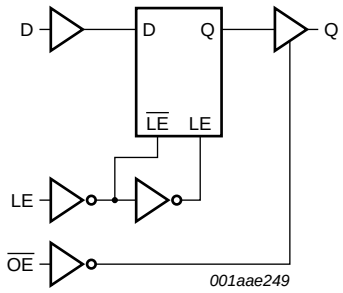

Fig 3. Logic diagram

All information provided in this document is subject to legal disclaimers.

© NXP B.V. 2012. All rights reserved.

6. Pinning information

6.1 Pinning

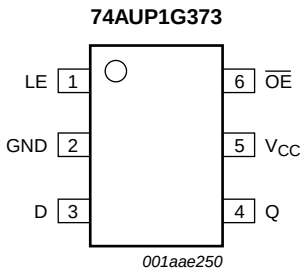

Fig 4. Pin configuration SOT363

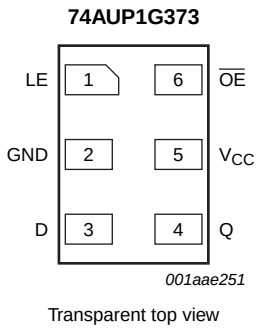

Fig 5. Pin configuration SOT886

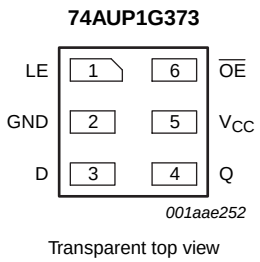

Fig 6. Pin configuration SOT891, SOT1115 and SOT1202

6.2 Pin description

Table 3. Pin description

Symbol	Pin	Description
LE	1	latch enable input (active HIGH)
GND	2	ground (0 V)
D	3	data input
Q	4	latch output
V_{CC}	5	supply voltage
$\overline{OE}$	6	output enable input (active LOW)

7. Functional description

Table 4. Function table[1]

Operating modes	Input			Internal latch	Output
	$\overline{OE}$	LE	D		Q
Enable and read register (transparent mode)	L	H	L	L	L
	L	H	H	H	H
Latch and read register	L	L	l	L	L
	L	L	h	H	H
Latch register and disable outputs	H	X	X	X	Z

[1] H = HIGH voltage level;
h = HIGH voltage level one setup time prior to the HIGH-to-LOW LE transition;
L = LOW voltage level;
l = LOW voltage level one setup time prior to the HIGH-to-LOW LE transition;
X = Don't care;
Z = high-impedance OFF-state.

All information provided in this document is subject to legal disclaimers.

© NXP B.V. 2012. All rights reserved.

8. Limiting values

Table 5. Limiting values

In accordance with the Absolute Maximum Rating System (IEC 60134). Voltages are referenced to GND (ground = 0 V).

Symbol	Parameter	Conditions		Min	Max	Unit
V_{CC}	supply voltage			–0.5	+4.6	V
I_{IK}	input clamping current	V_I < 0 V		–50	-	mA
V_I	input voltage		[1]	–0.5	+4.6	V
I_{OK}	output clamping current	V_O < 0 V		–50	-	mA
V_O	output voltage	Active mode and Power-down mode	[1]	–0.5	+4.6	V
I_O	output current	V_O = 0 V to V_{CC}		-	±20	mA
I_{CC}	supply current			-	50	mA
I_{GND}	ground current			–50	-	mA
T_{stg}	storage temperature			–65	+150	°C
P_{tot}	total power dissipation	T_{amb} = –40 °C to +125 °C	[2]	-	250	mW

[1] The input and output voltage ratings may be exceeded if the input and output current ratings are observed.

[2] For SC-88 packages: above 87.5 °C the value of P_{tot} derates linearly with 4.0 mW/K.
For XSON6 packages: above 118 °C the value of P_{tot} derates linearly with 7.8 mW/K.

9. Recommended operating conditions

Table 6. Recommended operating conditions

Symbol	Parameter	Conditions	Min	Max	Unit
V_{CC}	supply voltage		0.8	3.6	V
V_I	input voltage		0	3.6	V
V_O	output voltage	Active mode	0	V_{CC}	V
		Power-down mode; V_{CC} = 0 V	0	3.6	V
T_{amb}	ambient temperature		–40	+125	°C
$\Delta t/\Delta V$	input transition rise and fall rate	V_{CC} = 0.8 V to 3.6 V	-	200	ns/V

10. Static characteristics

Table 7. Static characteristics

At recommended operating conditions; voltages are referenced to GND (ground = 0 V).

Symbol	Parameter	Conditions	Min	Typ	Max	Unit
T_{amb} = 25 °C						
V_{IH}	HIGH-level input voltage	V_{CC} = 0.8 V	0.70 × V_{CC}	-	-	V
		V_{CC} = 0.9 V to 1.95 V	0.65 × V_{CC}	-	-	V
		V_{CC} = 2.3 V to 2.7 V	1.6	-	-	V
		V_{CC} = 3.0 V to 3.6 V	2.0	-	-	V
V_{IL}	LOW-level input voltage	V_{CC} = 0.8 V	-	-	0.30 × V_{CC}	V
		V_{CC} = 0.9 V to 1.95 V	-	-	0.35 × V_{CC}	V
		V_{CC} = 2.3 V to 2.7 V	-	-	0.7	V
		V_{CC} = 3.0 V to 3.6 V	-	-	0.9	V

All information provided in this document is subject to legal disclaimers.

© NXP B.V. 2012. All rights reserved.

Table 7. Static characteristics *...continued*

At recommended operating conditions; voltages are referenced to GND (ground = 0 V).

Symbol	Parameter	Conditions		Min	Typ	Max	Unit
V_{OH}	HIGH-level output voltage	$V_I = V_{IH}$ or V_{IL}					
		$I_O = -20\ \mu A$; $V_{CC} = 0.8$ V to 3.6 V		$V_{CC} - 0.1$	-	-	V
		$I_O = -1.1$ mA; $V_{CC} = 1.1$ V		$0.75 \times V_{CC}$	-	-	V
		$I_O = -1.7$ mA; $V_{CC} = 1.4$ V		1.11	-	-	V
		$I_O = -1.9$ mA; $V_{CC} = 1.65$ V		1.32	-	-	V
		$I_O = -2.3$ mA; $V_{CC} = 2.3$ V		2.05	-	-	V
		$I_O = -3.1$ mA; $V_{CC} = 2.3$ V		1.9	-	-	V
		$I_O = -2.7$ mA; $V_{CC} = 3.0$ V		2.72	-	-	V
		$I_O = -4.0$ mA; $V_{CC} = 3.0$ V		2.6	-	-	V
V_{OL}	LOW-level output voltage	$V_I = V_{IH}$ or V_{IL}					
		$I_O = 20\ \mu A$; $V_{CC} = 0.8$ V to 3.6 V		-	-	0.1	V
		$I_O = 1.1$ mA; $V_{CC} = 1.1$ V		-	-	$0.3 \times V_{CC}$	V
		$I_O = 1.7$ mA; $V_{CC} = 1.4$ V		-	-	0.31	V
		$I_O = 1.9$ mA; $V_{CC} = 1.65$ V		-	-	0.31	V
		$I_O = 2.3$ mA; $V_{CC} = 2.3$ V		-	-	0.31	V
		$I_O = 3.1$ mA; $V_{CC} = 2.3$ V		-	-	0.44	V
		$I_O = 2.7$ mA; $V_{CC} = 3.0$ V		-	-	0.31	V
		$I_O = 4.0$ mA; $V_{CC} = 3.0$ V		-	-	0.44	V
I_I	input leakage current	V_I = GND to 3.6 V; $V_{CC} = 0$ V to 3.6 V		-	-	±0.1	μA
I_{OZ}	OFF-state output current	$V_I = V_{IH}$ or V_{IL}; $V_O = 0$ V to 3.6 V; $V_{CC} = 0$ V to 3.6 V		-	-	±0.1	μA
I_{OFF}	power-off leakage current	V_I or $V_O = 0$ V to 3.6 V; $V_{CC} = 0$ V		-	-	±0.2	μA
ΔI_{OFF}	additional power-off leakage current	V_I or $V_O = 0$ V to 3.6 V; $V_{CC} = 0$ V to 0.2 V		-	-	±0.2	μA
I_{CC}	supply current	V_I = GND or V_{CC}; $I_O = 0$ A; $V_{CC} = 0.8$ V to 3.6 V		-	-	0.5	μA
ΔI_{CC}	additional supply current	$V_I = V_{CC} - 0.6$ V; $I_O = 0$ A; $V_{CC} = 3.3$ V	[1]	-	-	40	μA
C_I	input capacitance	$V_{CC} = 0$ V to 3.6 V; V_I = GND or V_{CC}		-	0.8	-	pF
C_O	output capacitance	output enabled; V_O = GND; $V_{CC} = 0$ V		-	1.7	-	pF
		output disabled; $V_{CC} = 0$ V to 3.6 V; V_O = GND or V_{CC}		-	1.5	-	pF
$T_{amb} = -40$ °C to +85 °C							
V_{IH}	HIGH-level input voltage	$V_{CC} = 0.8$ V		$0.70 \times V_{CC}$	-	-	V
		$V_{CC} = 0.9$ V to 1.95 V		$0.65 \times V_{CC}$	-	-	V
		$V_{CC} = 2.3$ V to 2.7 V		1.6	-	-	V
		$V_{CC} = 3.0$ V to 3.6 V		2.0	-	-	V
V_{IL}	LOW-level input voltage	$V_{CC} = 0.8$ V		-	-	$0.30 \times V_{CC}$	V
		$V_{CC} = 0.9$ V to 1.95 V		-	-	$0.35 \times V_{CC}$	V
		$V_{CC} = 2.3$ V to 2.7 V		-	-	0.7	V
		$V_{CC} = 3.0$ V to 3.6 V		-	-	0.9	V

All information provided in this document is subject to legal disclaimers.

© NXP B.V. 2012. All rights reserved.

Table 7. Static characteristics *...continued*

At recommended operating conditions; voltages are referenced to GND (ground = 0 V).

Symbol	Parameter	Conditions		Min	Typ	Max	Unit
V_{OH}	HIGH-level output voltage	$V_I = V_{IH}$ or V_{IL}					
		$I_O = -20\ \mu A$; $V_{CC} = 0.8$ V to 3.6 V		$V_{CC} - 0.1$	-	-	V
		$I_O = -1.1$ mA; $V_{CC} = 1.1$ V		$0.7 \times V_{CC}$	-	-	V
		$I_O = -1.7$ mA; $V_{CC} = 1.4$ V		1.03	-	-	V
		$I_O = -1.9$ mA; $V_{CC} = 1.65$ V		1.30	-	-	V
		$I_O = -2.3$ mA; $V_{CC} = 2.3$ V		1.97	-	-	V
		$I_O = -3.1$ mA; $V_{CC} = 2.3$ V		1.85	-	-	V
		$I_O = -2.7$ mA; $V_{CC} = 3.0$ V		2.67	-	-	V
		$I_O = -4.0$ mA; $V_{CC} = 3.0$ V		2.55	-	-	V
V_{OL}	LOW-level output voltage	$V_I = V_{IH}$ or V_{IL}					
		$I_O = 20\ \mu A$; $V_{CC} = 0.8$ V to 3.6 V		-	-	0.1	V
		$I_O = 1.1$ mA; $V_{CC} = 1.1$ V		-	-	$0.3 \times V_{CC}$	V
		$I_O = 1.7$ mA; $V_{CC} = 1.4$ V		-	-	0.37	V
		$I_O = 1.9$ mA; $V_{CC} = 1.65$ V		-	-	0.35	V
		$I_O = 2.3$ mA; $V_{CC} = 2.3$ V		-	-	0.33	V
		$I_O = 3.1$ mA; $V_{CC} = 2.3$ V		-	-	0.45	V
		$I_O = 2.7$ mA; $V_{CC} = 3.0$ V		-	-	0.33	V
		$I_O = 4.0$ mA; $V_{CC} = 3.0$ V		-	-	0.45	V
I_I	input leakage current	V_I = GND to 3.6 V; $V_{CC} = 0$ V to 3.6 V		-	-	±0.5	μA
I_{OZ}	OFF-state output current	$V_I = V_{IH}$ or V_{IL}; $V_O = 0$ V to 3.6 V; $V_{CC} = 0$ V to 3.6 V		-	-	±0.5	μA
I_{OFF}	power-off leakage current	V_I or $V_O = 0$ V to 3.6 V; $V_{CC} = 0$ V		-	-	±0.5	μA
ΔI_{OFF}	additional power-off leakage current	V_I or $V_O = 0$ V to 3.6 V; $V_{CC} = 0$ V to 0.2 V		-	-	±0.6	μA
I_{CC}	supply current	V_I = GND or V_{CC}; $I_O = 0$ A; $V_{CC} = 0.8$ V to 3.6 V		-	-	0.9	μA
ΔI_{CC}	additional supply current	$V_I = V_{CC} - 0.6$ V; $I_O = 0$ A; $V_{CC} = 3.3$ V	[1]	-	-	50	μA
T_{amb} = –40 °C to +125 °C							
V_{IH}	HIGH-level input voltage	$V_{CC} = 0.8$ V		$0.75 \times V_{CC}$	-	-	V
		$V_{CC} = 0.9$ V to 1.95 V		$0.70 \times V_{CC}$	-	-	V
		$V_{CC} = 2.3$ V to 2.7 V		1.6	-	-	V
		$V_{CC} = 3.0$ V to 3.6 V		2.0	-	-	V
V_{IL}	LOW-level input voltage	$V_{CC} = 0.8$ V		-	-	$0.25 \times V_{CC}$	V
		$V_{CC} = 0.9$ V to 1.95 V		-	-	$0.30 \times V_{CC}$	V
		$V_{CC} = 2.3$ V to 2.7 V		-	-	0.7	V
		$V_{CC} = 3.0$ V to 3.6 V		-	-	0.9	V

All information provided in this document is subject to legal disclaimers.

© NXP B.V. 2012. All rights reserved.

Table 7. Static characteristics *...continued*

At recommended operating conditions; voltages are referenced to GND (ground = 0 V).

Symbol	Parameter	Conditions		Min	Typ	Max	Unit
V_{OH}	HIGH-level output voltage	$V_I = V_{IH}$ or V_{IL}					
		$I_O = -20\ \mu A$; $V_{CC} = 0.8$ V to 3.6 V		$V_{CC} - 0.11$	-	-	V
		$I_O = -1.1$ mA; $V_{CC} = 1.1$ V		$0.6 \times V_{CC}$	-	-	V
		$I_O = -1.7$ mA; $V_{CC} = 1.4$ V		0.93	-	-	V
		$I_O = -1.9$ mA; $V_{CC} = 1.65$ V		1.17	-	-	V
		$I_O = -2.3$ mA; $V_{CC} = 2.3$ V		1.77	-	-	V
		$I_O = -3.1$ mA; $V_{CC} = 2.3$ V		1.67	-	-	V
		$I_O = -2.7$ mA; $V_{CC} = 3.0$ V		2.40	-	-	V
		$I_O = -4.0$ mA; $V_{CC} = 3.0$ V		2.30	-	-	V
V_{OL}	LOW-level output voltage	$V_I = V_{IH}$ or V_{IL}					
		$I_O = 20\ \mu A$; $V_{CC} = 0.8$ V to 3.6 V		-	-	0.11	V
		$I_O = 1.1$ mA; $V_{CC} = 1.1$ V		-	-	$0.33 \times V_{CC}$	V
		$I_O = 1.7$ mA; $V_{CC} = 1.4$ V		-	-	0.41	V
		$I_O = 1.9$ mA; $V_{CC} = 1.65$ V		-	-	0.39	V
		$I_O = 2.3$ mA; $V_{CC} = 2.3$ V		-	-	0.36	V
		$I_O = 3.1$ mA; $V_{CC} = 2.3$ V		-	-	0.50	V
		$I_O = 2.7$ mA; $V_{CC} = 3.0$ V		-	-	0.36	V
		$I_O = 4.0$ mA; $V_{CC} = 3.0$ V		-	-	0.50	V
I_I	input leakage current	V_I = GND to 3.6 V; $V_{CC} = 0$ V to 3.6 V		-	-	±0.75	μA
I_{OZ}	OFF-state output current	$V_I = V_{IH}$ or V_{IL}; $V_O = 0$ V to 3.6 V; $V_{CC} = 0$ V to 3.6 V		-	-	±0.75	μA
I_{OFF}	power-off leakage current	V_I or $V_O = 0$ V to 3.6 V; $V_{CC} = 0$ V		-	-	±0.75	μA
ΔI_{OFF}	additional power-off leakage current	V_I or $V_O = 0$ V to 3.6 V; $V_{CC} = 0$ V to 0.2 V		-	-	±0.75	μA
I_{CC}	supply current	V_I = GND or V_{CC}; $I_O = 0$ A; $V_{CC} = 0.8$ V to 3.6 V		-	-	1.4	μA
ΔI_{CC}	additional supply current	$V_I = V_{CC} - 0.6$ V; $I_O = 0$ A; $V_{CC} = 3.3$ V	[1]	-	-	75	μA

[1] One input at $V_{CC} - 0.6$ V, other input at V_{CC} or GND.

All information provided in this document is subject to legal disclaimers.

© NXP B.V. 2012. All rights reserved.

11. Dynamic characteristics

Table 8. Dynamic characteristics

Voltages are referenced to GND (ground = 0 V); for test circuit see Figure 11.

Symbol	Parameter	Conditions		25 °C			–40 °C to +125 °C				Unit
				Min	Typ[1]	Max	Min (85 °C)	Max (85 °C)	Min (125 °C)	Max (125 °C)	
C_L = 5 pF											
t_{pd}	propagation delay	D to Q; see Figure 7	[2]								
		V_{CC} = 0.8 V		-	21.4	-	-	-	-	-	ns
		V_{CC} = 1.1 V to 1.3 V		2.8	6.6	13.5	2.6	13.8	2.6	15.2	ns
		V_{CC} = 1.4 V to 1.6 V		2.4	4.6	7.8	2.1	8.3	2.1	9.1	ns
		V_{CC} = 1.65 V to 1.95 V		1.9	3.7	6.2	1.6	6.7	1.6	7.3	ns
		V_{CC} = 2.3 V to 2.7 V		1.8	2.9	4.1	1.5	4.5	1.5	4.9	ns
		V_{CC} = 3.0 V to 3.6 V		1.5	2.5	3.5	1.2	4.0	1.2	4.5	ns
		LE to Q; see Figure 8	[2]								
		V_{CC} = 0.8 V		-	20.3	-	-	-	-	-	ns
		V_{CC} = 1.1 V to 1.3 V		2.7	6.2	13.6	2.5	14.0	2.5	15.4	ns
		V_{CC} = 1.4 V to 1.6 V		2.3	4.4	7.6	2.0	8.5	2.0	9.3	ns
		V_{CC} = 1.65 V to 1.95 V		1.8	3.5	5.8	1.5	6.7	1.5	7.3	ns
		V_{CC} = 2.3 V to 2.7 V		1.5	2.6	4.0	1.3	4.4	1.3	4.8	ns
		V_{CC} = 3.0 V to 3.6 V		1.3	2.2	3.3	1.1	3.8	1.1	4.2	ns
t_{en}	enable time	$\overline{OE}$ to Q; see Figure 10	[3]								
		V_{CC} = 0.8 V		-	17.9	-	-	-	-	-	ns
		V_{CC} = 1.1 V to 1.3 V		3.2	5.1	9.2	3.0	9.2	3.0	10.1	ns
		V_{CC} = 1.4 V to 1.6 V		2.6	3.8	5.8	2.4	6.1	2.4	6.7	ns
		V_{CC} = 1.65 V to 1.95 V		2.2	3.3	4.8	2.0	5.0	2.0	5.5	ns
		V_{CC} = 2.3 V to 2.7 V		2.0	2.7	3.8	1.8	4.0	1.8	4.4	ns
		V_{CC} = 3.0 V to 3.6 V		1.9	2.5	3.4	1.8	3.6	1.8	4.0	ns
t_{dis}	disable time	$\overline{OE}$ to Q; see Figure 10	[4]								
		V_{CC} = 0.8 V		-	9.4	-	-	-	-	-	ns
		V_{CC} = 1.1 V to 1.3 V		2.9	4.2	7.5	2.8	7.9	2.8	8.7	ns
		V_{CC} = 1.4 V to 1.6 V		2.2	3.2	4.9	2.1	5.3	2.1	5.8	ns
		V_{CC} = 1.65 V to 1.95 V		2.2	3.0	4.4	2.1	4.9	2.1	5.4	ns
		V_{CC} = 2.3 V to 2.7 V		1.6	2.2	3.1	1.5	3.4	1.5	3.7	ns
		V_{CC} = 3.0 V to 3.6 V		1.9	2.6	3.3	1.8	3.6	1.8	4.0	ns

All information provided in this document is subject to legal disclaimers.

© NXP B.V. 2012. All rights reserved.

Table 8. Dynamic characteristics *...continued*

Voltages are referenced to GND (ground = 0 V); for test circuit see Figure 11.

Symbol	Parameter	Conditions		25 °C			–40 °C to +125 °C				Unit
				Min	Typ[1]	Max	Min (85 °C)	Max (85 °C)	Min (125 °C)	Max (125 °C)	
C_L = 10 pF											
t_{pd}	propagation delay	D to Q; see Figure 7	[2]								
		V_{CC} = 0.8 V		-	24.4	-	-	-	-	-	ns
		V_{CC} = 1.1 V to 1.3 V		3.0	7.5	15.3	2.7	15.9	2.7	17.4	ns
		V_{CC} = 1.4 V to 1.6 V		2.6	5.3	9.0	2.2	9.4	2.2	10.3	ns
		V_{CC} = 1.65 V to 1.95 V		2.5	4.3	6.9	2.1	7.3	2.1	8.0	ns
		V_{CC} = 2.3 V to 2.7 V		2.0	3.5	4.8	1.8	5.3	1.8	5.9	ns
		V_{CC} = 3.0 V to 3.6 V		1.8	3.1	4.2	1.7	4.6	1.7	5.1	ns
		LE to Q; see Figure 8	[2]								
		V_{CC} = 0.8 V		-	23.3	-	-	-	-	-	ns
		V_{CC} = 1.1 V to 1.3 V		2.9	7.1	15.4	2.7	16.1	2.7	17.7	ns
		V_{CC} = 1.4 V to 1.6 V		2.5	5.0	8.8	2.1	9.5	2.1	10.4	ns
		V_{CC} = 1.65 V to 1.95 V		2.3	4.1	6.6	2.0	7.3	2.0	8.1	ns
		V_{CC} = 2.3 V to 2.7 V		1.9	3.1	4.7	1.6	5.2	1.6	5.8	ns
		V_{CC} = 3.0 V to 3.6 V		1.7	2.8	4.0	1.4	4.4	1.4	4.9	ns
t_{en}	enable time	$\overline{OE}$ to Q; see Figure 10	[3]								
		V_{CC} = 0.8 V		-	21.2	-	-	-	-	-	ns
		V_{CC} = 1.1 V to 1.3 V		3.7	6.0	10.6	3.4	10.6	3.4	11.7	ns
		V_{CC} = 1.4 V to 1.6 V		3.1	4.5	6.7	2.8	7.0	2.8	7.7	ns
		V_{CC} = 1.65 V to 1.95 V		2.7	3.9	5.5	2.5	5.8	2.5	6.4	ns
		V_{CC} = 2.3 V to 2.7 V		2.4	3.3	4.5	2.2	4.7	2.2	5.2	ns
		V_{CC} = 3.0 V to 3.6 V		2.3	3.1	4.1	2.2	4.3	2.2	4.7	ns
t_{dis}	disable time	$\overline{OE}$ to Q; see Figure 10	[4]								
		V_{CC} = 0.8 V		-	11.3	-	-	-	-	-	ns
		V_{CC} = 1.1 V to 1.3 V		3.9	5.3	8.7	3.8	9.2	3.8	10.1	ns
		V_{CC} = 1.4 V to 1.6 V		3.0	4.1	5.8	2.9	6.2	2.9	6.8	ns
		V_{CC} = 1.65 V to 1.95 V		3.2	4.2	5.7	3.1	6.0	3.1	6.6	ns
		V_{CC} = 2.3 V to 2.7 V		2.3	3.0	4.0	2.2	4.3	2.2	4.7	ns
		V_{CC} = 3.0 V to 3.6 V		3.0	3.8	4.7	2.9	5.0	2.9	5.5	ns

All information provided in this document is subject to legal disclaimers.

© NXP B.V. 2012. All rights reserved.

Table 8. Dynamic characteristics *...continued*

Voltages are referenced to GND (ground = 0 V); for test circuit see Figure 11.

Symbol	Parameter	Conditions		25 °C			–40 °C to +125 °C				Unit
				Min	Typ[1]	Max	Min (85 °C)	Max (85 °C)	Min (125 °C)	Max (125 °C)	
C_L = 15 pF											
t_{pd}	propagation delay	D to Q; see Figure 7	[2]								
		V_{CC} = 0.8 V		-	27.3	-	-	-	-	-	ns
		V_{CC} = 1.1 V to 1.3 V		3.5	8.3	16.9	3.2	17.5	3.2	19.2	ns
		V_{CC} = 1.4 V to 1.6 V		3.1	5.9	9.6	2.7	10.5	2.7	11.6	ns
		V_{CC} = 1.65 V to 1.95 V		2.6	4.8	7.6	2.2	8.5	2.2	9.3	ns
		V_{CC} = 2.3 V to 2.7 V		2.5	3.9	5.5	2.2	5.9	2.2	6.5	ns
		V_{CC} = 3.0 V to 3.6 V		2.2	3.6	4.9	1.8	5.5	1.8	6.0	ns
		LE to Q; see Figure 8	[2]								
		V_{CC} = 0.8 V		-	26.1	-	-	-	-	-	ns
		V_{CC} = 1.1 V to 1.3 V		3.3	7.9	17.3	3.0	18.0	3.0	19.8	ns
		V_{CC} = 1.4 V to 1.6 V		3.0	5.6	9.7	2.5	10.7	2.5	11.8	ns
		V_{CC} = 1.65 V to 1.95 V		2.5	4.6	7.4	2.2	8.3	2.2	9.1	ns
		V_{CC} = 2.3 V to 2.7 V		2.3	3.6	5.3	2.0	5.9	2.0	6.4	ns
		V_{CC} = 3.0 V to 3.6 V		2.1	3.2	4.6	1.8	5.1	1.8	5.6	ns
t_{en}	enable time	$\overline{OE}$ to Q; see Figure 10	[3]								
		V_{CC} = 0.8 V		-	24.6	-	-	-	-	-	ns
		V_{CC} = 1.1 V to 1.3 V		4.1	6.8	12.1	3.8	12.1	3.8	13.3	ns
		V_{CC} = 1.4 V to 1.6 V		3.5	5.1	7.5	3.2	7.9	3.2	8.7	ns
		V_{CC} = 1.65 V to 1.95 V		3.1	4.4	6.1	2.8	6.5	2.8	7.2	ns
		V_{CC} = 2.3 V to 2.7 V		2.8	3.7	5.0	2.5	5.3	2.5	5.8	ns
		V_{CC} = 3.0 V to 3.6 V		2.6	3.5	4.7	2.5	4.9	2.5	5.4	ns
t_{dis}	disable time	$\overline{OE}$ to Q; see Figure 10	[4]								
		V_{CC} = 0.8 V		-	13.1	-	-	-	-	-	ns
		V_{CC} = 1.1 V to 1.3 V		4.9	6.5	9.8	4.8	10.4	4.8	11.4	ns
		V_{CC} = 1.4 V to 1.6 V		3.9	5.0	6.8	3.8	7.3	3.8	8.0	ns
		V_{CC} = 1.65 V to 1.95 V		4.2	5.3	6.9	4.1	7.3	4.1	8.0	ns
		V_{CC} = 2.3 V to 2.7 V		3.0	3.8	4.8	2.9	5.1	2.9	5.6	ns
		V_{CC} = 3.0 V to 3.6 V		4.1	5.0	6.1	4.0	6.4	4.0	7.0	ns

All information provided in this document is subject to legal disclaimers.

© NXP B.V. 2012. All rights reserved.

Table 8. Dynamic characteristics *...continued*

Voltages are referenced to GND (ground = 0 V); for test circuit see Figure 11.

Symbol	Parameter	Conditions		25 °C			–40 °C to +125 °C				Unit
				Min	Typ[1]	Max	Min (85 °C)	Max (85 °C)	Min (125 °C)	Max (125 °C)	
C_L = 30 pF											
t_{pd}	propagation delay	D to Q; see Figure 7	[2]								
		V_{CC} = 0.8 V		-	35.9	-	-	-	-	-	ns
		V_{CC} = 1.1 V to 1.3 V		4.0	10.6	22.1	3.7	23.3	3.7	25.6	ns
		V_{CC} = 1.4 V to 1.6 V		3.6	7.5	12.3	3.5	13.6	3.5	15.0	ns
		V_{CC} = 1.65 V to 1.95 V		3.5	6.2	9.5	3.2	10.5	3.2	11.5	ns
		V_{CC} = 2.3 V to 2.7 V		3.3	5.1	6.9	2.9	7.6	2.9	8.3	ns
		V_{CC} = 3.0 V to 3.6 V		3.0	4.7	6.4	2.9	7.2	2.9	7.9	ns
		LE to Q; see Figure 8	[2]								
		V_{CC} = 0.8 V		-	34.8	-	-	-	-	-	ns
		V_{CC} = 1.1 V to 1.3 V		3.9	10.2	22.2	3.7	23.5	3.7	25.9	ns
		V_{CC} = 1.4 V to 1.6 V		3.5	7.2	12.4	3.4	13.7	3.4	15.1	ns
		V_{CC} = 1.65 V to 1.95 V		3.3	5.9	9.5	3.0	10.5	3.0	11.6	ns
		V_{CC} = 2.3 V to 2.7 V		3.1	4.8	6.8	2.7	7.5	2.7	8.2	ns
		V_{CC} = 3.0 V to 3.6 V		2.9	4.4	6.1	2.6	7.0	2.6	7.7	ns
t_{en}	enable time	$\overline{OE}$ to Q; see Figure 10	[3]								
		V_{CC} = 0.8 V		-	34.5	-	-	-	-	-	ns
		V_{CC} = 1.1 V to 1.3 V		5.5	9.1	16.2	4.9	16.2	4.9	17.8	ns
		V_{CC} = 1.4 V to 1.6 V		4.6	6.7	9.9	4.2	10.5	4.2	11.6	ns
		V_{CC} = 1.65 V to 1.95 V		4.2	5.7	7.9	3.7	8.6	3.7	9.5	ns
		V_{CC} = 2.3 V to 2.7 V		3.6	4.9	6.4	3.4	6.9	3.4	7.6	ns
		V_{CC} = 3.0 V to 3.6 V		3.4	4.7	6.1	3.3	6.5	3.3	7.2	ns
t_{dis}	disable time	$\overline{OE}$ to Q; see Figure 10	[4]								
		V_{CC} = 0.8 V		-	19.2	-	-	-	-	-	ns
		V_{CC} = 1.1 V to 1.3 V		8.0	9.9	13.7	7.9	14.5	7.9	16.0	ns
		V_{CC} = 1.4 V to 1.6 V		6.3	7.7	9.7	6.2	10.5	6.2	11.6	ns
		V_{CC} = 1.65 V to 1.95 V		7.3	8.7	10.6	7.2	11.3	7.2	12.4	ns
		V_{CC} = 2.3 V to 2.7 V		5.2	6.2	7.5	5.1	7.8	5.1	8.6	ns
		V_{CC} = 3.0 V to 3.6 V		7.5	8.8	10.2	7.4	10.5	7.4	11.6	ns
C_L = 5 pF, 10 pF, 15 pF and 30 pF											
t_W	pulse width	LE HIGH; see Figure 8									
		V_{CC} = 0.8 V		-	4.0	-	-	-	-	-	ns
		V_{CC} = 1.1 V to 1.3 V		-	0.7	-	2.1	-	2.1	-	ns
		V_{CC} = 1.4 V to 1.6 V		-	0.5	-	1.3	-	1.3	-	ns
		V_{CC} = 1.65 V to 1.95 V		-	0.4	-	1.0	-	1.0	-	ns
		V_{CC} = 2.3 V to 2.7 V		-	0.3	-	0.8	-	0.8	-	ns
		V_{CC} = 3.0 V to 3.6 V		-	0.2	-	0.8	-	0.8	-	ns

All information provided in this document is subject to legal disclaimers.

© NXP B.V. 2012. All rights reserved.

Table 8. Dynamic characteristics *...continued*

Voltages are referenced to GND (ground = 0 V); for test circuit see Figure 11.

Symbol	Parameter	Conditions	25 °C			–40 °C to +125 °C				Unit
			Min	Typ[1]	Max	Min (85 °C)	Max (85 °C)	Min (125 °C)	Max (125 °C)	
$t_{su(H)}$	set-up time HIGH	D to LE; see Figure 9								
		V_{CC} = 0.8 V	-	4.6	-	-	-	-	-	ns
		V_{CC} = 1.1 V to 1.3 V	-	0.9	-	2.2	-	2.2	-	ns
		V_{CC} = 1.4 V to 1.6 V	-	0.6	-	1.4	-	1.4	-	ns
		V_{CC} = 1.65 V to 1.95 V	-	0.4	-	1.0	-	1.0	-	ns
		V_{CC} = 2.3 V to 2.7 V	-	0	-	0.6	-	0.6	-	ns
		V_{CC} = 3.0 V to 3.6 V	-	–0.1	-	0.4	-	0.4	-	ns
$t_{su(L)}$	set-up time LOW	D to LE; see Figure 9								
		V_{CC} = 0.8 V	-	4.0	-	-	-	-	-	ns
		V_{CC} = 1.1 V to 1.3 V	-	1.2	-	2.7	-	2.7	-	ns
		V_{CC} = 1.4 V to 1.6 V	-	0.7	-	1.5	-	1.5	-	ns
		V_{CC} = 1.65 V to 1.95 V	-	0.6	-	1.2	-	1.2	-	ns
		V_{CC} = 2.3 V to 2.7 V	-	0.4	-	0.9	-	0.9	-	ns
		V_{CC} = 3.0 V to 3.6 V	-	0.3	-	0.7	-	0.7	-	ns
t_h	hold time	D to LE HIGH or LOW; see Figure 9								
		V_{CC} = 0.8 V	-	–4.6	-	-	-	-	-	ns
		V_{CC} = 1.1 V to 1.3 V	-	–0.9	-	–0.1	-	–0.1	-	ns
		V_{CC} = 1.4 V to 1.6 V	-	–0.6	-	–0.1	-	–0.1	-	ns
		V_{CC} = 1.65 V to 1.95 V	-	–0.4	-	0	-	0	-	ns
		V_{CC} = 2.3 V to 2.7 V	-	–0.2	-	0.2	-	0.2	-	ns
		V_{CC} = 3.0 V to 3.6 V	-	–0.1	-	0.3	-	0.3	-	ns

All information provided in this document is subject to legal disclaimers.

© NXP B.V. 2012. All rights reserved.

Table 8. Dynamic characteristics *...continued*

Voltages are referenced to GND (ground = 0 V); for test circuit see Figure 11.

Symbol	Parameter	Conditions	25 °C			–40 °C to +125 °C				Unit
			Min	Typ[1]	Max	Min (85 °C)	Max (85 °C)	Min (125 °C)	Max (125 °C)	
C_{PD}	power dissipation capacitance	f_i = 1 MHz; V_I = GND to V_{CC} [5][6]								
		output enabled								
		V_{CC} = 0.8 V	-	2.0	-	-	-	-	-	pF
		V_{CC} = 1.1 V to 1.3 V	-	2.0	-	-	-	-	-	pF
		V_{CC} = 1.4 V to 1.6 V	-	2.0	-	-	-	-	-	pF
		V_{CC} = 1.65 V to 1.95 V	-	2.1	-	-	-	-	-	pF
		V_{CC} = 2.3 V to 2.7 V	-	2.4	-	-	-	-	-	pF
		V_{CC} = 3.0 V to 3.6 V	-	2.8	-	-	-	-	-	pF

[1] All typical values are measured at nominal V_{CC}.

[2] t_{pd} is the same as t_{PLH} and t_{PHL}.

[3] t_{en} is the same as t_{PZH} and t_{PZL}.

[4] t_{dis} is the same as t_{PHZ} and t_{PLZ}.

[5] All specified values are the average typical values over all stated loads.

[6] C_{PD} is used to determine the dynamic power dissipation (P_D in μW).
$P_D = C_{PD} \times V_{CC}^2 \times f_i \times N + \Sigma(C_L \times V_{CC}^2 \times f_o)$ where:
f_i = input frequency in MHz;
f_o = output frequency in MHz;
C_L = output load capacitance in pF;
V_{CC} = supply voltage in V;
$\Sigma(C_L \times V_{CC}^2 \times f_o)$ = sum of the outputs;
N = number of inputs switching.

12. Waveforms

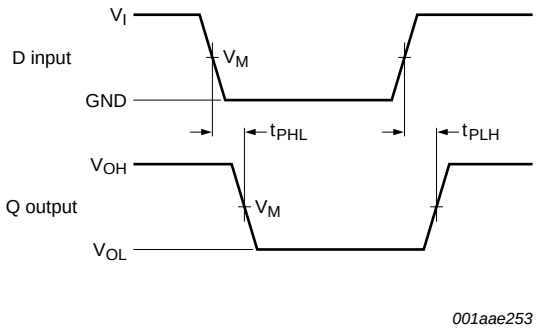

Measurement points are given in Table 9.

Logic levels: V_{OL} and V_{OH} are typical output voltage levels that occur with the output load.

Fig 7. The data input (D) to output (Q) propagation delays

All information provided in this document is subject to legal disclaimers.

© NXP B.V. 2012. All rights reserved.

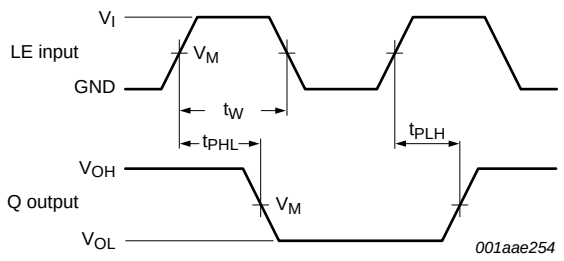

Measurement points are given in Table 9.

Logic levels: V_{OL} and V_{OH} are typical output voltage levels that occur with the output load.

Fig 8. The latch enable input (LE) to output (Q) propagation delays, the latch enable input (LE) pulse width

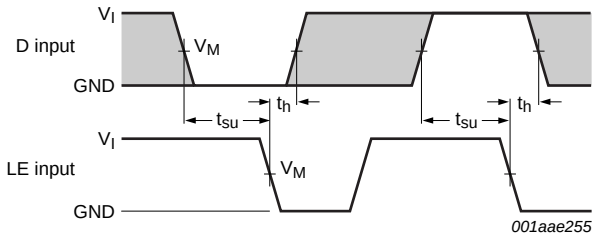

Measurement points are given in Table 9.

Logic levels: V_{OL} and V_{OH} are typical output voltage levels that occur with the output load.

Fig 9. Data set-up and hold times for the D input to the LE input

Table 9. Measurement points

Supply voltage	Output	Input		
V_{CC}	V_M	V_M	V_I	$t_r = t_f$
0.8 V to 3.6 V	$0.5 \times V_{CC}$	$0.5 \times V_{CC}$	V_{CC}	≤ 3.0 ns

All information provided in this document is subject to legal disclaimers.

© NXP B.V. 2012. All rights reserved.

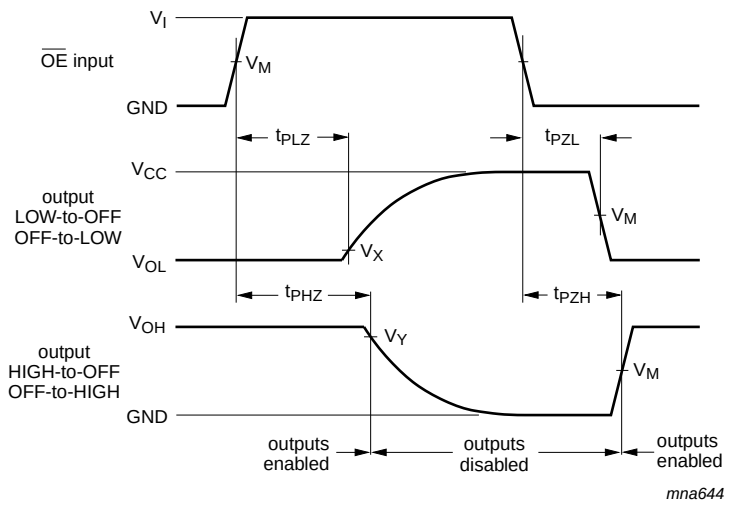

Measurement points are given in Table 10.

Logic levels: V_{OL} and V_{OH} are typical output voltage levels that occur with the output load.

Fig 10. Turn-on and turn-off times

Table 10. Measurement points

Supply voltage	Input	Output		
V_{CC}	V_M	V_M	V_X	V_Y
0.8 V to 1.6 V	$0.5 \times V_{CC}$	$0.5 \times V_{CC}$	V_{OL} + 0.1 V	V_{OH} – 0.1 V
1.65 V to 2.7 V	$0.5 \times V_{CC}$	$0.5 \times V_{CC}$	V_{OL} + 0.15 V	V_{OH} – 0.15 V
3.0 V to 3.6 V	$0.5 \times V_{CC}$	$0.5 \times V_{CC}$	V_{OL} + 0.3 V	V_{OH} – 0.3 V

All information provided in this document is subject to legal disclaimers.

© NXP B.V. 2012. All rights reserved.

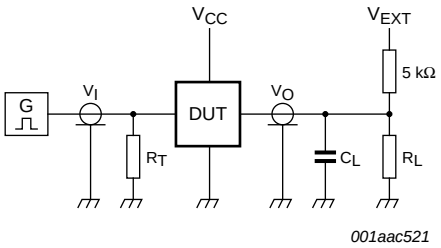

Test data is given in Table 11.

Definitions for test circuit:

R_L = Load resistance.

C_L = Load capacitance including jig and probe capacitance.

R_T = Termination resistance should be equal to the output impedance Z_o of the pulse generator.

V_{EXT} = External voltage for measuring switching times.

Fig 11. Test circuit for measuring switching times

Table 11. Test data

Supply voltage	Load		V_{EXT}		
V_{CC}	C_L	R_L [1]	t_{PLH}, t_{PHL}	t_{PZH}, t_{PHZ}	t_{PZL}, t_{PLZ}
0.8 V to 3.6 V	5 pF, 10 pF, 15 pF and 30 pF	5 kΩ or 1 MΩ	open	GND	2 × V_{CC}

[1] For measuring enable and disable times R_L = 5 kΩ, for measuring propagation delays, setup and hold times and pulse width R_L = 1 MΩ.

All information provided in this document is subject to legal disclaimers.

© NXP B.V. 2012. All rights reserved.

13. Package outline

Plastic surface-mounted package; 6 leads **SOT363**

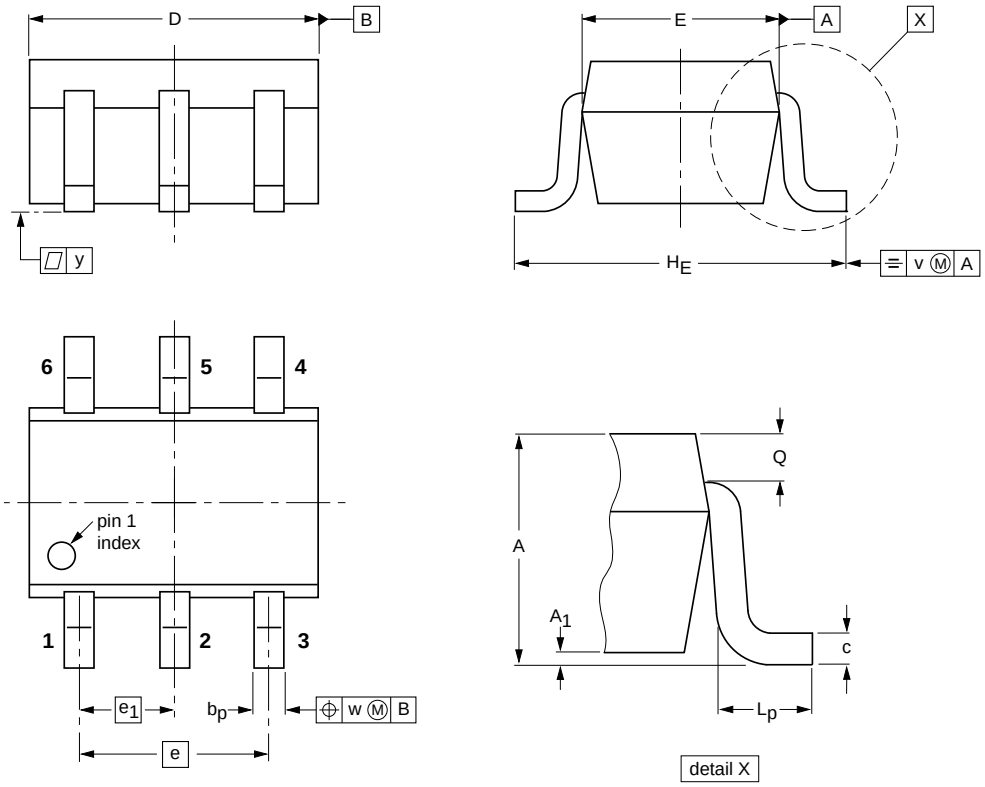

DIMENSIONS (mm are the original dimensions)

UNIT	A	A_1 max	b_p	c	D	E	e	e_1	H_E	L_p	Q	v	w	y
mm	1.1 0.8	0.1	0.30 0.20	0.25 0.10	2.2 1.8	1.35 1.15	1.3	0.65	2.2 2.0	0.45 0.15	0.25 0.15	0.2	0.2	0.1

OUTLINE VERSION	REFERENCES				EUROPEAN PROJECTION	ISSUE DATE
	IEC	JEDEC	JEITA			
SOT363			SC-88			~~04-11-08~~ 06-03-16

Fig 12. Package outline SOT363 (SC-88)

All information provided in this document is subject to legal disclaimers.

© NXP B.V. 2012. All rights reserved.

XSON6: plastic extremely thin small outline package; no leads; 6 terminals; body 1 x 1.45 x 0.5 mm SOT886

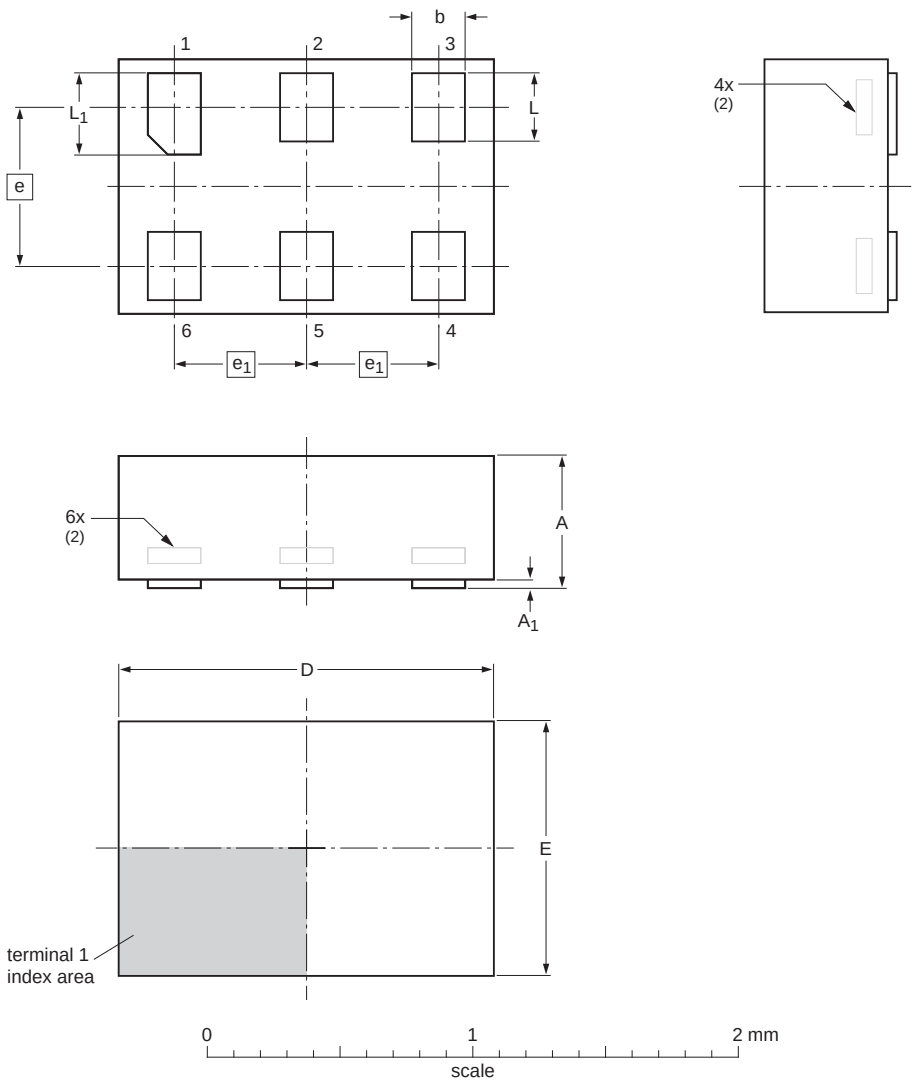

Dimensions (mm are the original dimensions)

Unit		A(1)	A_1	b	D	E	e	e_1	L	L_1
mm	max	0.5	0.04	0.25	1.50	1.05			0.35	0.40
	nom			0.20	1.45	1.00	0.6	0.5	0.30	0.35
	min			0.17	1.40	0.95			0.27	0.32

Notes
1. Including plating thickness.
2. Can be visible in some manufacturing processes.

sot886_po

Outline version	References				European projection	Issue date
	IEC	JEDEC	JEITA			
SOT886		MO-252				~~04-07-22~~ 12-01-05

Fig 13. Package outline SOT886 (XSON6)

All information provided in this document is subject to legal disclaimers.

© NXP B.V. 2012. All rights reserved.

XSON6: plastic extremely thin small outline package; no leads; 6 terminals; body 1 x 1 x 0.5 mm **SOT891**

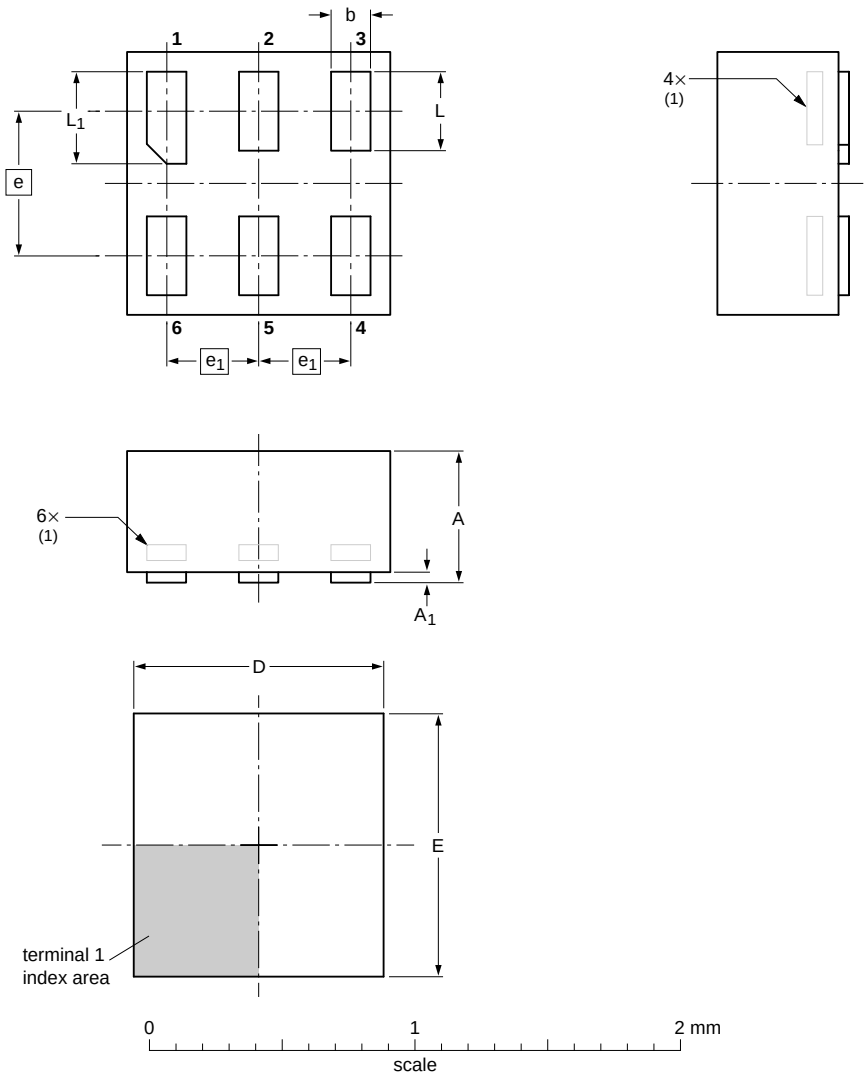

DIMENSIONS (mm are the original dimensions)

UNIT	A max	A_1 max	b	D	E	e	e_1	L	L_1
mm	0.5	0.04	0.20 0.12	1.05 0.95	1.05 0.95	0.55	0.35	0.35 0.27	0.40 0.32

Note

1. Can be visible in some manufacturing processes.

OUTLINE VERSION	REFERENCES				EUROPEAN PROJECTION	ISSUE DATE
	IEC	JEDEC	JEITA			
SOT891						~~05-04-06~~ 07-05-15

Fig 14. Package outline SOT891 (XSON6)

All information provided in this document is subject to legal disclaimers.

© NXP B.V. 2012. All rights reserved.

XSON6: extremely thin small outline package; no leads; 6 terminals; body 0.9 x 1.0 x 0.35 mm **SOT1115**

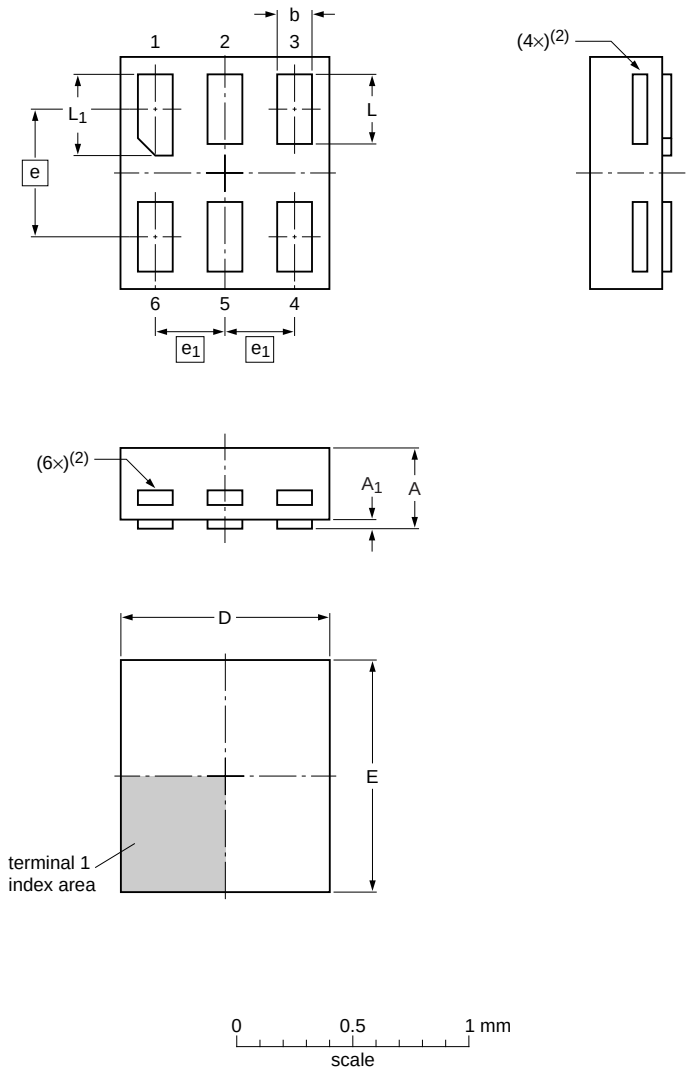

Dimensions

Unit		A(1)	A_1	b	D	E	e	e_1	L	L_1
mm	max	0.35	0.04	0.20	0.95	1.05			0.35	0.40
	nom			0.15	0.90	1.00	0.55	0.3	0.30	0.35
	min			0.12	0.85	0.95			0.27	0.32

Note
1. Including plating thickness.
2. Visible depending upon used manufacturing technology.

sot1115_po

Outline version	References				European projection	Issue date
	IEC	JEDEC	JEITA			
SOT1115						~~10-04-02~~ 10-04-07

Fig 15. Package outline SOT1115 (XSON6)

All information provided in this document is subject to legal disclaimers.

© NXP B.V. 2012. All rights reserved.

XSON6: extremely thin small outline package; no leads; 6 terminals; body 1.0 x 1.0 x 0.35 mm **SOT1202**

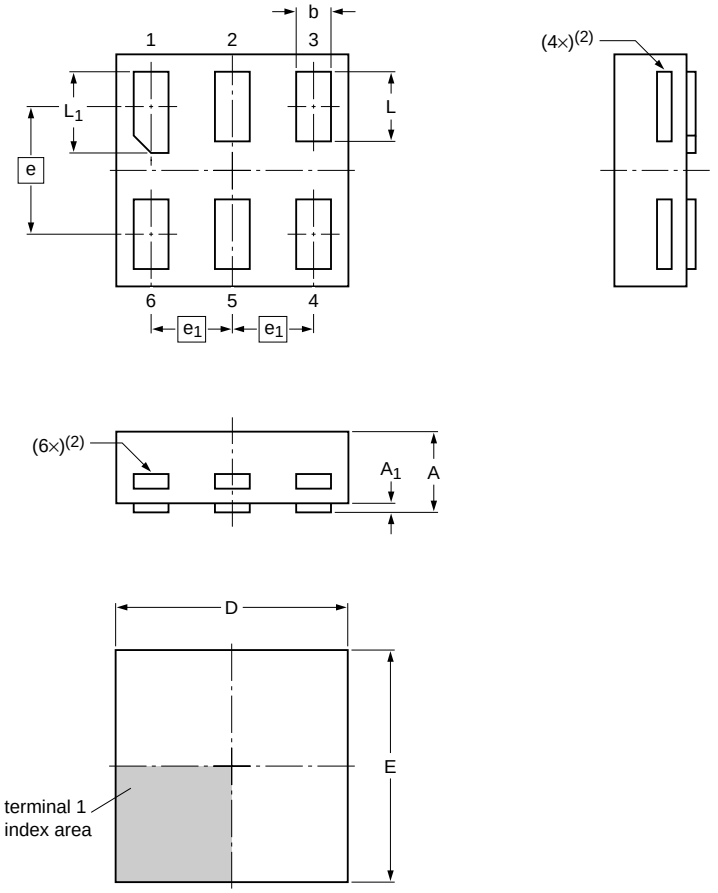

Dimensions

Unit		A(1)	A_1	b	D	E	e	e_1	L	L_1
mm	max	0.35	0.04	0.20	1.05	1.05			0.35	0.40
	nom			0.15	1.00	1.00	0.55	0.35	0.30	0.35
	min			0.12	0.95	0.95			0.27	0.32

Note
1. Including plating thickness.
2. Visible depending upon used manufacturing technology.

sot1202_po

Outline version	References				European projection	Issue date
	IEC	JEDEC	JEITA			
SOT1202						~~10-04-02~~ 10-04-06

Fig 16. Package outline SOT1202 (XSON6)

All information provided in this document is subject to legal disclaimers.

© NXP B.V. 2012. All rights reserved.

14. Abbreviations

Table 12. Abbreviations

Acronym	Description
CDM	Charged Device Model
DUT	Device Under Test
ESD	ElectroStatic Discharge
HBM	Human Body Model
MM	Machine Model

15. Revision history

Table 13. Revision history

Document ID	Release date	Data sheet status	Change notice	Supersedes
74AUP1G373 v.6	20120704	Product data sheet	-	74AUP1G373 v.5
Modifications:	• Package outline drawing of SOT886 (Figure 13) modified.			
74AUP1G373 v.5	20111125	Product data sheet	-	74AUP1G373 v.4
Modifications:	• Legal pages updated.			
74AUP1G373 v.4	20100715	Product data sheet	-	74AUP1G373 v.3
74AUP1G373 v.3	20080109	Product data sheet	-	74AUP1G373 v.2
74AUP1G373 v.2	20070720	Product data sheet	-	74AUP1G373 v.1
74AUP1G373 v.1	20061129	Product data sheet	-	-

All information provided in this document is subject to legal disclaimers.

© NXP B.V. 2012. All rights reserved.

16. Legal information

16.1 Data sheet status

Document status[1][2]	Product status[3]	Definition
Objective [short] data sheet	Development	This document contains data from the objective specification for product development.
Preliminary [short] data sheet	Qualification	This document contains data from the preliminary specification.
Product [short] data sheet	Production	This document contains the product specification.

[1] Please consult the most recently issued document before initiating or completing a design.

[2] The term 'short data sheet' is explained in section "Definitions".

[3] The product status of device(s) described in this document may have changed since this document was published and may differ in case of multiple devices. The latest product status information is available on the Internet at URL http://www.nxp.com.

16.2 Definitions

Draft — The document is a draft version only. The content is still under internal review and subject to formal approval, which may result in modifications or additions. NXP Semiconductors does not give any representations or warranties as to the accuracy or completeness of information included herein and shall have no liability for the consequences of use of such information.

Short data sheet — A short data sheet is an extract from a full data sheet with the same product type number(s) and title. A short data sheet is intended for quick reference only and should not be relied upon to contain detailed and full information. For detailed and full information see the relevant full data sheet, which is available on request via the local NXP Semiconductors sales office. In case of any inconsistency or conflict with the short data sheet, the full data sheet shall prevail.

Product specification — The information and data provided in a Product data sheet shall define the specification of the product as agreed between NXP Semiconductors and its customer, unless NXP Semiconductors and customer have explicitly agreed otherwise in writing. In no event however, shall an agreement be valid in which the NXP Semiconductors product is deemed to offer functions and qualities beyond those described in the Product data sheet.

16.3 Disclaimers

Limited warranty and liability — Information in this document is believed to be accurate and reliable. However, NXP Semiconductors does not give any representations or warranties, expressed or implied, as to the accuracy or completeness of such information and shall have no liability for the consequences of use of such information. NXP Semiconductors takes no responsibility for the content in this document if provided by an information source outside of NXP Semiconductors.

In no event shall NXP Semiconductors be liable for any indirect, incidental, punitive, special or consequential damages (including - without limitation - lost profits, lost savings, business interruption, costs related to the removal or replacement of any products or rework charges) whether or not such damages are based on tort (including negligence), warranty, breach of contract or any other legal theory.

Notwithstanding any damages that customer might incur for any reason whatsoever, NXP Semiconductors' aggregate and cumulative liability towards customer for the products described herein shall be limited in accordance with the *Terms and conditions of commercial sale* of NXP Semiconductors.

Right to make changes — NXP Semiconductors reserves the right to make changes to information published in this document, including without limitation specifications and product descriptions, at any time and without notice. This document supersedes and replaces all information supplied prior to the publication hereof.

Suitability for use — NXP Semiconductors products are not designed, authorized or warranted to be suitable for use in life support, life-critical or safety-critical systems or equipment, nor in applications where failure or malfunction of an NXP Semiconductors product can reasonably be expected to result in personal injury, death or severe property or environmental damage. NXP Semiconductors and its suppliers accept no liability for inclusion and/or use of NXP Semiconductors products in such equipment or applications and therefore such inclusion and/or use is at the customer's own risk.

Applications — Applications that are described herein for any of these products are for illustrative purposes only. NXP Semiconductors makes no representation or warranty that such applications will be suitable for the specified use without further testing or modification.

Customers are responsible for the design and operation of their applications and products using NXP Semiconductors products, and NXP Semiconductors accepts no liability for any assistance with applications or customer product design. It is customer's sole responsibility to determine whether the NXP Semiconductors product is suitable and fit for the customer's applications and products planned, as well as for the planned application and use of customer's third party customer(s). Customers should provide appropriate design and operating safeguards to minimize the risks associated with their applications and products.

NXP Semiconductors does not accept any liability related to any default, damage, costs or problem which is based on any weakness or default in the customer's applications or products, or the application or use by customer's third party customer(s). Customer is responsible for doing all necessary testing for the customer's applications and products using NXP Semiconductors products in order to avoid a default of the applications and the products or of the application or use by customer's third party customer(s). NXP does not accept any liability in this respect.

Limiting values — Stress above one or more limiting values (as defined in the Absolute Maximum Ratings System of IEC 60134) will cause permanent damage to the device. Limiting values are stress ratings only and (proper) operation of the device at these or any other conditions above those given in the Recommended operating conditions section (if present) or the Characteristics sections of this document is not warranted. Constant or repeated exposure to limiting values will permanently and irreversibly affect the quality and reliability of the device.

Terms and conditions of commercial sale — NXP Semiconductors products are sold subject to the general terms and conditions of commercial sale, as published at http://www.nxp.com/profile/terms, unless otherwise agreed in a valid written individual agreement. In case an individual agreement is concluded only the terms and conditions of the respective agreement shall apply. NXP Semiconductors hereby expressly objects to applying the customer's general terms and conditions with regard to the purchase of NXP Semiconductors products by customer.

No offer to sell or license — Nothing in this document may be interpreted or construed as an offer to sell products that is open for acceptance or the grant, conveyance or implication of any license under any copyrights, patents or other industrial or intellectual property rights.

All information provided in this document is subject to legal disclaimers.

© NXP B.V. 2012. All rights reserved.

Export control — This document as well as the item(s) described herein may be subject to export control regulations. Export might require a prior authorization from competent authorities.

Non-automotive qualified products — Unless this data sheet expressly states that this specific NXP Semiconductors product is automotive qualified, the product is not suitable for automotive use. It is neither qualified nor tested in accordance with automotive testing or application requirements. NXP Semiconductors accepts no liability for inclusion and/or use of non-automotive qualified products in automotive equipment or applications.

In the event that customer uses the product for design-in and use in automotive applications to automotive specifications and standards, customer (a) shall use the product without NXP Semiconductors' warranty of the product for such automotive applications, use and specifications, and (b) whenever customer uses the product for automotive applications beyond NXP Semiconductors' specifications such use shall be solely at customer's own risk, and (c) customer fully indemnifies NXP Semiconductors for any liability, damages or failed product claims resulting from customer design and use of the product for automotive applications beyond NXP Semiconductors' standard warranty and NXP Semiconductors' product specifications.

Translations — A non-English (translated) version of a document is for reference only. The English version shall prevail in case of any discrepancy between the translated and English versions.

16.4 Trademarks

Notice: All referenced brands, product names, service names and trademarks are the property of their respective owners.

17. Contact information

For more information, please visit: **http://www.nxp.com**

For sales office addresses, please send an email to: **salesaddresses@nxp.com**

All information provided in this document is subject to legal disclaimers.

© NXP B.V. 2012. All rights reserved.

18. Contents

1 General description 1
2 Features and benefits 1
3 Ordering information 2
4 Marking 2
5 Functional diagram 2
6 Pinning information 3
6.1 Pinning 3
6.2 Pin description 3
7 Functional description 3
8 Limiting values 4
9 Recommended operating conditions 4
10 Static characteristics 4
11 Dynamic characteristics 8
12 Waveforms 13
13 Package outline 17
14 Abbreviations 22
15 Revision history 22
16 Legal information 23
16.1 Data sheet status 23
16.2 Definitions 23
16.3 Disclaimers 23
16.4 Trademarks 24
17 Contact information 24
18 Contents 25

Please be aware that important notices concerning this document and the product(s) described herein, have been included in section 'Legal information'.

© NXP B.V. 2012. All rights reserved.

For more information, please visit: http://www.nxp.com
For sales office addresses, please send an email to: salesaddresses@nxp.com

Date of release: 4 July 2012
Document identifier: 74AUP1G373