REVISIONS			
REV.	DESCRIPTION	DATE	APPROVED
A	ADDED CIRCUIT BREAKER 3A EC 3391	8/7/03	NT/

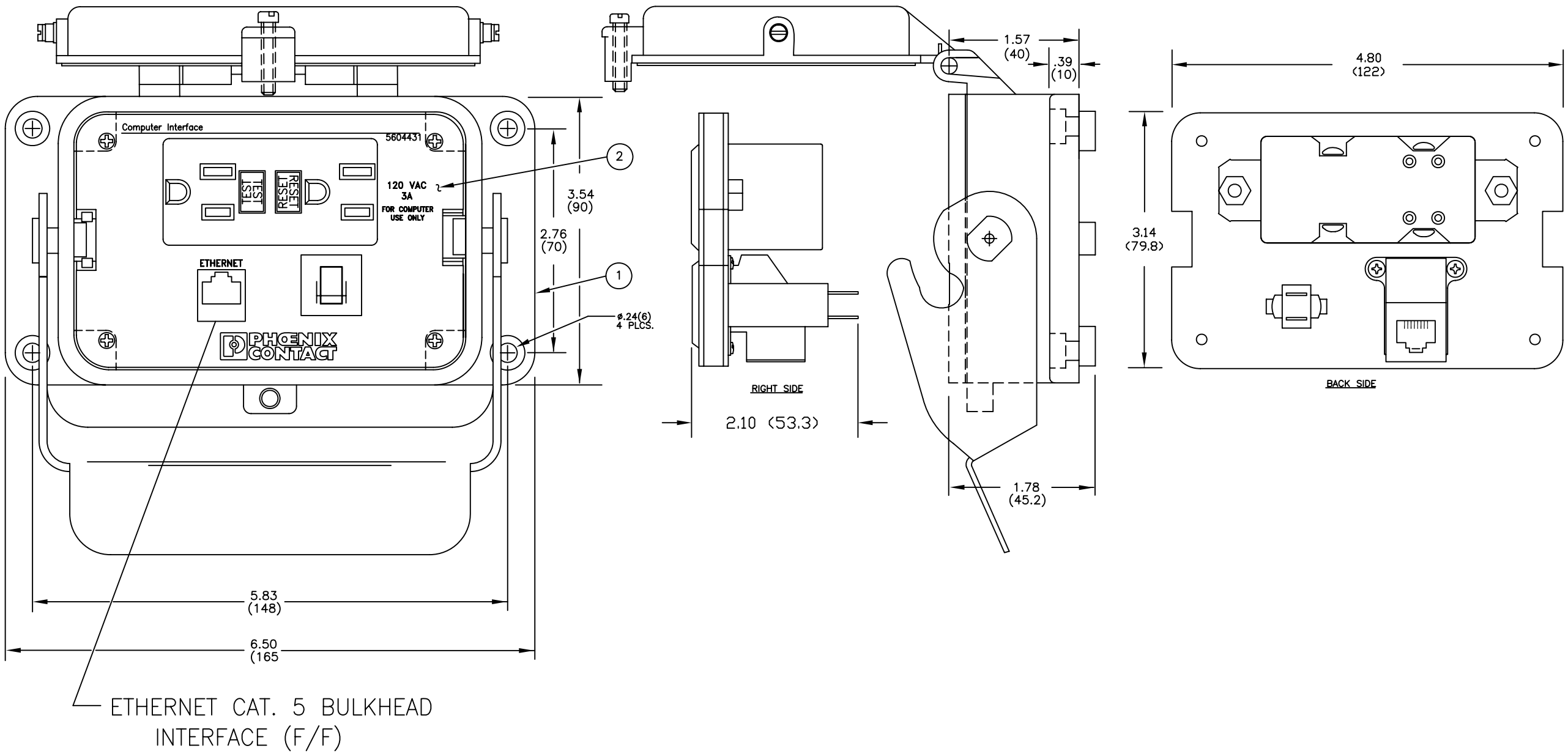

UNLESS OTHERWISE SPECIFIED DIMENSIONS ARE IN INCHES MILLIMETERS ARE IN PARENTHESES PROJECTION ◎ ▱	TOLERANCES .XX = ±.01(0.2) .XXX = ±.005(0.13)	ANGLES N/A	
MATERIAL	DUST COVER–POLYAMIDE 6.6 HOUSING–ALUMINUM CAST ALLOY LOCKING PINS AND HANDLE – STEEL		
FINISH	DUST COVER–GRAY HOUSING–HAMMER FINISH, SILVER–GRAY LOCKING PINS AND HANDLE – ZINC PLATE		
DO NOT SCALE PRINT			

APPROVALS	DATE
DRAWN NRT	7/28 03
CHECKED JMB	7/28 03
APPROVED BAL	7/28 03

PHOENIX CONTACT
P.O. BOX 4100
HARRISBURG, PA
(717) 944–1300
FAX (717) 944–1625

TITLE
HC–P RJ45 CAT 5
GFCI 3A

SIZE	DWG. NO.	REV.
C	5604431	A

SCALE 1:1 SHEET 1/1