WIRING DIAGRAM

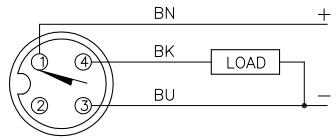

OUTPUT: AP6X

SHORT–CIRCUIT AND OVERLOAD PROTECTED

LOCKNUT LN–SS08

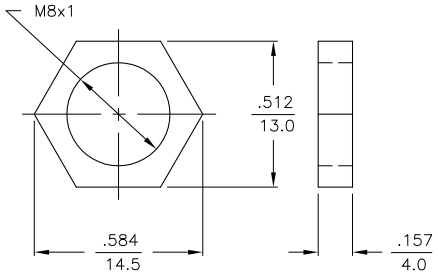

SPECIFICATIONS

RATED OPERATING DISTANCE	2mm = .079" (NOMINAL)
MOUNTING MODE	FLUSH
MIN. REPEAT ACCURACY	≤ 2%
TEMPERATURE DRIFT	≤ ±10%
HYSTERESIS (SWITCHING DISTANCE)	3–15%
OPERATING TEMPERATURE	−30°C to +85°C (−22°F to +185°F)
RATED OPERATIONAL VOLTAGE	10–30 VDC
MAX. RIPPLE	≤ 10%
DC RATED OPERATIONAL CURRENT	≤ 150 mA
NO–LOAD CURRENT	≤ 15 mA
MAX. OFF–STATE CURRENT	≤ 0.1 mA
RATED INSULATION VOLTAGE	≤ 0.5 kV
SHORT–CIRCUIT PROTECTION	INCORPORATED
MAX. VOLTAGE DROP	≤ 1.8 V
WIRE BREAKAGE PROTECTION	INCORPORATED
REVERSE POLARITY PROTECTION	INCORPORATED
OUTPUT FUNCTION	3–WIRE, NORMALLY OPEN, PNP
MAX. SWITCHING FREQUENCY	≤ 1 kHz
HOUSING MATERIAL	METAL, A4 1.4404 (AISI 316L)
ACTIVE FACE	PLASTIC, PA12–GF20
CONNECTOR	M8x1
VIBRATION RESISTANCE	55 Hz, 1 mm AMPLITUDE (IN ALL 3 PLANES)
SHOCK RESISTANCE	30 g, 11 ms
DEGREE OF PROTECTION	IP68
SWITCHING STATUS INDICATION	LED, YELLOW

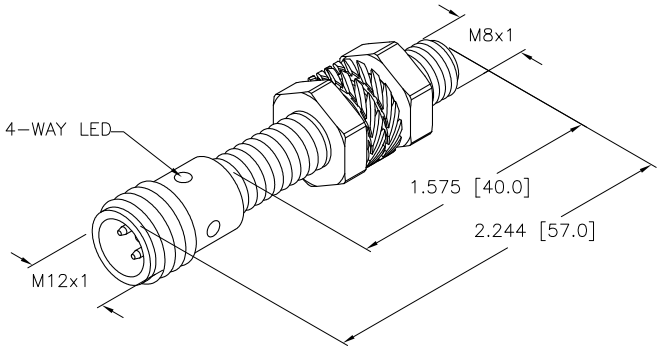

SOURCE DRAWING - FOR REFERENCE ONLY

REV	DESCRIPTION	BY	DATE	ECO NO.
B	UPDATE TEMP. SPEC.	RDS	10/29/07	19057

RELATED DOCUMENTS
1.
2.
3.
4.

3RD ANGLE PROJECTION

THIS DRAWING IS PROPERTY OF TURCK INC. USE OF THIS DOCUMENT WITHOUT WRITTEN PERMISSION IS PROHIBITED.

TURCK INC
High Technology Sensors and Automation Controls

3000 CAMPUS DRIVE
MINNEAPOLIS, MN 55441
1–800–544–7769
(763) 553–7300
(763) 553–0708 fax
turck.com

MATERIAL

FINISH

ALL DIMENSIONS DISPLAYED ON THIS DRAWING ARE FOR REFERENCE ONLY

CONTACT TURCK FOR MORE INFORMATION

DRFT RDS
DATE 05/09/06
DSGN TB
SCALE 1=1.0

UNIT OF MEASUREMENT
INCH [MILLIMETER]
DO NOT SCALE THIS DRAWING

DESCRIPTION
BI 2U–EG08–AP6X–H1341

IDENTIFICATION NO. S4602034
REV B

FILE: S4602034
SHEET 1 OF 1