- **3-State Outputs Drive Bus Lines or Buffer Memory Address Registers**
- **Choice of True or Inverting Outputs**
- **Package Options Include Plastic "Small Outline" Packages, Ceramic Chip Carriers and Flat Packages, and Plastic and Ceramic DIPs**
- **Dependable Texas Instruments Quality and Reliability**

'365A, '367A, 'LS365A, 'LS367A True Outputs '366A, '368A, 'LS366A, 'LS368A Inverting Outputs

description

These Hex buffers and line drivers are designed specifically to improve both the performance and density of three-state memory address drivers, clock drivers, and bus oriented receivers and transmitters. The designer has choice of selected combinations of inverting and noninverting outputs, symmetrical $\overline{G}$ (active-low control) inputs.

These devices feature high fan-out, improved fan-in, and can be used to drive terminated lines down to 133 ohms.

The SN54365A thru SN54368A and SN54LS365A thru SN54LS368A are characterized for operation over the full military temperature range of −55°C to 125°C. The SN74365A thru SN74368A and SN74LS365A thru SN74LS368A are characterized for operation from 0°C to 70°C.

SN54365A, 366A, SN54LS365A, 366A . . . J PACKAGE
SN74365A, 366A . . . N PACKAGE
SN74LS365A, SN74LS366A . . . D OR N PACKAGE
(TOP VIEW)

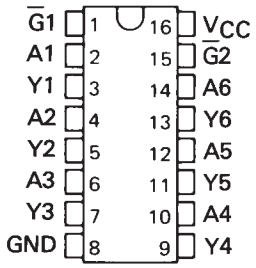

SN54LS365A, SN54LS366A . . . FK PACKAGE
(TOP VIEW)

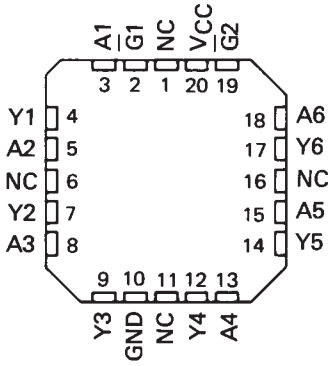

SN54367A, 368A, SN54LS367A, 368A . . . J PACKAGE
SN74367A, 368A . . . N PACKAGE
SN74LS367A, SN74LS368A . . . D OR N PACKAGE
(TOP VIEW)

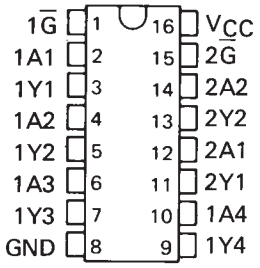

SN54LS367A, SN54LS368A . . . FK PACKAGE
(TOP VIEW)

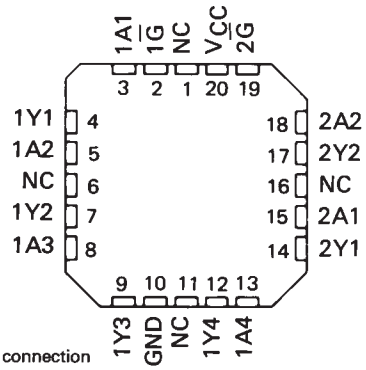

NC – No internal connection

PRODUCTION DATA documents contain information current as of publication date. Products conform to specifications per the terms of Texas Instruments standard warranty. Production processing does not necessarily include testing of all parameters.

schematics of inputs and outputs

'365A thru '368A

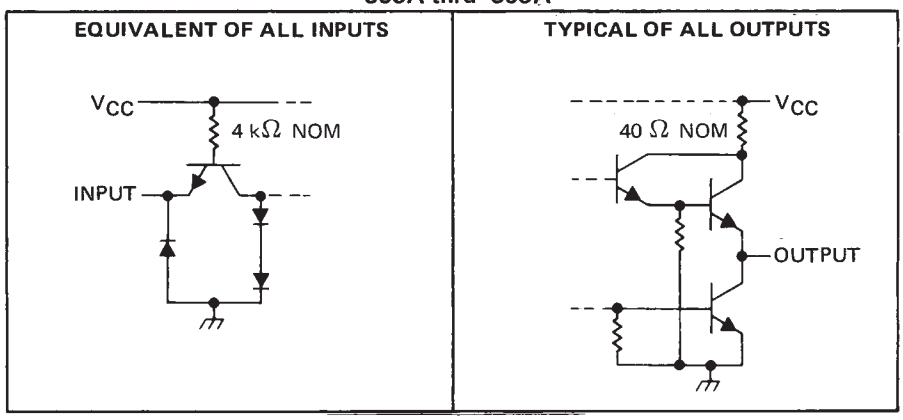

'LS365A thru 'LS368A

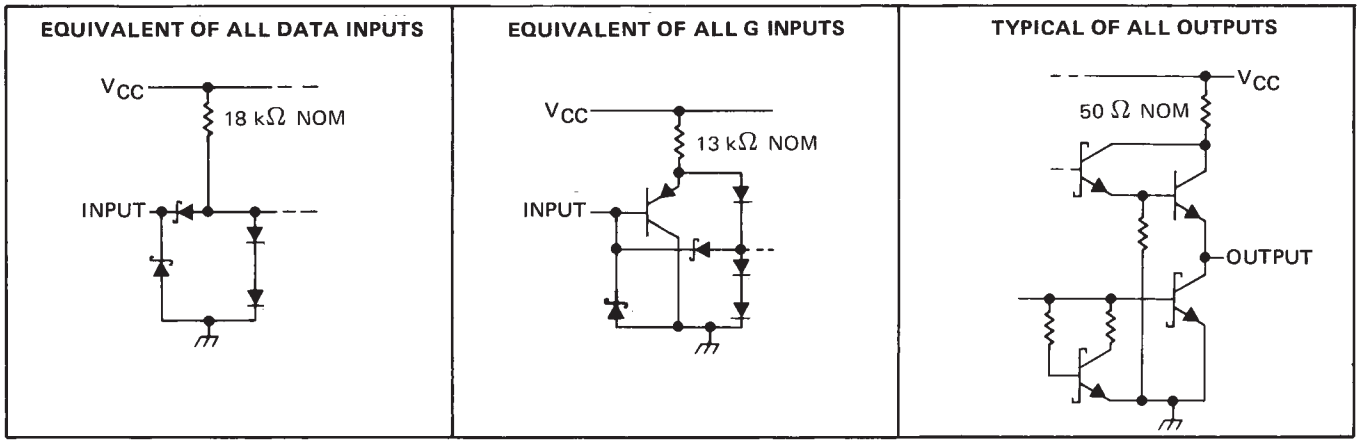

logic diagrams (positive logic)

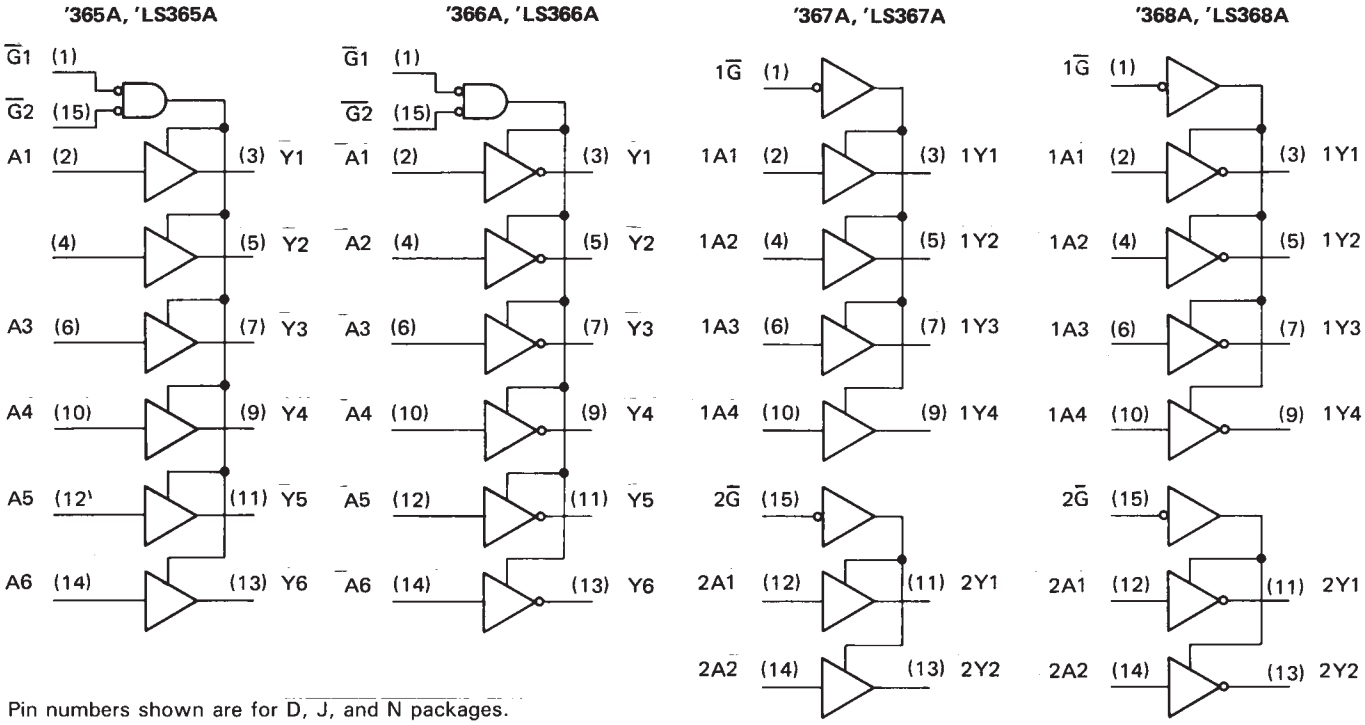

Pin numbers shown are for D, J, and N packages.

logic symbols†

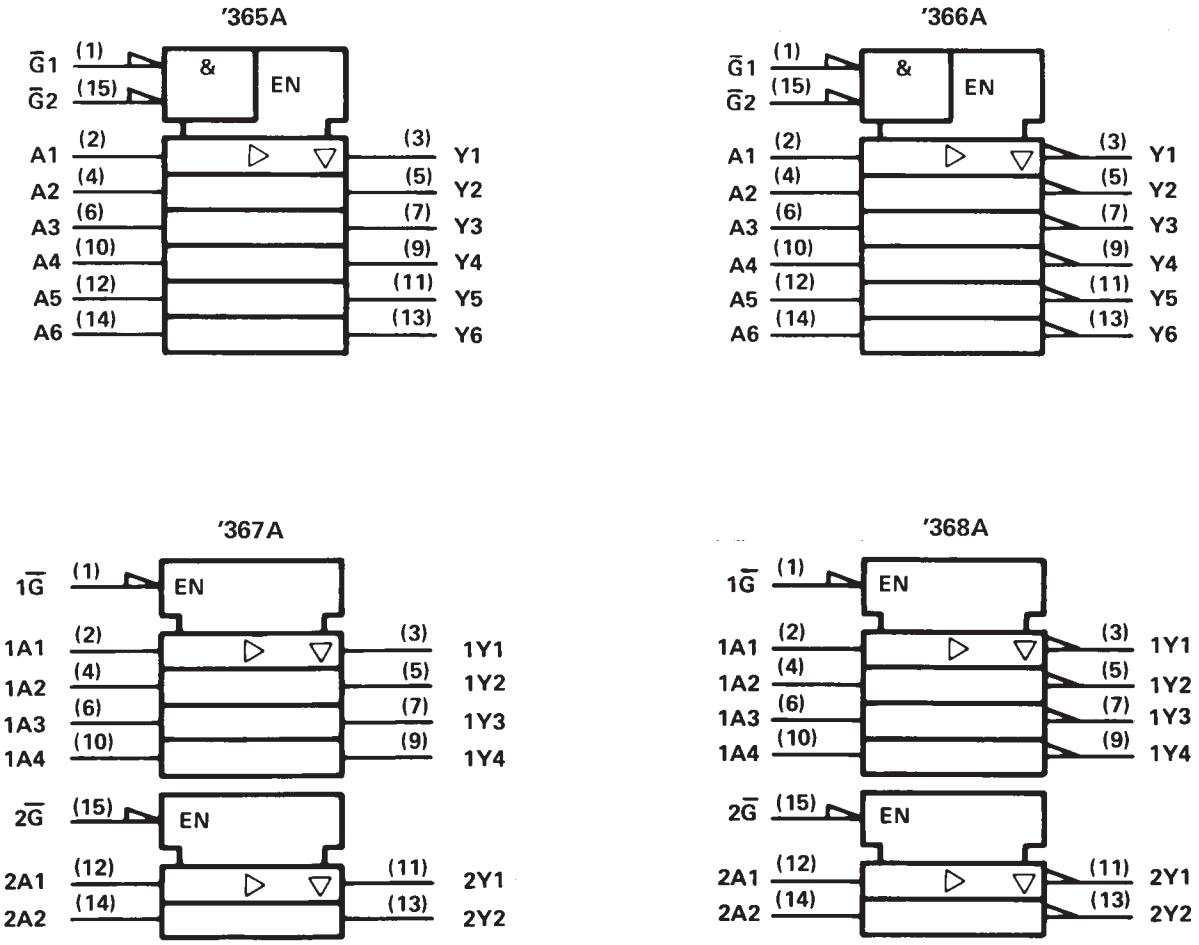

†These symbols are in accordance with ANSI/IEEE Std 91-1984 and IEC Publication 617-12.
Pin numbers shown are for D, J, and N packages.

absolute maximum ratings over operating free-air temperature range (unless otherwise noted)

Supply voltage, V_{CC} (see Note 1) . . . . . 7 V
Input voltage: '365A, '366A, '367A, '368A . . . . . 5.5 V
'LS365A, 'LS366A, 'LS367A, 'LS368A . . . . . 7 V
Voltage applied to a disabled 3-state output . . . . . 5.5 V
Operating free-air temperature: SN54' . . . . . −55°C to 125°C
SN74' . . . . . 0°C to 70°C
Storage temperature range . . . . . −65°C to 150°C

NOTE 1: Voltage values are with respect to network ground terminal.

recommended operating conditions

		SN54365A SN54367A			SN74365A SN74367A			UNIT
		MIN	NOM	MAX	MIN	NOM	MAX	
V_{CC}	Supply voltage	4.5	5	5.5	4.75	5	5.25	V
V_{IH}	High-level input voltage	2			2			V
V_{IL}	Low-level input voltage			0.8			0.8	V
I_{OH}	High-level output current			– 2			– 5.2	mA
I_{OL}	Low-level output current			32			32	mA
T_A	Operating free-air temperature	– 55		125	0		70	°C

electrical characteristics over recommended operating free-air temperature range (unless otherwise noted)

PARAMETER		TEST CONDITIONS†			SN54365A SN54367A			SN74365A SN74367A			UNIT
					MIN	TYP‡	MAX	MIN	TYP‡	MAX	
V_{IK}		V_{CC} = MIN,	I_I = – 12 mA				– 1.5			– 1.5	V
V_{OH}		V_{CC} = MIN, I_{OH} = MAX	V_{IH} = 2 V,	V_{IL} = 0.8 V,	2.4	3.3		2.4	3.1		V
V_{OL}		V_{CC} = MIN, I_{OL} = 32 mA	V_{IH} = 2 V,	V_{IL} = 0.8 V,			0.4			0.4	V
I_{OZ}		V_{CC} = MAX, V_O = 2.4 V	V_{IH} = 2 V,	V_{IL} = 0.8 V,			40			40	μA
		V_{CC} = MAX, V_O = 0.4 V	V_{IH} = 2 V	V_{IL} = 0.8 V,			– 40			– 40	
I_I		V_{CC} = MAX,	V_I = 5.5 V				1			1	mA
I_{IH}		V_{CC} = MAX,	V_I = 2.4 V				40			40	μA
I_{IL}	A Inputs	V_{CC} = MAX,	V_I = 0.5 V,	Either $\overline{G}$ input at 2 V			– 40			– 40	μA
		V_{CC} = MAX,	V_I = 0.4 V,	Both $\overline{G}$ inputs at 0.4 V			– 1.6			– 1.6	mA
	$\overline{G}$ Inputs	V_{CC} = MAX,	V_I = 0.4 V				– 1.6			– 1.6	
I_{OS}§		V_{CC} = MAX			– 40		– 130	– 40		– 130	mA
I_{CC}		V_{CC} = MAX,	Data inputs = 0 V,	Output controls = 4.5 V		65	85		65	85	mA

† For conditions shown as MIN or MAX, use the appropriate value specified under recommended operating conditions.
‡ All typical values are at V_{CC} = 5 V, T_A = 25°C.
§ Not more than one output should be shorted at a time.

switching characteristics, V_{CC} = 5 V, T_A = 25°C (see note 2)

PARAMETER	FROM (INPUT)	TO (OUTPUT)	TEST CONDITIONS		MIN	TYP	MAX	UNIT
t_{PLH}	Any	Y	R_L = 400 Ω,	C_L = 50 pF			16	ns
t_{PHL}							22	ns
t_{PZH}							35	ns
t_{PZL}							37	ns
t_{PHZ}			R_L = 400 Ω,	C_L = 5 pF			11	ns
t_{PLZ}							27	ns

NOTE 2: Load circuits and voltage waveforms are shown in Section 1.

recommended operating conditions

		SN54366A SN54368A			SN74366A SN74368A			UNIT
		MIN	NOM	MAX	MIN	NOM	MAX	
V_{CC}	Supply voltage	4.5	5	5.5	4.75	5	5.25	V
V_{IH}	High-level input voltage	2			2			V
V_{IL}	Low-level input voltage			0.8			0.8	V
I_{OH}	High-level output current			−2			−5.2	mA
I_{OL}	Low-level output current			32			32	mA
T_A	Operating free-air temperature	−55		125	0		70	°C

electrical characteristics over recommended operating free-air temperature range (unless otherwise noted)

PARAMETER		TEST CONDITIONS†			SN54366A SN54368A			SN74366A SN74368A			UNIT
					MIN	TYP‡	MAX	MIN	TYP‡	MAX	
V_{IK}		V_{CC} = MIN,	I_I = −12 mA				−1.5			−1.5	V
V_{OH}		V_{CC} = MIN, I_{OH} = MAX	V_{IH} = 2 V,	V_{IL} = 0.8 V,	2.4	3.3		2.4	3.1		V
V_{OL}		V_{CC} = MIN, I_{OL} = 32 mA	V_{IH} = 2 V,	V_{IL} = 0.8 V,			0.4			0.4	V
I_{OZ}		V_{CC} = MAX, V_O = 2.4 V	V_{IH} = 2 V,	V_{IL} = 0.8 V,			40			40	μA
		V_{CC} = MAX, V_O = 0.4 V	V_{IH} = 2 V	V_{IL} = 0.8 V,			−40			−40	μA
I_I		V_{CC} = MAX,	V_I = 5.5 V				1			1	mA
I_{IH}		V_{CC} = MAX,	V_I = 2.4 V				40			40	μA
I_{IL}	A Inputs	V_{CC} = MAX,	V_I = 0.5 V,	Either $\overline{G}$ input at 2 V			−40			−40	μA
		V_{CC} = MAX,	V_I = 0.4 V,	Both $\overline{G}$ inputs at 0.4 V			−1.6			−1.6	mA
	$\overline{G}$ Inputs	V_{CC} = MAX,	V_I = 0.4 V				−1.6			−1.6	mA
I_{OS}§		V_{CC} = MAX			−40		−130	−40		−130	mA
I_{CC}		V_{CC} = MAX,	Data inputs = 0 V,	Output controls = 4.5 V,		59	77		59	77	mA

† For conditions shown as MIN or MAX, use the appropriate value specified under recommended operating conditions.
‡ All typical values are at V_{CC} = 5 V, T_A = 25°C.
§ Not more than one output should be shorted at a time.

switching characteristics, V_{CC} = 5 V, T_A = 25°C (see note 2)

PARAMETER	FROM (INPUT)	TO (OUTPUT)	TEST CONDITIONS		MIN	TYP	MAX	UNIT
t_{PLH}	Any	Y	R_L = 400 Ω,	C_L = 50 pF			17	ns
t_{PHL}							16	ns
t_{PZH}							35	ns
t_{PZL}							37	ns
t_{PHZ}			R_L = 400 Ω,	C_L = 5 pF			11	ns
t_{PLZ}							27	ns

NOTE 2: Load circuits and voltage waveforms are shown in Section 1.

recommended operating conditions

		SN54LS365A SN54LS367A			SN74LS365A SN74LS367A			UNIT
		MIN	NOM	MAX	MIN	NOM	MAX	
V_{CC}	Supply voltage	4.5	5	5.5	4.75	5	5.25	V
V_{IH}	High-level input voltage	2			2			V
V_{IL}	Low-level input voltage			0.7			0.8	V
I_{OH}	High-level output current			−1			−2.6	mA
I_{OL}	Low-level output current			12			24	mA
T_A	Operating free-air temperature	−55		125	0		70	°C

electrical characteristics over recommended operating free-air temperature range (unless otherwise noted)

PARAMETER		TEST CONDITIONS†			SN54LS365A SN54LS367A			SN74LS365A SN74LS367A			UNIT
					MIN	TYP‡	MAX	MIN	TYP‡	MAX	
V_{IK}		V_{CC} = MIN,	I_I = −18 mA				−1.5			−1.5	V
V_{OH}		V_{CC} = MIN, I_{OH} = MAX	V_{IH} = 2 V,	V_{IL} = MAX,	2.4	3.3		2.4	3.1		V
V_{OL}		V_{CC} = MIN, I_{OL} = 12 mA	V_{IH} = 2 V,	V_{IL} = MAX,		0.25	0.4		0.25	0.4	V
		V_{CC} = MIN, I_{OL} = 24 mA	V_{IH} = 2 V,	V_{IL} = 0.8 V,					0.35	0.5	
I_{OZ}		V_{CC} = MAX, V_O = 2.4 V	V_{IH} = 2 V,	V_{IL} = MAX,			20			20	μA
		V_{CC} = MAX, V_O = 0.4 V	V_{IH} = 2 V,	V_{IL} = MAX,			−20			−20	
I_I		V_{CC} = MAX,	V_I = 7 V				0.1			0.1	mA
I_{IH}		V_{CC} = MAX,	V_I = 2.7 V				20			20	μA
I_{IL}	A Inputs	V_{CC} = MAX,	V_I = 0.5 V,	Either $\overline{G}$ input at 2 V			−20			−20	μA
		V_{CC} = MAX,	V_I = 0.4 V,	Both $\overline{G}$ inputs at 0.4 V			−0.4			−0.4	mA
	$\overline{G}$ Inputs	V_{CC} = MAX,	V_I = 0.4 V				−0.2			−0.2	
I_{OS}§		V_{CC} = MAX			−40		−225	−40		−225	mA
I_{CC}		V_{CC} = MAX,	Data inputs = 0 V,	Output controls = 4.5 V,		14	24		14	24	mA

† For conditions shown as MIN or MAX, use the appropriate value specified under recommended operating conditions.
‡ All typical values are at V_{CC} = 5 V, T_A = 25°C.
§ Not more than one output should be shorted at a time, and the duration of the short circuit should not exceed one second.

switching characteristics, V_{CC} = 5 V, T_A = 25°C (see note 2)

PARAMETER	FROM (INPUT)	TO (OUTPUT)	TEST CONDITIONS	MIN	TYP	MAX	UNIT
t_{PLH}	Any	Y	R_L = 667 Ω, C_L = 45 pF		10	16	ns
t_{PHL}					9	22	ns
t_{PZH}					19	35	ns
t_{PZL}					24	40	ns
t_{PHZ}			R_L = 667 Ω, C_L = 5 pF			30	ns
t_{PLZ}						35	ns

NOTE 2: Load circuits and voltage waveforms are shown in Section 1.

recommended operating conditions

		SN54LS366A SN54LS368A			SN74LS366A SN74LS368A			UNIT
		MIN	NOM	MAX	MIN	NOM	MAX	
V_{CC}	Supply voltage	4.5	5	5.5	4.75	5	5.25	V
V_{IH}	High-level input voltage	2			2			V
V_{IL}	Low-level input voltage			0.7			0.8	V
I_{OH}	High-level output current			–1			– 2.6	mA
I_{OL}	Low-level output current			12			24	mA
T_A	Operating free-air temperature	– 55		125	0		70	°C

electrical characteristics over recommended operating free-air temperature range (unless otherwise noted)

PARAMETER		TEST CONDITIONS†			SN54LS366A SN54LS368A			SN74LS366A SN74LS368A			UNIT
					MIN	TYP‡	MAX	MIN	TYP‡	MAX	
V_{IK}		V_{CC} = MIN,	I_I = – 18 mA				– 1.5			– 1.5	V
V_{OH}		V_{CC} = MIN, I_{OH} = MAX	V_{IH} = 2 V,	V_{IL} = MAX,	2.4	3.3		2.4	3.1		V
V_{OL}		V_{CC} = MIN, I_{OL} = 12 mA	V_{IH} = 2 V,	V_{IL} = MAX,		0.25	0.4		0.25	0.4	V
		V_{CC} = MIN, I_{OL} = 24 mA	V_{IH} = 2 V,	V_{IL} = 0.8 V,					0.35	0.5	
I_{OZ}		V_{CC} = MAX, V_O = 2.4 V	V_{IH} = 2 V,	V_{IL} = MAX,			20			20	μA
		V_{CC} = MAX, V_O = 0.4 V	V_{IH} = 2 V,	V_{IL} = MAX,			– 20			– 20	
I_I		V_{CC} = MAX,	V_I = 7 V				0.1			0.1	mA
I_{IH}		V_{CC} = MAX,	V_I = 2.7 V				20			20	μA
I_{IL}	A Inputs	V_{CC} = MAX,	V_I = 0.5 V,	Either $\overline{G}$ input at 2 V			– 20			– 20	uA
		V_{CC} = MAX,	V_I = 0.4 V,	Both $\overline{G}$ inputs at 0.4 V			– 0.4			– 0.4	mA
	$\overline{G}$ Inputs	V_{CC} = MAX,	V_I = 0.4 V				– 0.2			– 0.2	
I_{OS}§		V_{CC} = MAX			– 40		– 225	– 40		– 225	mA
I_{CC}		V_{CC} = MAX,	Data inputs = 0 V,	Output controls = 4.5 V,		12	21		12	21	mA

† For conditions shown as MIN or MAX, use the appropriate value specified under recommended operating conditions.
‡ All typical values are at V_{CC} = 5 V, T_A = 25°C.
§ Not more than one output should be shorted at a time, and the duration of the short circuit should not exceed one second.

switching characteristics, V_{CC} = 5 V, T_A = 25°C (see note 2)

PARAMETER	FROM (INPUT)	TO (OUTPUT)	TEST CONDITIONS	MIN	TYP	MAX	UNIT
t_{PLH}	Any	Y	R_L = 667 Ω, C_L = 45 pF		7	15	ns
t_{PHL}					12	18	ns
t_{PZH}					18	35	ns
t_{PZL}					28	45	ns
t_{PHZ}			R_L = 667 Ω, C_L = 5 pF			32	ns
t_{PLZ}						35	ns

NOTE 2: Load circuits and voltage waveforms are shown in Section 1.

PACKAGING INFORMATION

Orderable Device	Status (1)	Package Type	Package Drawing	Pins	Package Qty	Eco Plan (2)	Lead/Ball Finish (6)	MSL Peak Temp (3)	Op Temp (°C)	Device Marking (4/5)	Samples
5962-9687802QEA	OBSOLETE	CDIP	J	16		TBD	Call TI	Call TI	-55 to 125		
5962-9687802QFA	OBSOLETE	CFP	W	16		TBD	Call TI	Call TI	-55 to 125		
5962-9687802QFA	OBSOLETE	CFP	W	16		TBD	Call TI	Call TI	-55 to 125		
JM38510/16303BEA	OBSOLETE	CDIP	J	16		TBD	Call TI	Call TI	-55 to 125		
JM38510/16303BEA	OBSOLETE	CDIP	J	16		TBD	Call TI	Call TI	-55 to 125		
JM38510/16304BEA	OBSOLETE	CDIP	J	16		TBD	Call TI	Call TI	-55 to 125		
JM38510/16304BEA	OBSOLETE	CDIP	J	16		TBD	Call TI	Call TI	-55 to 125		
JM38510/32201B2A	ACTIVE	LCCC	FK	20	1	TBD	POST-PLATE	N / A for Pkg Type	-55 to 125	JM38510/ 32201B2A	Samples
JM38510/32201B2A	ACTIVE	LCCC	FK	20	1	TBD	POST-PLATE	N / A for Pkg Type	-55 to 125	JM38510/ 32201B2A	Samples
JM38510/32201BEA	ACTIVE	CDIP	J	16	1	TBD	A42	N / A for Pkg Type	-55 to 125	JM38510/ 32201BEA	Samples
JM38510/32201BEA	ACTIVE	CDIP	J	16	1	TBD	A42	N / A for Pkg Type	-55 to 125	JM38510/ 32201BEA	Samples
JM38510/32201BFA	ACTIVE	CFP	W	16	1	TBD	A42	N / A for Pkg Type	-55 to 125	JM38510/ 32201BFA	Samples
JM38510/32201BFA	ACTIVE	CFP	W	16	1	TBD	A42	N / A for Pkg Type	-55 to 125	JM38510/ 32201BFA	Samples
JM38510/32203B2A	ACTIVE	LCCC	FK	20	1	TBD	POST-PLATE	N / A for Pkg Type	-55 to 125	JM38510/ 32203B2A	Samples
JM38510/32203B2A	ACTIVE	LCCC	FK	20	1	TBD	POST-PLATE	N / A for Pkg Type	-55 to 125	JM38510/ 32203B2A	Samples
JM38510/32203BEA	ACTIVE	CDIP	J	16	1	TBD	A42	N / A for Pkg Type	-55 to 125	JM38510/ 32203BEA	Samples
JM38510/32203BEA	ACTIVE	CDIP	J	16	1	TBD	A42	N / A for Pkg Type	-55 to 125	JM38510/ 32203BEA	Samples
JM38510/32203BFA	ACTIVE	CFP	W	16	1	TBD	A42	N / A for Pkg Type	-55 to 125	JM38510/ 32203BFA	Samples
JM38510/32203BFA	ACTIVE	CFP	W	16	1	TBD	A42	N / A for Pkg Type	-55 to 125	JM38510/ 32203BFA	Samples
JM38510/32203SEA	ACTIVE	CDIP	J	16	25	TBD	A42	N / A for Pkg Type	-55 to 125	JM38510/ 32203SEA	Samples

Orderable Device	Status (1)	Package Type	Package Drawing	Pins	Package Qty	Eco Plan (2)	Lead/Ball Finish (6)	MSL Peak Temp (3)	Op Temp (°C)	Device Marking (4/5)	Samples
JM38510/32203SEA	ACTIVE	CDIP	J	16	25	TBD	A42	N / A for Pkg Type	-55 to 125	JM38510/ 32203SEA	Samples
JM38510/32203SFA	ACTIVE	CFP	W	16	25	TBD	A42	N / A for Pkg Type	-55 to 125	JM38510/ 32203SFA	Samples
JM38510/32203SFA	ACTIVE	CFP	W	16	25	TBD	A42	N / A for Pkg Type	-55 to 125	JM38510/ 32203SFA	Samples
M38510/32201B2A	ACTIVE	LCCC	FK	20	1	TBD	POST-PLATE	N / A for Pkg Type	-55 to 125	JM38510/ 32201B2A	Samples
M38510/32201B2A	ACTIVE	LCCC	FK	20	1	TBD	POST-PLATE	N / A for Pkg Type	-55 to 125	JM38510/ 32201B2A	Samples
M38510/32201BEA	ACTIVE	CDIP	J	16	1	TBD	A42	N / A for Pkg Type	-55 to 125	JM38510/ 32201BEA	Samples
M38510/32201BEA	ACTIVE	CDIP	J	16	1	TBD	A42	N / A for Pkg Type	-55 to 125	JM38510/ 32201BEA	Samples
M38510/32201BFA	ACTIVE	CFP	W	16	1	TBD	A42	N / A for Pkg Type	-55 to 125	JM38510/ 32201BFA	Samples
M38510/32201BFA	ACTIVE	CFP	W	16	1	TBD	A42	N / A for Pkg Type	-55 to 125	JM38510/ 32201BFA	Samples
M38510/32203B2A	ACTIVE	LCCC	FK	20	1	TBD	POST-PLATE	N / A for Pkg Type	-55 to 125	JM38510/ 32203B2A	Samples
M38510/32203B2A	ACTIVE	LCCC	FK	20	1	TBD	POST-PLATE	N / A for Pkg Type	-55 to 125	JM38510/ 32203B2A	Samples
M38510/32203BEA	ACTIVE	CDIP	J	16	1	TBD	A42	N / A for Pkg Type	-55 to 125	JM38510/ 32203BEA	Samples
M38510/32203BEA	ACTIVE	CDIP	J	16	1	TBD	A42	N / A for Pkg Type	-55 to 125	JM38510/ 32203BEA	Samples
M38510/32203BFA	ACTIVE	CFP	W	16	1	TBD	A42	N / A for Pkg Type	-55 to 125	JM38510/ 32203BFA	Samples
M38510/32203BFA	ACTIVE	CFP	W	16	1	TBD	A42	N / A for Pkg Type	-55 to 125	JM38510/ 32203BFA	Samples
M38510/32203SEA	ACTIVE	CDIP	J	16	25	TBD	A42	N / A for Pkg Type	-55 to 125	JM38510/ 32203SEA	Samples
M38510/32203SEA	ACTIVE	CDIP	J	16	25	TBD	A42	N / A for Pkg Type	-55 to 125	JM38510/ 32203SEA	Samples
M38510/32203SFA	ACTIVE	CFP	W	16	25	TBD	A42	N / A for Pkg Type	-55 to 125	JM38510/ 32203SFA	Samples

Orderable Device	Status (1)	Package Type	Package Drawing	Pins	Package Qty	Eco Plan (2)	Lead/Ball Finish (6)	MSL Peak Temp (3)	Op Temp (°C)	Device Marking (4/5)	Samples
M38510/32203SFA	ACTIVE	CFP	W	16	25	TBD	A42	N / A for Pkg Type	-55 to 125	JM38510/ 32203SFA	Samples
SN54365AJ	OBSOLETE	CDIP	J	16		TBD	Call TI	Call TI	-55 to 125		
SN54365AJ	OBSOLETE	CDIP	J	16		TBD	Call TI	Call TI	-55 to 125		
SN54366AJ	OBSOLETE	CDIP	J	16		TBD	Call TI	Call TI	-55 to 125	SN54366AJ	
SN54366AJ	OBSOLETE	CDIP	J	16		TBD	Call TI	Call TI	-55 to 125	SN54366AJ	
SN54367AJ	OBSOLETE	CDIP	J	16		TBD	Call TI	Call TI	-55 to 125		
SN54367AJ	OBSOLETE	CDIP	J	16		TBD	Call TI	Call TI	-55 to 125		
SN54368AJ	OBSOLETE	CDIP	J	16		TBD	Call TI	Call TI	-55 to 125		
SN54368AJ	OBSOLETE	CDIP	J	16		TBD	Call TI	Call TI	-55 to 125		
SN54LS365AJ	ACTIVE	CDIP	J	16	1	TBD	A42	N / A for Pkg Type	-55 to 125	SN54LS365AJ	Samples
SN54LS365AJ	ACTIVE	CDIP	J	16	1	TBD	A42	N / A for Pkg Type	-55 to 125	SN54LS365AJ	Samples
SN54LS366AJ	ACTIVE	CDIP	J	16	1	TBD	A42	N / A for Pkg Type	-55 to 125	SN54LS366AJ	Samples
SN54LS366AJ	ACTIVE	CDIP	J	16	1	TBD	A42	N / A for Pkg Type	-55 to 125	SN54LS366AJ	Samples
SN54LS367AJ	ACTIVE	CDIP	J	16	25	TBD	A42	N / A for Pkg Type	-55 to 125	SN54LS367AJ	Samples
SN54LS367AJ	ACTIVE	CDIP	J	16	25	TBD	A42	N / A for Pkg Type	-55 to 125	SN54LS367AJ	Samples
SN54LS368AJ	ACTIVE	CDIP	J	16	1	TBD	A42	N / A for Pkg Type	-55 to 125	SN54LS368AJ	Samples
SN54LS368AJ	ACTIVE	CDIP	J	16	1	TBD	A42	N / A for Pkg Type	-55 to 125	SN54LS368AJ	Samples
SN74365AN	OBSOLETE	PDIP	N	16		TBD	Call TI	Call TI	0 to 70		
SN74365AN	OBSOLETE	PDIP	N	16		TBD	Call TI	Call TI	0 to 70		
SN74366AN	OBSOLETE	PDIP	N	16		TBD	Call TI	Call TI	0 to 70		
SN74366AN	OBSOLETE	PDIP	N	16		TBD	Call TI	Call TI	0 to 70		
SN74367AN	OBSOLETE	PDIP	N	16		TBD	Call TI	Call TI	0 to 70		
SN74367AN	OBSOLETE	PDIP	N	16		TBD	Call TI	Call TI	0 to 70		
SN74367AN3	OBSOLETE	PDIP	N	16		TBD	Call TI	Call TI	0 to 70		
SN74367AN3	OBSOLETE	PDIP	N	16		TBD	Call TI	Call TI	0 to 70		
SN74368AN	OBSOLETE	PDIP	N	16		TBD	Call TI	Call TI	0 to 70		
SN74368AN	OBSOLETE	PDIP	N	16		TBD	Call TI	Call TI	0 to 70		

Orderable Device	Status (1)	Package Type	Package Drawing	Pins	Package Qty	Eco Plan (2)	Lead/Ball Finish (6)	MSL Peak Temp (3)	Op Temp (°C)	Device Marking (4/5)	Samples
SN74368AN3	OBSOLETE	PDIP	N	16		TBD	Call TI	Call TI	0 to 70		
SN74368AN3	OBSOLETE	PDIP	N	16		TBD	Call TI	Call TI	0 to 70		
SN74LS365AD	ACTIVE	SOIC	D	16	40	Green (RoHS & no Sb/Br)	CU NIPDAU	Level-1-260C-UNLIM	0 to 70	LS365A	Samples
SN74LS365AD	ACTIVE	SOIC	D	16	40	Green (RoHS & no Sb/Br)	CU NIPDAU	Level-1-260C-UNLIM	0 to 70	LS365A	Samples
SN74LS365ADR	ACTIVE	SOIC	D	16	2500	Green (RoHS & no Sb/Br)	CU NIPDAU	Level-1-260C-UNLIM	0 to 70	LS365A	Samples
SN74LS365ADR	ACTIVE	SOIC	D	16	2500	Green (RoHS & no Sb/Br)	CU NIPDAU	Level-1-260C-UNLIM	0 to 70	LS365A	Samples
SN74LS365AN	ACTIVE	PDIP	N	16	25	Pb-Free (RoHS)	CU NIPDAU	N / A for Pkg Type	0 to 70	SN74LS365AN	Samples
SN74LS365AN	ACTIVE	PDIP	N	16	25	Pb-Free (RoHS)	CU NIPDAU	N / A for Pkg Type	0 to 70	SN74LS365AN	Samples
SN74LS365AN3	OBSOLETE	PDIP	N	16		TBD	Call TI	Call TI	0 to 70		
SN74LS365AN3	OBSOLETE	PDIP	N	16		TBD	Call TI	Call TI	0 to 70		
SN74LS365ANSR	ACTIVE	SO	NS	16	2000	Green (RoHS & no Sb/Br)	CU NIPDAU	Level-1-260C-UNLIM	0 to 70	74LS365A	Samples
SN74LS365ANSR	ACTIVE	SO	NS	16	2000	Green (RoHS & no Sb/Br)	CU NIPDAU	Level-1-260C-UNLIM	0 to 70	74LS365A	Samples
SN74LS366AD	OBSOLETE	SOIC	D	16		TBD	Call TI	Call TI	0 to 70		
SN74LS366AD	OBSOLETE	SOIC	D	16		TBD	Call TI	Call TI	0 to 70		
SN74LS366ADR	OBSOLETE	SOIC	D	16		TBD	Call TI	Call TI	0 to 70		
SN74LS366ADR	OBSOLETE	SOIC	D	16		TBD	Call TI	Call TI	0 to 70		
SN74LS366AN	OBSOLETE	PDIP	N	16		TBD	Call TI	Call TI	0 to 70		
SN74LS366AN	OBSOLETE	PDIP	N	16		TBD	Call TI	Call TI	0 to 70		
SN74LS367AD	ACTIVE	SOIC	D	16	40	Green (RoHS & no Sb/Br)	CU NIPDAU	Level-1-260C-UNLIM	0 to 70	LS367A	Samples
SN74LS367AD	ACTIVE	SOIC	D	16	40	Green (RoHS & no Sb/Br)	CU NIPDAU	Level-1-260C-UNLIM	0 to 70	LS367A	Samples
SN74LS367ADR	ACTIVE	SOIC	D	16	2500	Green (RoHS & no Sb/Br)	CU NIPDAU	Level-1-260C-UNLIM	0 to 70	LS367A	Samples
SN74LS367ADR	ACTIVE	SOIC	D	16	2500	Green (RoHS & no Sb/Br)	CU NIPDAU	Level-1-260C-UNLIM	0 to 70	LS367A	Samples

Orderable Device	Status (1)	Package Type	Package Drawing	Pins	Package Qty	Eco Plan (2)	Lead/Ball Finish (6)	MSL Peak Temp (3)	Op Temp (°C)	Device Marking (4/5)	Samples
SN74LS367AJ	OBSOLETE	CDIP	J	16		TBD	Call TI	Call TI	0 to 70		
SN74LS367AJ	OBSOLETE	CDIP	J	16		TBD	Call TI	Call TI	0 to 70		
SN74LS367AN	ACTIVE	PDIP	N	16	25	Pb-Free (RoHS)	CU NIPDAU	N / A for Pkg Type	0 to 70	SN74LS367AN	Samples
SN74LS367AN	ACTIVE	PDIP	N	16	25	Pb-Free (RoHS)	CU NIPDAU	N / A for Pkg Type	0 to 70	SN74LS367AN	Samples
SN74LS367AN3	OBSOLETE	PDIP	N	16		TBD	Call TI	Call TI	0 to 70		
SN74LS367AN3	OBSOLETE	PDIP	N	16		TBD	Call TI	Call TI	0 to 70		
SN74LS367ANE4	ACTIVE	PDIP	N	16	25	Pb-Free (RoHS)	CU NIPDAU	N / A for Pkg Type	0 to 70	SN74LS367AN	Samples
SN74LS367ANE4	ACTIVE	PDIP	N	16	25	Pb-Free (RoHS)	CU NIPDAU	N / A for Pkg Type	0 to 70	SN74LS367AN	Samples
SN74LS367ANSR	ACTIVE	SO	NS	16	2000	Green (RoHS & no Sb/Br)	CU NIPDAU	Level-1-260C-UNLIM	0 to 70	74LS367A	Samples
SN74LS367ANSR	ACTIVE	SO	NS	16	2000	Green (RoHS & no Sb/Br)	CU NIPDAU	Level-1-260C-UNLIM	0 to 70	74LS367A	Samples
SN74LS368AD	ACTIVE	SOIC	D	16	40	Green (RoHS & no Sb/Br)	CU NIPDAU	Level-1-260C-UNLIM	0 to 70	LS368A	Samples
SN74LS368AD	ACTIVE	SOIC	D	16	40	Green (RoHS & no Sb/Br)	CU NIPDAU	Level-1-260C-UNLIM	0 to 70	LS368A	Samples
SN74LS368ADG4	ACTIVE	SOIC	D	16	40	Green (RoHS & no Sb/Br)	CU NIPDAU	Level-1-260C-UNLIM	0 to 70	LS368A	Samples
SN74LS368ADG4	ACTIVE	SOIC	D	16	40	Green (RoHS & no Sb/Br)	CU NIPDAU	Level-1-260C-UNLIM	0 to 70	LS368A	Samples
SN74LS368ADR	ACTIVE	SOIC	D	16	2500	Green (RoHS & no Sb/Br)	CU NIPDAU	Level-1-260C-UNLIM	0 to 70	LS368A	Samples
SN74LS368ADR	ACTIVE	SOIC	D	16	2500	Green (RoHS & no Sb/Br)	CU NIPDAU	Level-1-260C-UNLIM	0 to 70	LS368A	Samples
SN74LS368AJ	OBSOLETE	CDIP	J	16		TBD	Call TI	Call TI	0 to 70		
SN74LS368AJ	OBSOLETE	CDIP	J	16		TBD	Call TI	Call TI	0 to 70		
SN74LS368AN	ACTIVE	PDIP	N	16	25	Pb-Free (RoHS)	CU NIPDAU	N / A for Pkg Type	0 to 70	SN74LS368AN	Samples
SN74LS368AN	ACTIVE	PDIP	N	16	25	Pb-Free (RoHS)	CU NIPDAU	N / A for Pkg Type	0 to 70	SN74LS368AN	Samples
SN74LS368AN3	OBSOLETE	PDIP	N	16		TBD	Call TI	Call TI	0 to 70		

Orderable Device	Status (1)	Package Type	Package Drawing	Pins	Package Qty	Eco Plan (2)	Lead/Ball Finish (6)	MSL Peak Temp (3)	Op Temp (°C)	Device Marking (4/5)	Samples
SN74LS368AN3	OBSOLETE	PDIP	N	16		TBD	Call TI	Call TI	0 to 70		
SN74LS368ANE4	ACTIVE	PDIP	N	16	25	Pb-Free (RoHS)	CU NIPDAU	N / A for Pkg Type	0 to 70	SN74LS368AN	Samples
SN74LS368ANE4	ACTIVE	PDIP	N	16	25	Pb-Free (RoHS)	CU NIPDAU	N / A for Pkg Type	0 to 70	SN74LS368AN	Samples
SN74LS368ANSR	ACTIVE	SO	NS	16	2000	Green (RoHS & no Sb/Br)	CU NIPDAU	Level-1-260C-UNLIM	0 to 70	74LS368A	Samples
SN74LS368ANSR	ACTIVE	SO	NS	16	2000	Green (RoHS & no Sb/Br)	CU NIPDAU	Level-1-260C-UNLIM	0 to 70	74LS368A	Samples
SNJ54365AJ	OBSOLETE	CDIP	J	16		TBD	Call TI	Call TI	-55 to 125		
SNJ54365AJ	OBSOLETE	CDIP	J	16		TBD	Call TI	Call TI	-55 to 125		
SNJ54366AJ	OBSOLETE	CDIP	J	16		TBD	Call TI	Call TI	-55 to 125	5962-9687802QE A SNJ54366AJ	
SNJ54366AJ	OBSOLETE	CDIP	J	16		TBD	Call TI	Call TI	-55 to 125	5962-9687802QE A SNJ54366AJ	
SNJ54366AW	OBSOLETE	CFP	W	16		TBD	Call TI	Call TI	-55 to 125	5962-9687802QF A SNJ54366AW	
SNJ54366AW	OBSOLETE	CFP	W	16		TBD	Call TI	Call TI	-55 to 125	5962-9687802QF A SNJ54366AW	
SNJ54367AJ	OBSOLETE	CDIP	J	16		TBD	Call TI	Call TI	-55 to 125		
SNJ54367AJ	OBSOLETE	CDIP	J	16		TBD	Call TI	Call TI	-55 to 125		
SNJ54367AW	OBSOLETE	CFP	W	16		TBD	Call TI	Call TI	-55 to 125		
SNJ54367AW	OBSOLETE	CFP	W	16		TBD	Call TI	Call TI	-55 to 125		
SNJ54368AJ	OBSOLETE	CDIP	J	16		TBD	Call TI	Call TI	-55 to 125		
SNJ54368AJ	OBSOLETE	CDIP	J	16		TBD	Call TI	Call TI	-55 to 125		
SNJ54368AW	OBSOLETE	CFP	W	16		TBD	Call TI	Call TI	-55 to 125		
SNJ54368AW	OBSOLETE	CFP	W	16		TBD	Call TI	Call TI	-55 to 125		
SNJ54LS365AFK	ACTIVE	LCCC	FK	20	1	TBD	POST-PLATE	N / A for Pkg Type	-55 to 125	SNJ54LS 365AFK	Samples
SNJ54LS365AFK	ACTIVE	LCCC	FK	20	1	TBD	POST-PLATE	N / A for Pkg Type	-55 to 125	SNJ54LS 365AFK	Samples

Orderable Device	Status (1)	Package Type	Package Drawing	Pins	Package Qty	Eco Plan (2)	Lead/Ball Finish (6)	MSL Peak Temp (3)	Op Temp (°C)	Device Marking (4/5)	Samples
SNJ54LS365AJ	ACTIVE	CDIP	J	16	1	TBD	A42	N / A for Pkg Type	-55 to 125	SNJ54LS365AJ	Samples
SNJ54LS365AJ	ACTIVE	CDIP	J	16	1	TBD	A42	N / A for Pkg Type	-55 to 125	SNJ54LS365AJ	Samples
SNJ54LS365AW	ACTIVE	CFP	W	16	1	TBD	A42	N / A for Pkg Type	-55 to 125	SNJ54LS365AW	Samples
SNJ54LS365AW	ACTIVE	CFP	W	16	1	TBD	A42	N / A for Pkg Type	-55 to 125	SNJ54LS365AW	Samples
SNJ54LS366AFK	ACTIVE	LCCC	FK	20	1	TBD	POST-PLATE	N / A for Pkg Type	-55 to 125	SNJ54LS 366AFK	Samples
SNJ54LS366AFK	ACTIVE	LCCC	FK	20	1	TBD	POST-PLATE	N / A for Pkg Type	-55 to 125	SNJ54LS 366AFK	Samples
SNJ54LS366AJ	ACTIVE	CDIP	J	16	1	TBD	A42	N / A for Pkg Type	-55 to 125	SNJ54LS366AJ	Samples
SNJ54LS366AJ	ACTIVE	CDIP	J	16	1	TBD	A42	N / A for Pkg Type	-55 to 125	SNJ54LS366AJ	Samples
SNJ54LS366AW	ACTIVE	CFP	W	16	1	TBD	A42	N / A for Pkg Type	-55 to 125	SNJ54LS366AW	Samples
SNJ54LS366AW	ACTIVE	CFP	W	16	1	TBD	A42	N / A for Pkg Type	-55 to 125	SNJ54LS366AW	Samples
SNJ54LS367AFK	ACTIVE	LCCC	FK	20	1	TBD	POST-PLATE	N / A for Pkg Type	-55 to 125	SNJ54LS 367AFK	Samples
SNJ54LS367AFK	ACTIVE	LCCC	FK	20	1	TBD	POST-PLATE	N / A for Pkg Type	-55 to 125	SNJ54LS 367AFK	Samples
SNJ54LS367AJ	ACTIVE	CDIP	J	16	1	TBD	A42	N / A for Pkg Type	-55 to 125	SNJ54LS367AJ	Samples
SNJ54LS367AJ	ACTIVE	CDIP	J	16	1	TBD	A42	N / A for Pkg Type	-55 to 125	SNJ54LS367AJ	Samples
SNJ54LS367AW	ACTIVE	CFP	W	16	1	TBD	A42	N / A for Pkg Type	-55 to 125	SNJ54LS367AW	Samples
SNJ54LS367AW	ACTIVE	CFP	W	16	1	TBD	A42	N / A for Pkg Type	-55 to 125	SNJ54LS367AW	Samples
SNJ54LS368AFK	ACTIVE	LCCC	FK	20	1	TBD	POST-PLATE	N / A for Pkg Type	-55 to 125	SNJ54LS 368AFK	Samples
SNJ54LS368AFK	ACTIVE	LCCC	FK	20	1	TBD	POST-PLATE	N / A for Pkg Type	-55 to 125	SNJ54LS 368AFK	Samples
SNJ54LS368AJ	ACTIVE	CDIP	J	16	1	TBD	A42	N / A for Pkg Type	-55 to 125	SNJ54LS368AJ	Samples
SNJ54LS368AJ	ACTIVE	CDIP	J	16	1	TBD	A42	N / A for Pkg Type	-55 to 125	SNJ54LS368AJ	Samples

Orderable Device	Status (1)	Package Type	Package Drawing	Pins	Package Qty	Eco Plan (2)	Lead/Ball Finish (6)	MSL Peak Temp (3)	Op Temp (°C)	Device Marking (4/5)	Samples
SNJ54LS368AW	ACTIVE	CFP	W	16	1	TBD	A42	N / A for Pkg Type	-55 to 125	SNJ54LS368AW	Samples
SNJ54LS368AW	ACTIVE	CFP	W	16	1	TBD	A42	N / A for Pkg Type	-55 to 125	SNJ54LS368AW	Samples

(1) The marketing status values are defined as follows:
ACTIVE: Product device recommended for new designs.
LIFEBUY: TI has announced that the device will be discontinued, and a lifetime-buy period is in effect.
NRND: Not recommended for new designs. Device is in production to support existing customers, but TI does not recommend using this part in a new design.
PREVIEW: Device has been announced but is not in production. Samples may or may not be available.
OBSOLETE: TI has discontinued the production of the device.

(2) Eco Plan - The planned eco-friendly classification: Pb-Free (RoHS), Pb-Free (RoHS Exempt), or Green (RoHS & no Sb/Br) - please check http://www.ti.com/productcontent for the latest availability information and additional product content details.
TBD: The Pb-Free/Green conversion plan has not been defined.
Pb-Free (RoHS): TI's terms "Lead-Free" or "Pb-Free" mean semiconductor products that are compatible with the current RoHS requirements for all 6 substances, including the requirement that lead not exceed 0.1% by weight in homogeneous materials. Where designed to be soldered at high temperatures, TI Pb-Free products are suitable for use in specified lead-free processes.
Pb-Free (RoHS Exempt): This component has a RoHS exemption for either 1) lead-based flip-chip solder bumps used between the die and package, or 2) lead-based die adhesive used between the die and leadframe. The component is otherwise considered Pb-Free (RoHS compatible) as defined above.
Green (RoHS & no Sb/Br): TI defines "Green" to mean Pb-Free (RoHS compatible), and free of Bromine (Br) and Antimony (Sb) based flame retardants (Br or Sb do not exceed 0.1% by weight in homogeneous material)

(3) MSL, Peak Temp. - The Moisture Sensitivity Level rating according to the JEDEC industry standard classifications, and peak solder temperature.

(4) There may be additional marking, which relates to the logo, the lot trace code information, or the environmental category on the device.

(5) Multiple Device Markings will be inside parentheses. Only one Device Marking contained in parentheses and separated by a "~" will appear on a device. If a line is indented then it is a continuation of the previous line and the two combined represent the entire Device Marking for that device.

(6) Lead/Ball Finish - Orderable Devices may have multiple material finish options. Finish options are separated by a vertical ruled line. Lead/Ball Finish values may wrap to two lines if the finish value exceeds the maximum column width.

Important Information and Disclaimer: The information provided on this page represents TI's knowledge and belief as of the date that it is provided. TI bases its knowledge and belief on information provided by third parties, and makes no representation or warranty as to the accuracy of such information. Efforts are underway to better integrate information from third parties. TI has taken and continues to take reasonable steps to provide representative and accurate information but may not have conducted destructive testing or chemical analysis on incoming materials and chemicals. TI and TI suppliers consider certain information to be proprietary, and thus CAS numbers and other limited information may not be available for release.

In no event shall TI's liability arising out of such information exceed the total purchase price of the TI part(s) at issue in this document sold by TI to Customer on an annual basis.

OTHER QUALIFIED VERSIONS OF SN54365A, SN54366A, SN54367A, SN54368A, SN54LS365A, SN54LS366A, SN54LS367A, SN54LS367A-SP, SN54LS368A, SN74365A, SN74366A, SN74367A, SN74368A, SN74LS365A, SN74LS366A, SN74LS367A, SN74LS368A :

- Catalog: SN74365A, SN74366A, SN74367A, SN74368A, SN74LS365A, SN74LS366A, SN74LS367A, SN54LS367A, SN74LS368A
- Military: SN54365A, SN54366A, SN54367A, SN54368A, SN54LS365A, SN54LS366A, SN54LS367A, SN54LS368A
- Space: SN54LS367A-SP

NOTE: Qualified Version Definitions:

- Catalog - TI's standard catalog product
- Military - QML certified for Military and Defense Applications
- Space - Radiation tolerant, ceramic packaging and qualified for use in Space-based application

TAPE AND REEL INFORMATION

REEL DIMENSIONS

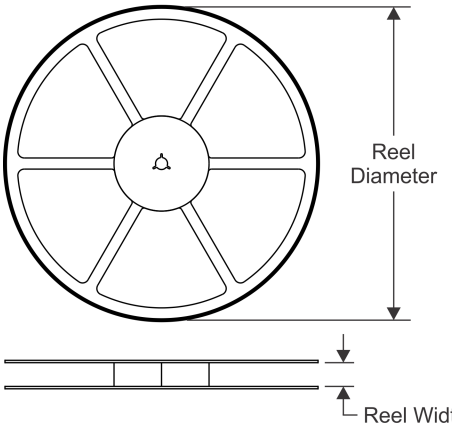

TAPE DIMENSIONS

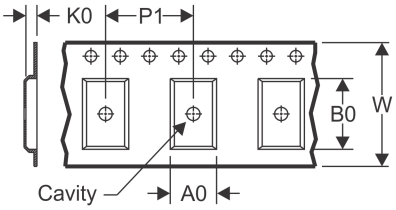

A0	Dimension designed to accommodate the component width
B0	Dimension designed to accommodate the component length
K0	Dimension designed to accommodate the component thickness
W	Overall width of the carrier tape
P1	Pitch between successive cavity centers

QUADRANT ASSIGNMENTS FOR PIN 1 ORIENTATION IN TAPE

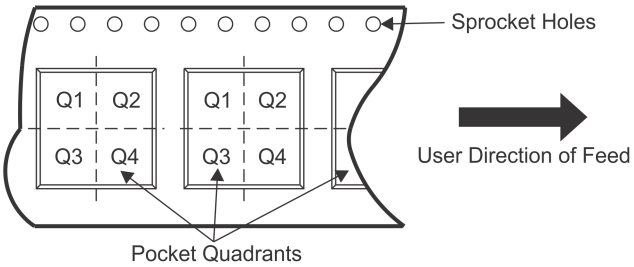

*All dimensions are nominal

Device	Package Type	Package Drawing	Pins	SPQ	Reel Diameter (mm)	Reel Width W1 (mm)	A0 (mm)	B0 (mm)	K0 (mm)	P1 (mm)	W (mm)	Pin1 Quadrant
SN74LS365ADR	SOIC	D	16	2500	330.0	16.4	6.5	10.3	2.1	8.0	16.0	Q1
SN74LS365ANSR	SO	NS	16	2000	330.0	16.4	8.2	10.5	2.5	12.0	16.0	Q1
SN74LS367ADR	SOIC	D	16	2500	330.0	16.4	6.5	10.3	2.1	8.0	16.0	Q1
SN74LS368ADR	SOIC	D	16	2500	330.0	16.4	6.5	10.3	2.1	8.0	16.0	Q1
SN74LS368ANSR	SO	NS	16	2000	330.0	16.4	8.2	10.5	2.5	12.0	16.0	Q1

TAPE AND REEL BOX DIMENSIONS

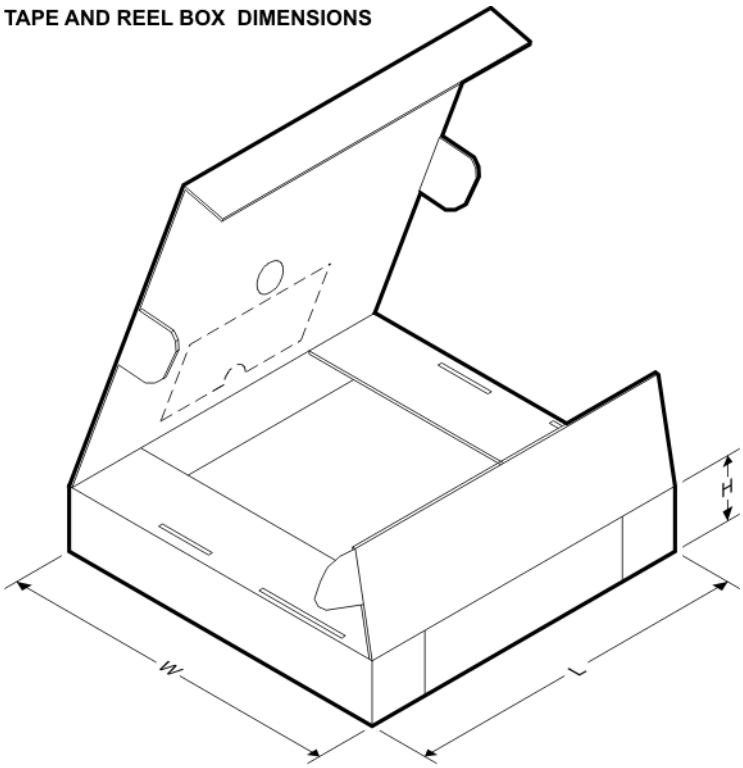

*All dimensions are nominal

Device	Package Type	Package Drawing	Pins	SPQ	Length (mm)	Width (mm)	Height (mm)
SN74LS365ADR	SOIC	D	16	2500	333.2	345.9	28.6
SN74LS365ANSR	SO	NS	16	2000	367.0	367.0	38.0
SN74LS367ADR	SOIC	D	16	2500	333.2	345.9	28.6
SN74LS368ADR	SOIC	D	16	2500	333.2	345.9	28.6
SN74LS368ANSR	SO	NS	16	2000	367.0	367.0	38.0

J (R–GDIP–T**) CERAMIC DUAL IN–LINE PACKAGE

14 LEADS SHOWN

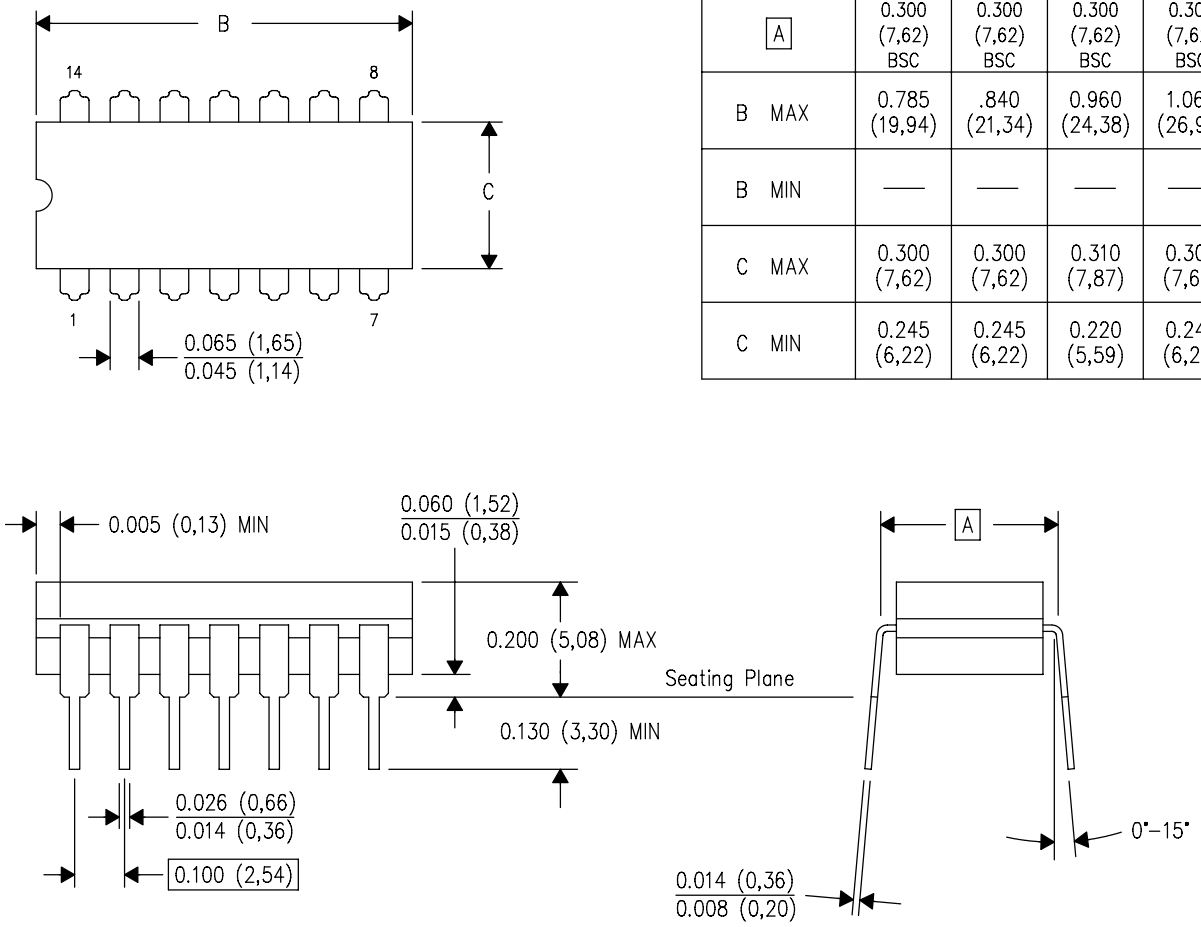

DIM \ PINS **	14	16	18	20
A	0.300 (7,62) BSC	0.300 (7,62) BSC	0.300 (7,62) BSC	0.300 (7,62) BSC
B MAX	0.785 (19,94)	.840 (21,34)	0.960 (24,38)	1.060 (26,92)
B MIN	—	—	—	—
C MAX	0.300 (7,62)	0.300 (7,62)	0.310 (7,87)	0.300 (7,62)
C MIN	0.245 (6,22)	0.245 (6,22)	0.220 (5,59)	0.245 (6,22)

4040083/F 03/03

NOTES:
- A. All linear dimensions are in inches (millimeters).
- B. This drawing is subject to change without notice.
- C. This package is hermetically sealed with a ceramic lid using glass frit.
- D. Index point is provided on cap for terminal identification only on press ceramic glass frit seal only.
- E. Falls within MIL STD 1835 GDIP1–T14, GDIP1–T16, GDIP1–T18 and GDIP1–T20.

W (R–GDFP–F16) CERAMIC DUAL FLATPACK

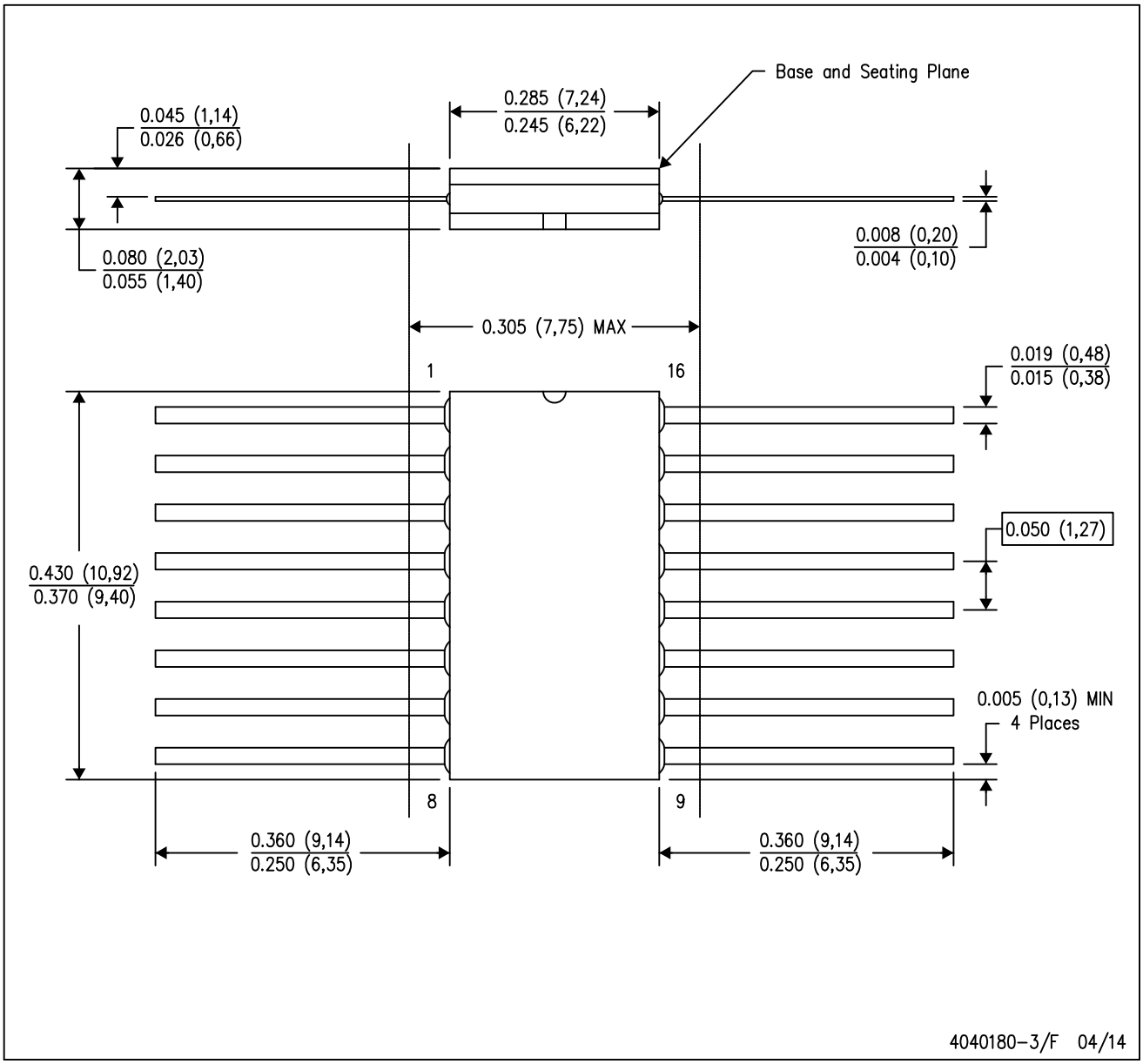

NOTES:
A. All linear dimensions are in inches (millimeters).
B. This drawing is subject to change without notice.
C. This package can be hermetically sealed with a ceramic lid using glass frit.
D. Index point is provided on cap for terminal identification only.
E. Falls within MIL STD 1835 GDFP2–F16

FK (S–CQCC–N**) LEADLESS CERAMIC CHIP CARRIER

28 TERMINAL SHOWN

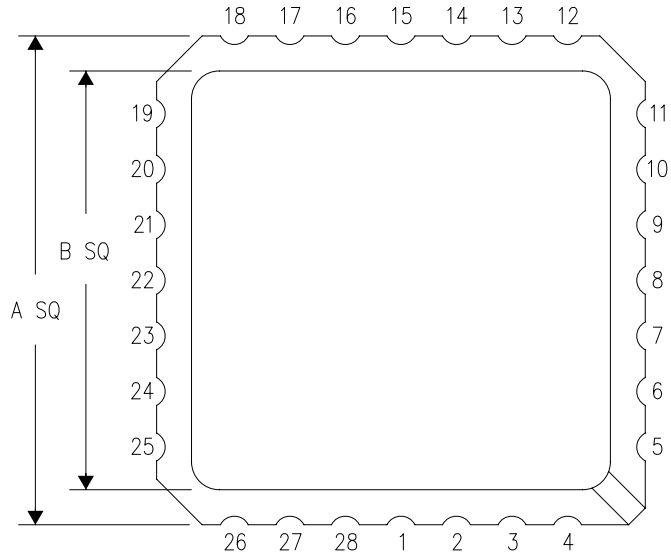

NO. OF TERMINALS **	A		B	
	MIN	MAX	MIN	MAX
20	0.342 (8,69)	0.358 (9,09)	0.307 (7,80)	0.358 (9,09)
28	0.442 (11,23)	0.458 (11,63)	0.406 (10,31)	0.458 (11,63)
44	0.640 (16,26)	0.660 (16,76)	0.495 (12,58)	0.560 (14,22)
52	0.740 (18,78)	0.761 (19,32)	0.495 (12,58)	0.560 (14,22)
68	0.938 (23,83)	0.962 (24,43)	0.850 (21,6)	0.858 (21,8)
84	1.141 (28,99)	1.165 (29,59)	1.047 (26,6)	1.063 (27,0)

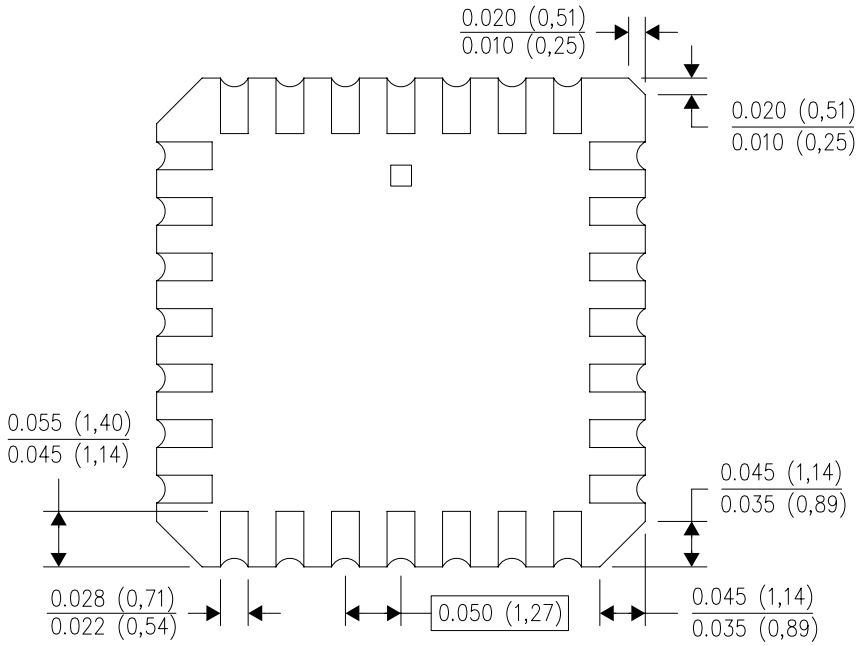

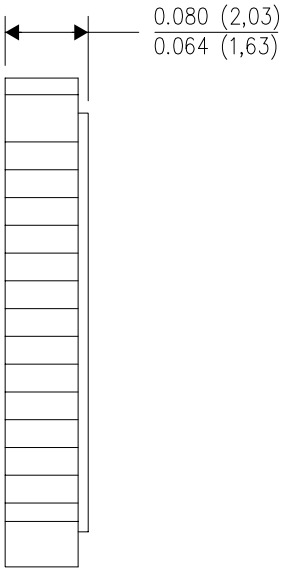

4040140/D 01/11

NOTES:
A. All linear dimensions are in inches (millimeters).
B. This drawing is subject to change without notice.
C. This package can be hermetically sealed with a metal lid.
D. Falls within JEDEC MS–004

N (R–PDIP–T**) PLASTIC DUAL–IN–LINE PACKAGE

16 PINS SHOWN

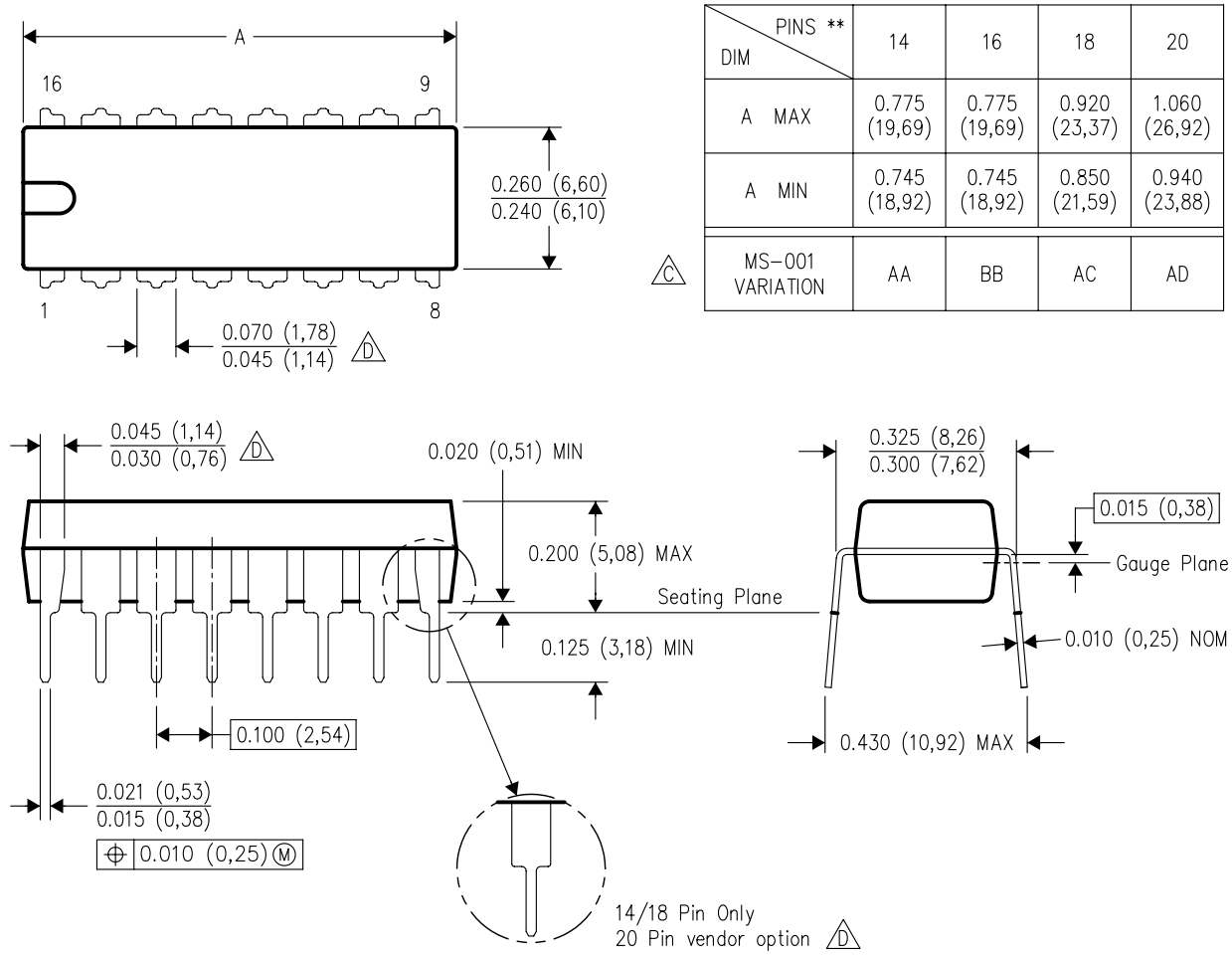

DIM \ PINS **	14	16	18	20
A MAX	0.775 (19,69)	0.775 (19,69)	0.920 (23,37)	1.060 (26,92)
A MIN	0.745 (18,92)	0.745 (18,92)	0.850 (21,59)	0.940 (23,88)
MS–001 VARIATION (C)	AA	BB	AC	AD

NOTES:
A. All linear dimensions are in inches (millimeters).
B. This drawing is subject to change without notice.
C. Falls within JEDEC MS–001, except 18 and 20 pin minimum body length (Dim A).
D. The 20 pin end lead shoulder width is a vendor option, either half or full width.

D (R–PDSO–G16) PLASTIC SMALL OUTLINE

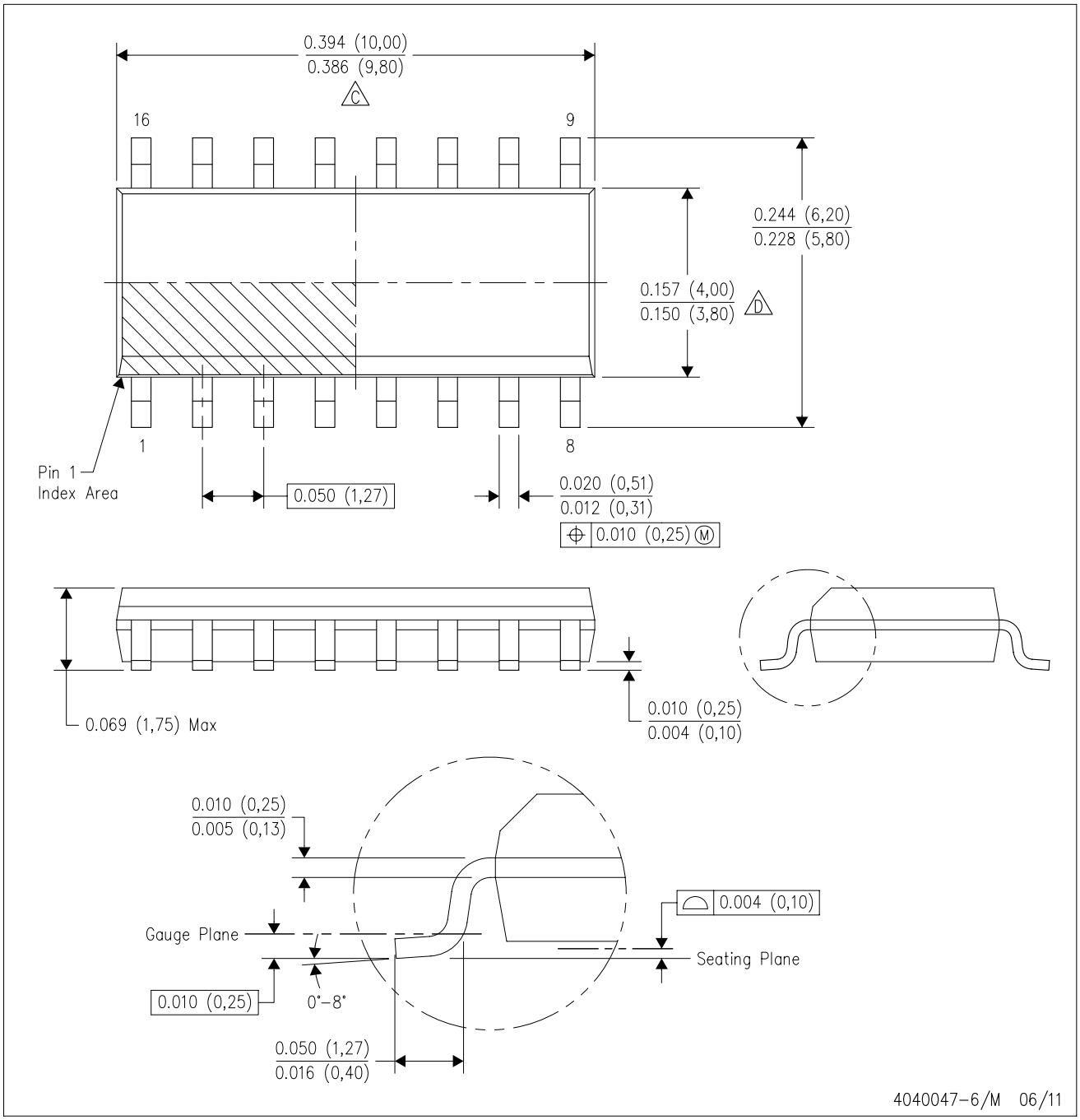

NOTES:
A. All linear dimensions are in inches (millimeters).
B. This drawing is subject to change without notice.
C. Body length does not include mold flash, protrusions, or gate burrs. Mold flash, protrusions, or gate burrs shall not exceed 0.006 (0,15) each side.
D. Body width does not include interlead flash. Interlead flash shall not exceed 0.017 (0,43) each side.
E. Reference JEDEC MS–012 variation AC.

MECHANICAL DATA

NS (R-PDSO-G)** **PLASTIC SMALL-OUTLINE PACKAGE**

14-PINS SHOWN

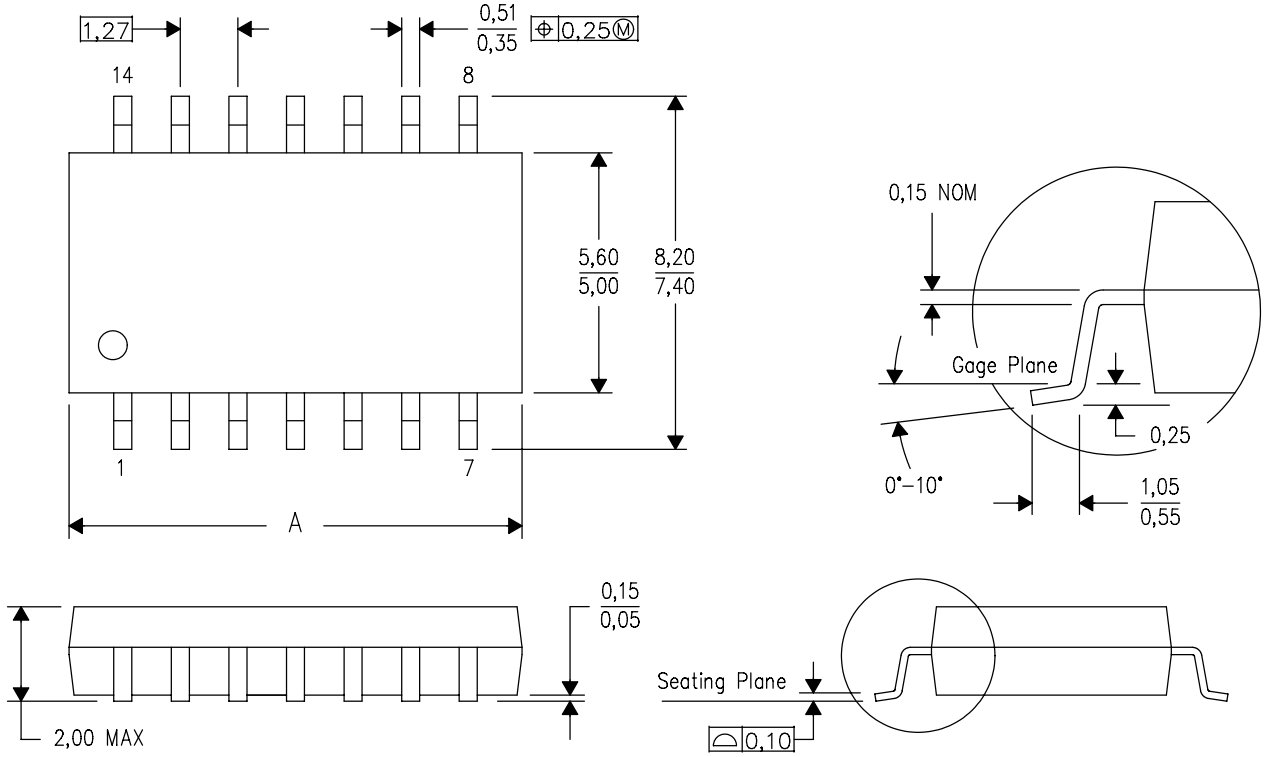

DIM \ PINS **	14	16	20	24
A MAX	10,50	10,50	12,90	15,30
A MIN	9,90	9,90	12,30	14,70

4040062/C 03/03

NOTES:
A. All linear dimensions are in millimeters.
B. This drawing is subject to change without notice.
C. Body dimensions do not include mold flash or protrusion, not to exceed 0,15.

IMPORTANT NOTICE

Texas Instruments Incorporated and its subsidiaries (TI) reserve the right to make corrections, enhancements, improvements and other changes to its semiconductor products and services per JESD46, latest issue, and to discontinue any product or service per JESD48, latest issue. Buyers should obtain the latest relevant information before placing orders and should verify that such information is current and complete. All semiconductor products (also referred to herein as “components”) are sold subject to TI’s terms and conditions of sale supplied at the time of order acknowledgment.

TI warrants performance of its components to the specifications applicable at the time of sale, in accordance with the warranty in TI’s terms and conditions of sale of semiconductor products. Testing and other quality control techniques are used to the extent TI deems necessary to support this warranty. Except where mandated by applicable law, testing of all parameters of each component is not necessarily performed.

TI assumes no liability for applications assistance or the design of Buyers’ products. Buyers are responsible for their products and applications using TI components. To minimize the risks associated with Buyers’ products and applications, Buyers should provide adequate design and operating safeguards.

TI does not warrant or represent that any license, either express or implied, is granted under any patent right, copyright, mask work right, or other intellectual property right relating to any combination, machine, or process in which TI components or services are used. Information published by TI regarding third-party products or services does not constitute a license to use such products or services or a warranty or endorsement thereof. Use of such information may require a license from a third party under the patents or other intellectual property of the third party, or a license from TI under the patents or other intellectual property of TI.

Reproduction of significant portions of TI information in TI data books or data sheets is permissible only if reproduction is without alteration and is accompanied by all associated warranties, conditions, limitations, and notices. TI is not responsible or liable for such altered documentation. Information of third parties may be subject to additional restrictions.

Resale of TI components or services with statements different from or beyond the parameters stated by TI for that component or service voids all express and any implied warranties for the associated TI component or service and is an unfair and deceptive business practice. TI is not responsible or liable for any such statements.

Buyer acknowledges and agrees that it is solely responsible for compliance with all legal, regulatory and safety-related requirements concerning its products, and any use of TI components in its applications, notwithstanding any applications-related information or support that may be provided by TI. Buyer represents and agrees that it has all the necessary expertise to create and implement safeguards which anticipate dangerous consequences of failures, monitor failures and their consequences, lessen the likelihood of failures that might cause harm and take appropriate remedial actions. Buyer will fully indemnify TI and its representatives against any damages arising out of the use of any TI components in safety-critical applications.

In some cases, TI components may be promoted specifically to facilitate safety-related applications. With such components, TI’s goal is to help enable customers to design and create their own end-product solutions that meet applicable functional safety standards and requirements. Nonetheless, such components are subject to these terms.

No TI components are authorized for use in FDA Class III (or similar life-critical medical equipment) unless authorized officers of the parties have executed a special agreement specifically governing such use.

Only those TI components which TI has specifically designated as military grade or “enhanced plastic” are designed and intended for use in military/aerospace applications or environments. Buyer acknowledges and agrees that any military or aerospace use of TI components which have ***not*** been so designated is solely at the Buyer's risk, and that Buyer is solely responsible for compliance with all legal and regulatory requirements in connection with such use.

TI has specifically designated certain components as meeting ISO/TS16949 requirements, mainly for automotive use. In any case of use of non-designated products, TI will not be responsible for any failure to meet ISO/TS16949.

Products		**Applications**	
Audio	www.ti.com/audio	Automotive and Transportation	www.ti.com/automotive
Amplifiers	amplifier.ti.com	Communications and Telecom	www.ti.com/communications
Data Converters	dataconverter.ti.com	Computers and Peripherals	www.ti.com/computers
DLP® Products	www.dlp.com	Consumer Electronics	www.ti.com/consumer-apps
DSP	dsp.ti.com	Energy and Lighting	www.ti.com/energy
Clocks and Timers	www.ti.com/clocks	Industrial	www.ti.com/industrial
Interface	interface.ti.com	Medical	www.ti.com/medical
Logic	logic.ti.com	Security	www.ti.com/security
Power Mgmt	power.ti.com	Space, Avionics and Defense	www.ti.com/space-avionics-defense
Microcontrollers	microcontroller.ti.com	Video and Imaging	www.ti.com/video
RFID	www.ti-rfid.com		
OMAP Applications Processors	www.ti.com/omap	**TI E2E Community**	e2e.ti.com
Wireless Connectivity	www.ti.com/wirelessconnectivity		

Mailing Address: Texas Instruments, Post Office Box 655303, Dallas, Texas 75265
Copyright © 2014, Texas Instruments Incorporated