THIS DRAWING IS UNPUBLISHED.
DIFFUSION RESTREINTE
© COPYRIGHT copyright_dSYe-
RELEASED FOR PUBLICATION
LIBRE A LA DIFFUSION
ALL RIGHTS RESERVED.
TOUS DROITS RESERVES.

REVISIONS

P	LTR REV	DESCRIPTION MODIFICATIONS	DATE	DWN DESS.	APVD APP.
	A	NEW DRAWING	18AUG2014	MN	XR
	B	DRAWING CORRECTION	02FEB2017	DB	XR

COUPE / SECTION C-C

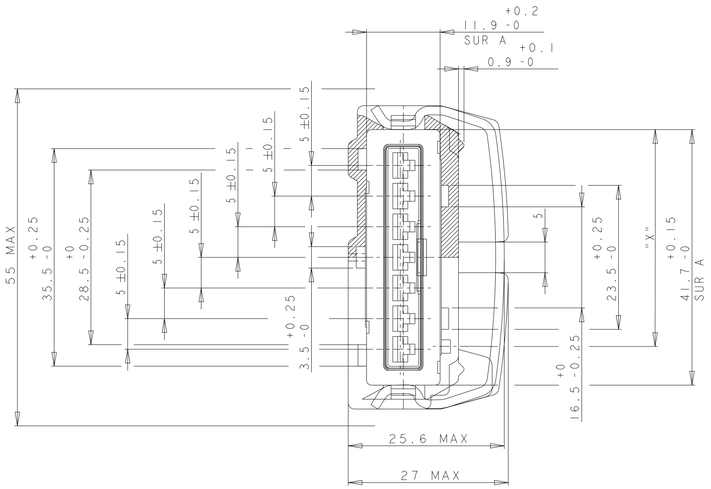

VUE SELON D / VIEW D

PARTIE SUPERIEURE DU PORTE-MODULE SEUL / UPPER SIDE (CARRIER ONLY)

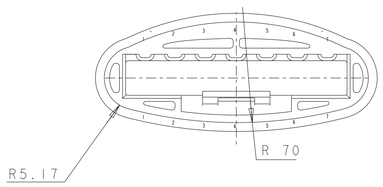

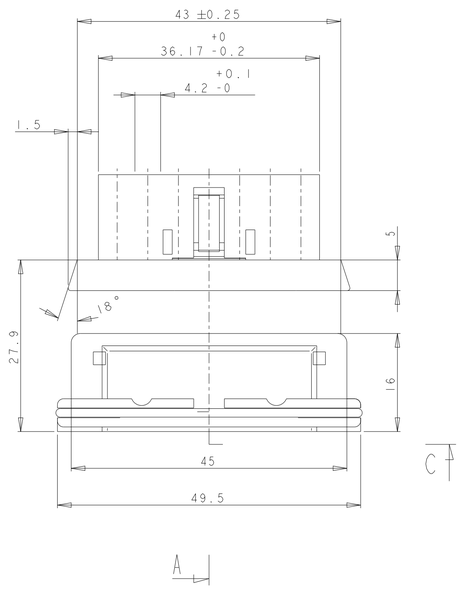

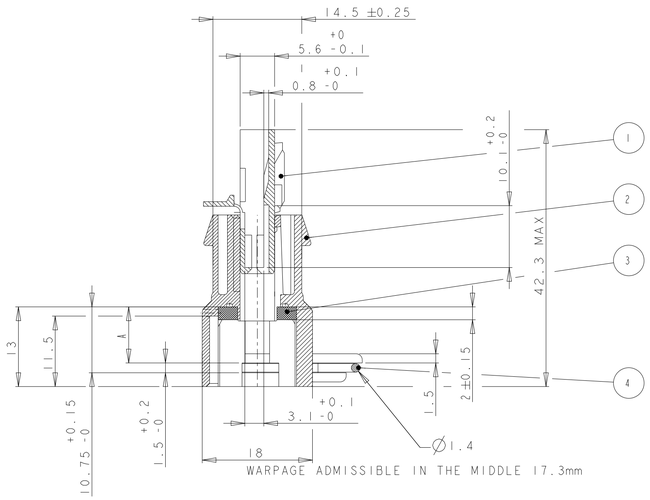

COUPE / SECTION A-A

SPECIFICATION D'UTILISATION / INSTRUCTION SHEET : 411-15500

SPECIFICATION D'EMBALLAGE / PACKING SPECIFICATION : 107.15127

7	6	5	4	3	2	1	COULEUR / COLOR (185884-)	DETROMPAGE / CODING "X"	QTE/QTY	DESCRIPTION	REP.
X	X	X	X	X	X	X	BRUT		1	RESSORT TRAITE: FIL CLAIR (INOX 18/9) LUBRIFICATION TRAIT. THERMIQUE	4
X	X	X	X	X	X	X	NATUREL		1	JOINT / SEAL (SILICONE)	3
X							VIOLET	35.4 / 20.9 / 25.1 / 16.7 / 6.4		PORTE MODULE / CARRIER (PA 6.6 GV20)	2
	X						BLANC / WHITE	35.4	1		
		X					GRIS / GREY	20.9	1		
			X				BLEU / BLUE	25.1	1		
				X			VERT / GREEN	16.7	1		
					X		MARRON / BROWN	6.4	1		
						X	NOIR / BLACK	AUCUN DETROMPAGE	1		
X	X	X	X	X	X	X	VIOLET		1	MODULE 7POS. (PA 6.6) 144470-1	1

THIS DRAWING IS A CONTROLLED DOCUMENT.

DIMENSIONS: mm

TOLERANCES UNLESS OTHERWISE SPECIFIED: TOLERANCES NON SPECIFIEES (SUIV NB DE DECIMALES): 0 PLC/DEC: ±- 1: PLC/DEC: ±0.2 2 PLC/DEC: ±- 3 PLC/DEC: ±- 4 PLC/DEC: ±- ANGLES: ±2°

MATERIAL /MATIERE: SEE TABLE -

FINISH /FINITION: SEE TABLE -

DWN /DESSINE: MADHUSUDHAN N 18AUG2014
CHK /VERIFIE: E. CHATELUS 18AUG2014
APVD /APPROUVE: X. ROUILLARD 18AUG2014
PRODUCT SPEC SPEC. PRODUIT: 108-15074
APPLICATION SPEC SPEC. APPLICATION: 114-15050/51
WEIGHT MASSE APPROX. 14.145g

TE Connectivity

NAME TITRE: CONNECTEUR ETANCHE 7 VOIES POUR JPT
ASSY OF SEALED JPT CONNECTOR 7 POS.

SIZE FORMAT A1 | CAGE CODE 00779 | DRAWING NO No PLAN C-185884 | RESTRICTED TO RESERVE A -

CUSTOMER DRAWING /PLAN CLIENT | UNIQUEMENT POUR REFERENCE | SCALE ECHELLE 2:1 | SHEET FEUILLE 1 OF DE 1 | REV C

4805 (3/13)