THIS DRAWING IS UNPUBLISHED
VERTRAULICHE UNVEROEFFENTLICHE ZEICHNUNG

RELEASE FOR PUBLIKATION ,2000
FREI FUER VEROEFFENTLICHUNG

© COPYRIGHT 2000 BY AMP INCORPORATED ALL RIGHTS RESERVED
ALLE RECHTE VORBEHALTEN

MATED WITH:
PASSEND ZU:

LOC	DIST
AI	-

PROJEKT NR. EGGMN04410

REVISIONS
AENDERUNGEN

P	LTR	DESCRIPTION BESCHREIBUNG	DATE	DWN	APVD
A1		NEW DRAWN	21.02.2006	SR	AG

CONTACT ARRANGEMENT:
VIEW FROM CONNECTING SIDE

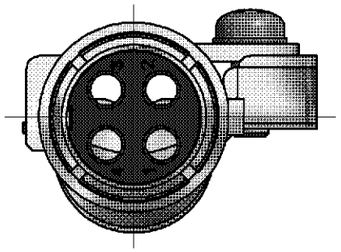

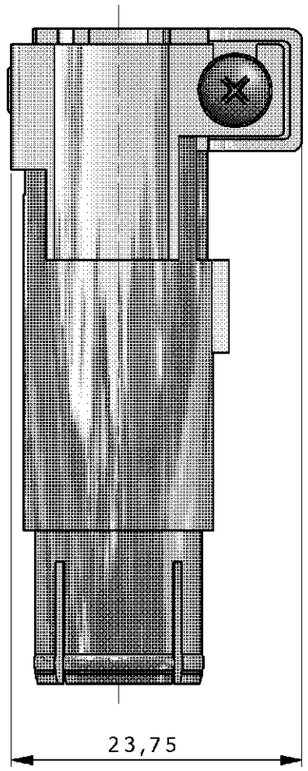

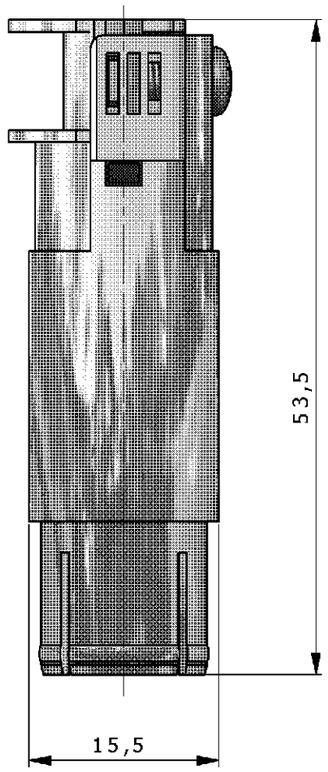

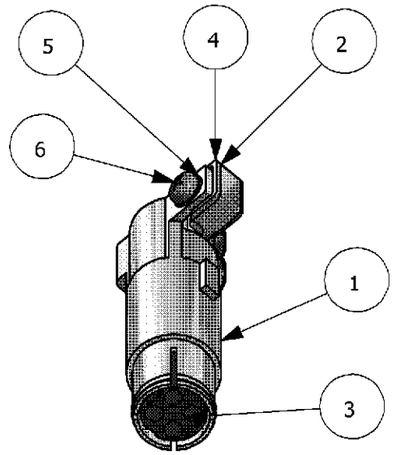

NOTES

1 SUITABLE CRIMP CONTACTS: SERIES HN.D
CUSTOMER DRAWING: 1105051
OUTER DIMENSIONS OF INSULATION: MAX. Ø4 MM

2 SUITABLE MODULE FIXING FRAME: SERIES HVS SIZE 3 TO 8
CUSTOMER DRAWING: 1103250

3 SUITABLE INSERTION TOOL:
CUSTOMER DRAWING: 1102855

4 SUITABLE EXTRACTION TOOL:
CUSTOMER DRAWING: 1102855

5 STANDARDS:
DIN EN 61984; DIN EN 60664-1

6 POLARIZATION RIPS

7 MARKING OF POLARIZATION ACCORDING MARKING OF MODULE FRAME

8 PACKAGING:
10 SETS IN A CARTON, PRE-MOUNTED

QTY.	DESCRIPTION	MATERIAL	SURFACE	COLOR	NOTE	ITEM
1	SCREW	STEEL	-	-	ISO 7045 A2	6
1	SPRING WASHER, A3	STEEL	ZINC PLATED	-	DIN 137	5
1	CLOSING 3-6 MM	ZINC	-	-	-	4
1	CONTACT INSERT FEMALE	PA6.6-GF25	-	BLACK	-	3
1	CLOSING 6-9 MM	ZINC	-	-	-	2
1	SHIELD BARREL FEMALE	ZINC	ZINC PLATED	-	-	1

PARTS LIST

0-1 as shown
HVS-TX.HN.D.4.Bu.C

CONTACT ARRANGEMENT:
VIEW FROM TERMINATION SIDE

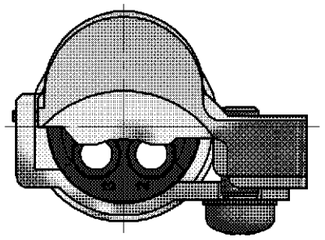

THIS DRAWING IS A CONTROLLED DOCUMENT FOR AMP INCORPORATED. IT IS SUBJECT TO CHANGE AND THE CONTROLLING ENGINEERING ORGANIZATION SHOULD BE CONTACTED FOR THE LATEST REVISION. DIESES ZEICHNUNGSDOKUMENT WIRD DURCH AMP INCORPORATED KONTROLLIERT. AENDERUNGEN, DIE DEM TECHNISCHEN FORTSCHRITT DIENEN, SIND VORBEHALTEN. DEN JEWEILS LETZTGUELTIGEN AENDERUNGSSTAND ERFAHREN SIE AUF ANFRAGE.

DIMENSIONS:
DIMENSIONEN:
mm

TOLERANCES UNLESS OTHERWISE SPECIFIED:
ALLGEMEINTOLERANZEN

n. ISO 8015 -
n. ISO 2768 - mH-E
n. DIN 16901- 140

0 PLC #
1 PLC #
2 PLC #
3 PLC #
ANGLES / WINKEL #

MATERIAL

FINISH / OBERFLAECHE / FARBE

DWN	SCHNEIDER	21.02.2006
CHK	A.GAST	21.02.2006
APVD	T.SCHNURPFEIL	21.02.2006
PRODUCT SPEC. PRODUKTSPEZ.	108-74086	
APPLICATION SPEC. VERARBEITUNGSSPEZ.	114-74088	
WEIGHT GEWICHT	0,001 KG	

tyco Electronics

Tyco / Electronics AMP GmbH
D - 53819 Neunkirchen

NAME
SCHIELD BARREL FEMALE
HVS-TX.HND.4.BU

SIZE	CAGE CODE	DRAWING NO ZEICHNUNGS-NR.	RESTRICTED TO NUR FUER
A3	00779	C- 1103286	

CUSTOMER DRAWING / KUNDENZEICHNUNG

SCALE MASSSTAB	SHEET BLATT	OF VON	REV.
1:1	1	1	A1

This is a TRANSLATED file from
Computervision, Inc,, Medusa Revision 12.2.5T