Alle Rechte vorbehalten/ *All rights reserved*

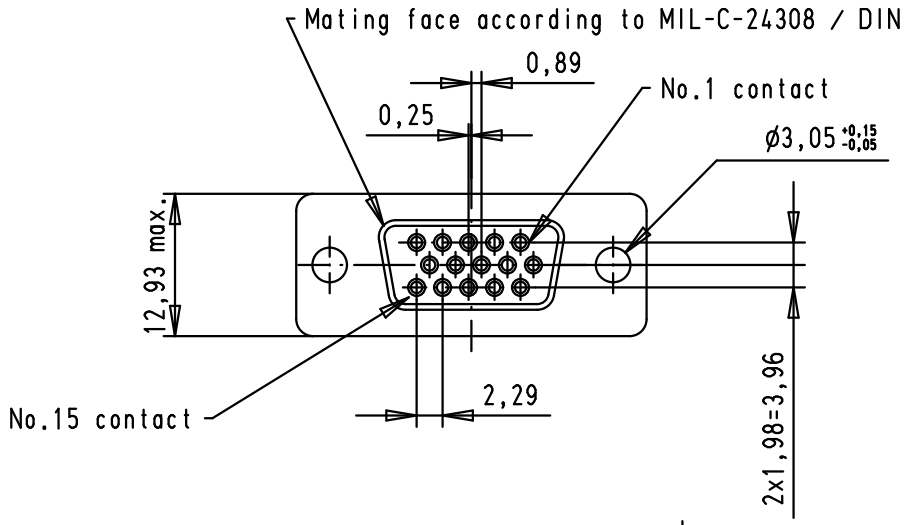

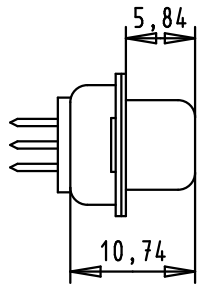

Printed layout component side

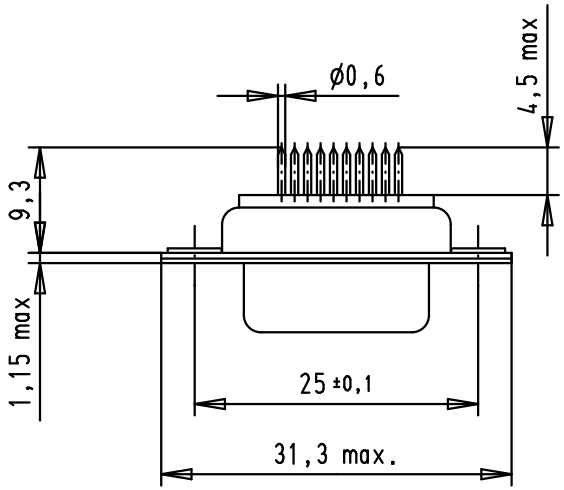

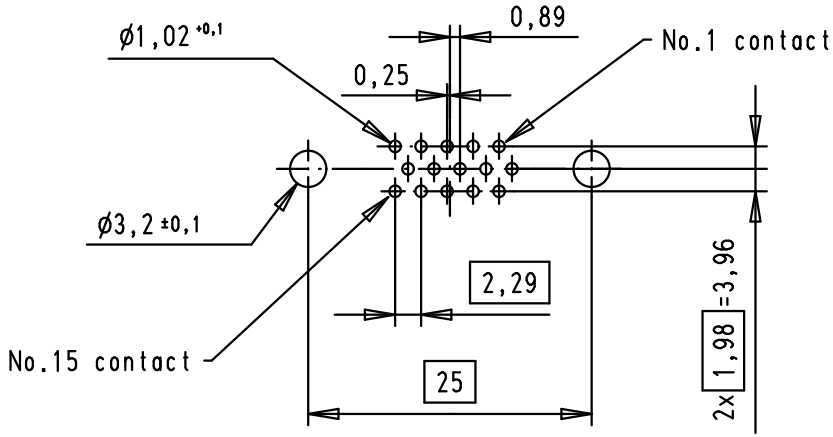

							Dat.	Name	All Dim. in mm Orig. Size DIN A 4	Dsub, 15 poles, female, straight solder pins, through holes	Maßstab/ *Scale*
						Detail.	16-SEP-02	CV			1.5:1
						Insp.					
			36183	13-OCT-10	BH	Stand.					
09561515500	0.76 µm Au		31352	16-OCT-02	*S.H.*	HARTING EURL F-95972 Paris				TB 0956151x500	Blatt/ *Page*
09561517500	3		31064	16-SEP-02	CV						1
Part number	Performance level		Mod.	Dat.	Name					Sub.	