THIS DRAWING IS UNPUBLISHED. RELEASED FOR PUBLICATION -,- .
© COPYRIGHT - By - ALL RIGHTS RESERVED.

LOC	DIST
AF	50

REVISIONS

P	LTR	DESCRIPTION	DATE	DWN	APVD
	E	REVISED PER ECR-12-013459	27NOV2012	KH	PD

1 CONTINUOUS STRIP ON REELS.

2 ACCEPTS [#18-#14] WIRE SIZE.

3 MATING TAB TO BE 0.51±0.025 [.020±.001] THK.

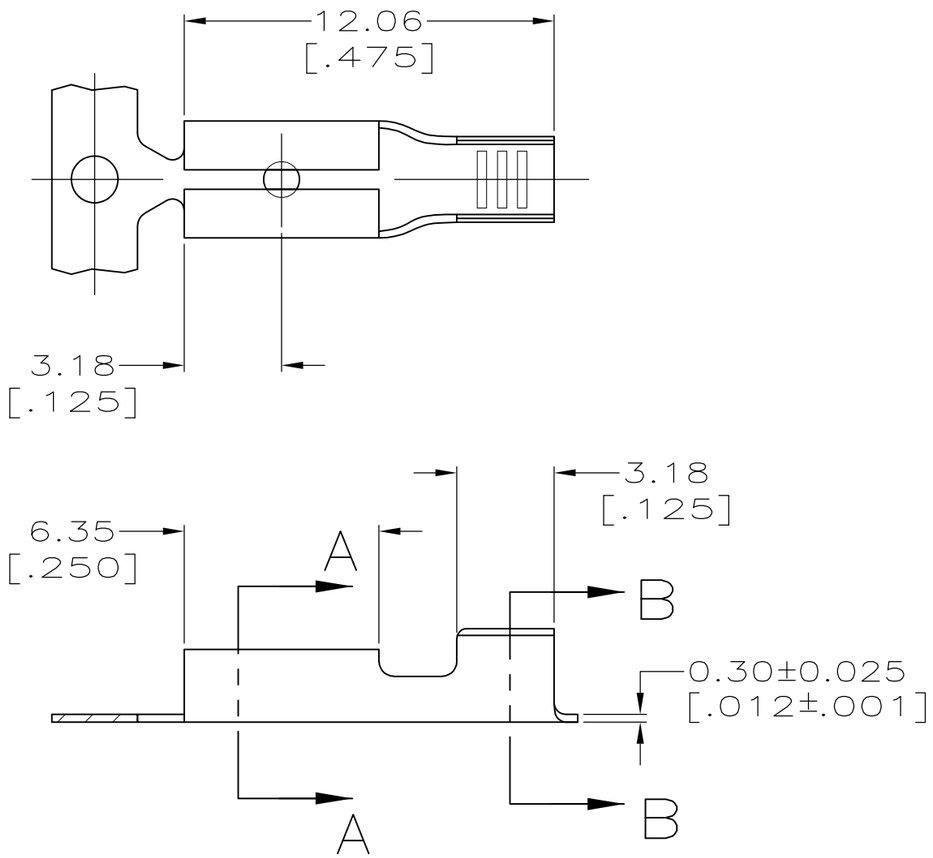

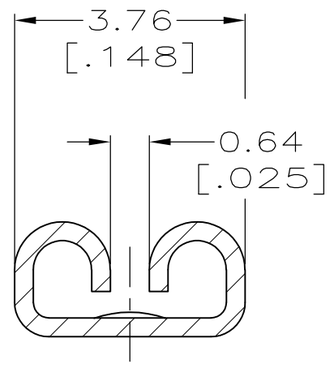

SECTION A-A
SCALE 10:1

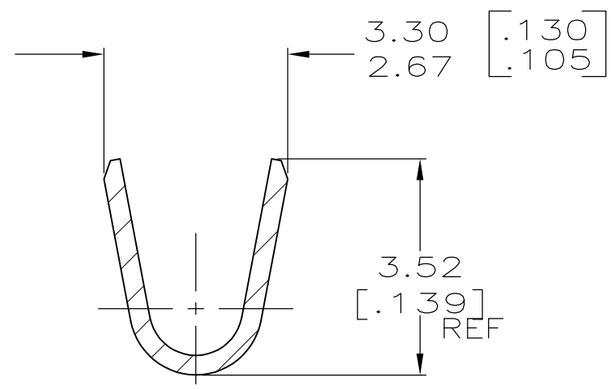

SECTION B-B
SCALE 10:1

62474-1

PART NO.

THIS DRAWING IS A CONTROLLED DOCUMENT.

DIMENSIONS: mm [INCHES]

TOLERANCES UNLESS OTHERWISE SPECIFIED:

0 PLC	± -
1 PLC	± -
2 PLC	± 0.38 [.015]
3 PLC	± -
4 PLC	± -
ANGLES	± -

MATERIAL: BRASS

FINISH: TIN

DWN	JR RUTH	3/14/96
CHK	MS FEHER	3/14/96
APVD	P DESANTIS	3/14/96
PRODUCT SPEC	—	
APPLICATION SPEC	114-2036	
WEIGHT	—	

CUSTOMER DRAWING

TE Connectivity

NAME: RECEPTACLE, FASTON, 2.79 [.110] SERIES

SIZE	CAGE CODE	DRAWING NO	RESTRICTED TO
A3	00779	C-62474	—

SCALE	SHEET	REV
5:1	1 OF 1	E