THIS DRAWING IS UNPUBLISHED. RELEASED FOR PUBLICATION – ,N/A .
© COPYRIGHT N/A By – ALL RIGHTS RESERVED.

LOC	DIST
—	—

REVISIONS

P	LTR	DESCRIPTION	DATE	DWN	APVD
	V	REVISED PER ECO-15-016251	13NOV15	KG	CD

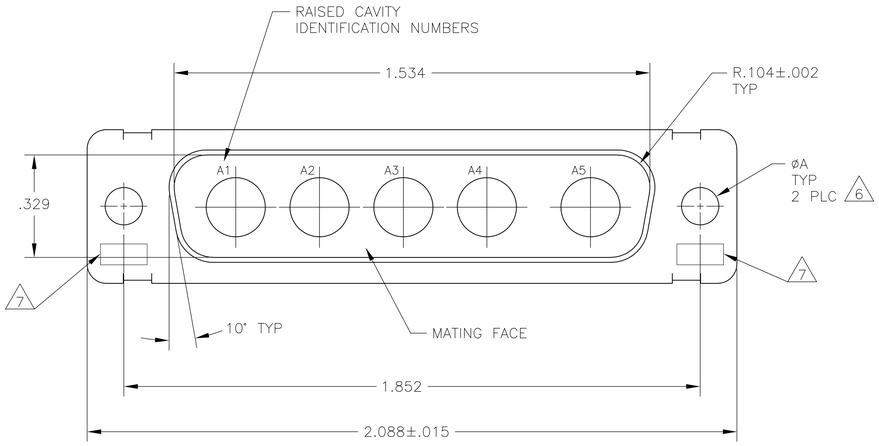

1. THIS PLUG WILL MATE WITH ANY 5C5, SIZE 3 RECEPTACLE IN AMPLIMITE SERIES.
2. USE (5) SIZE 8 POWER, OR COAX PIN CONTACTS. CONSULT PRODUCT ENGINEERING FOR MORE DETAILS.

3. CADMIUM PLATED PER QQ-P-416, TYPE II, CLASS 2.

4. FINISH: TIN PER ASTM-B-545 .000200 MIN THK OVER COPPER PER AMS2418 .000100-.000200 THK.

5. GROUNDING INDENTS FOR 212491-3, 212491-5, 212491-9, 5-212491-3, & 5-212491-5 (NOT SHOWN ON DWG).

6. 212491-5 & 5-212491-5 SUPPLIED WITH 4-40UNC-2B CLINCH NUTS IN THE MOUNTING HOLE LOCATIONS.

7. UL/CSA DESIGNATION STAMPED IN THIS AREA, OPTIONAL.

8. STEEL PER ASTM-A-109.

9. BRASS PER ASTM-B-36 AND MIL-C-50.

10. FINISH: PLATED GOLD PER MIL-G-45204, TYPE II, GRADE C OVER COPPER PLATE PER MIL-C-14550, CLASS IV.

11. FINISH: TIN PER ASTM-B-545 .000400 MIN THK OVER COPPER PER AMS2418 .000050 MIN THK.

12. FINISH: ZINC PLATE PER ASTM-B-633 .000200-.000400 THK WITH SUPPLEMENTARY CHROMATE (Cr3+).

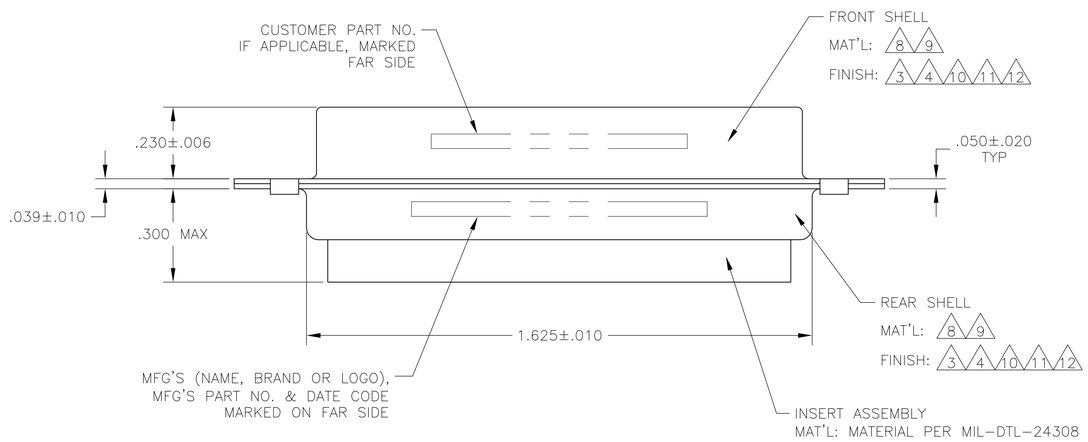

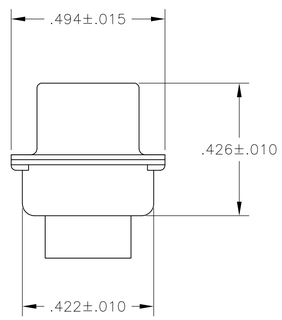

	CUSTOMER PART NO.	ØA	REMARKS	PART NO.
	NOT APPLICABLE	6	5 8 11	5-212491-5
	NOT APPLICABLE	.120	5 8 11	5-212491-3
	NOT APPLICABLE	.120	8 12	5-212491-1
	NOT APPLICABLE	.120	8 11	1-212491-0
	NOT APPLICABLE	.120	5 8 11	212491-9
	B010942-0015	.120	9 10	212491-8
	311P405-10P-B-15	.154	9 10	212491-7
	311P405-10P-B-12	.120	9 10	212491-6
	NOT APPLICABLE	6	4 5 8	212491-5
	97942-645A935H02	.120	3 8	212491-4
	NOT APPLICABLE	.120	4 5 8	212491-3
NOT RELEASED FOR PRODUCTION	NOT APPLICABLE	.120	3 8	212491-2
	NOT APPLICABLE	.120	3 8	212491-1

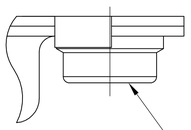

CLINCH NUT #4-40UNC
2 REQ'D
MATERIAL: CARBON STEEL
FINISH: PLATED ZINC
YELLOW CHROMATE
212491-5 ONLY

THIS DRAWING IS A CONTROLLED DOCUMENT.

DIMENSIONS: INCHES

TOLERANCES UNLESS OTHERWISE SPECIFIED:
0 PLC ± –
1 PLC ± –
2 PLC ± –
3 PLC ± .005[0.13]
4 PLC ± –
ANGLES ± 0°,30'

MATERIAL –
FINISH –

DWN 27-May-15 MANJUNATH G M
CHK 27-May-15 CHARLES THOMAS
APVD 27-May-15 CHARLES THOMAS
PRODUCT SPEC —
APPLICATION SPEC —
WEIGHT —

TE Connectivity

NAME
PLUG ASSEMBLY
AMPLIMITE 5C5
SIZE 3, SERIES 109, COAX MIX

SIZE	CAGE CODE	DRAWING NO	RESTRICTED TO
A1	00779	C-212491	—

CUSTOMER DRAWING | SCALE 4:1 | SHEET 1 OF 1 | REV V