THIS DRAWING IS UNPUBLISHED. RELEASED FOR PUBLICATION -,- .
© COPYRIGHT - By - ALL RIGHTS RESERVED.

LOC	DIST
AF	50

REVISIONS

P	LTR	DESCRIPTION	DATE	DWN	APVD
	F	REVISED PER ECR-12-013459	29NOV2012	KH	PD

1. CONTINUOUS STRIP ON REELS
2. MATING TAB THK IS .032±.001
3. WIRE SIZE IS #18-#14 AWG
4. INSULATION RANGE IS .060-.110 DIA.
5. PRELIMINARY - NOT FOR PRODUCTION

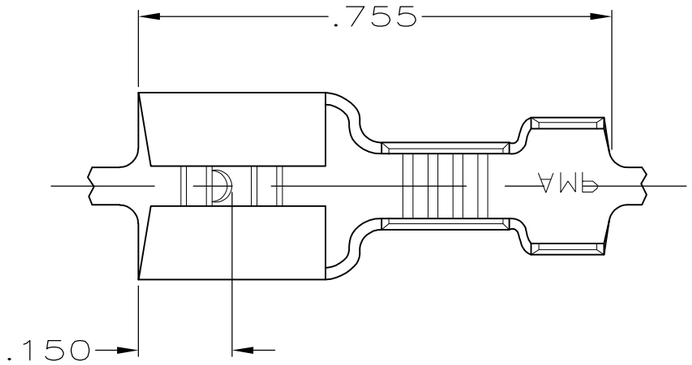

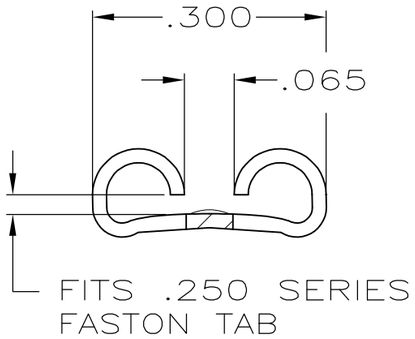

VIEW A-A
SCALE 5:1

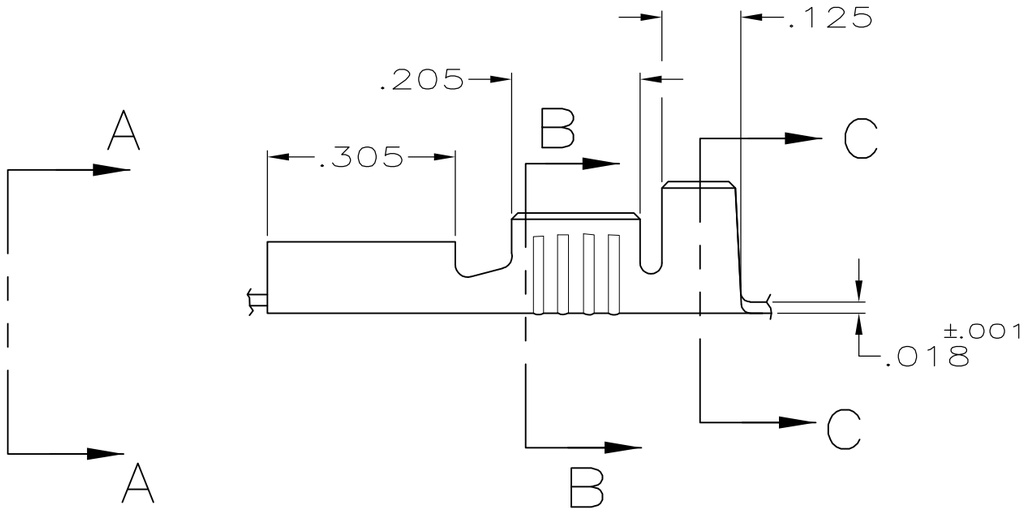

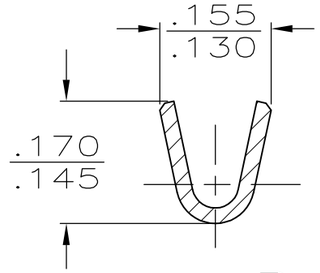

SECTION B-B
SCALE 5:1

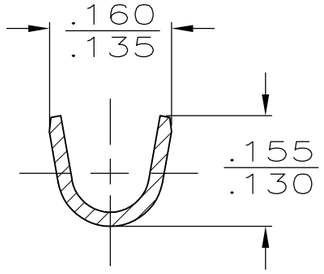

SECTION C-C
SCALE 5:1

	TIN	H03 PHOS BRONZE	5 61375-3
	TIN	BRASS	61375-1
	FINISH	MATERIAL	PART NO

TYPE	WIDTH	STRIP LENGTH ±.015	TYPE	WIDTH	±.002 HEIGHT	WIRE
F	.120	.252	F	.120	.075	14
					.066	16
					.061	18
INSUL BARREL CRIMP		WIRE BARREL CRIMP				

THIS DRAWING IS A CONTROLLED DOCUMENT.

DIMENSIONS: INCHES

TOLERANCES UNLESS OTHERWISE SPECIFIED:
0 PLC ± -
1 PLC ± -
2 PLC ± -
3 PLC ± .015
4 PLC ± -
ANGLES ± -

MATERIAL: SEE TABLE
FINISH: SEE TABLE

DWN	JR RUTH	7/10/89
CHK	MS FEHER	7/10/89
APVD	C MEYERS	7/10/89
PRODUCT SPEC	—	
APPLICATION SPEC	—	
WEIGHT	—	

CUSTOMER DRAWING

TE Connectivity

NAME: RECEPTACLE, FASTON,™ .250 SERIES

SIZE	CAGE CODE	DRAWING NO	RESTRICTED TO
A3	00779	C-61375	—

SCALE	SHEET	REV
4:1	1 OF 1	F