REV.	DATE	DESCRIPTION
A	02/02/05	ADD "75ohm" TO PART DESCRIPTION

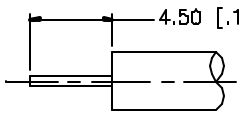

RECOMMENDED CABLE STRIPPING DIMENSIONS

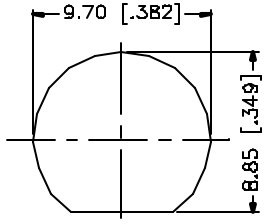

RECOMMENDED MOUNTING HOLE

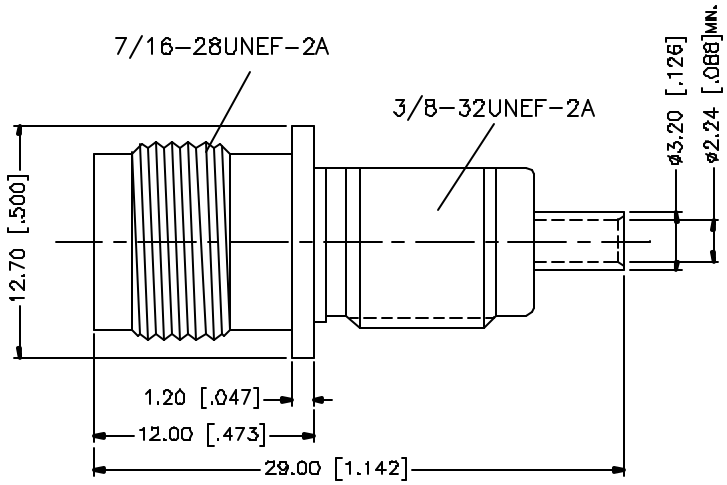

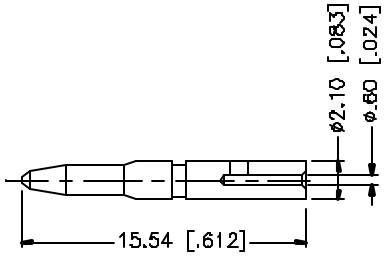

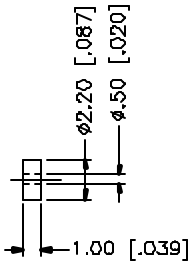

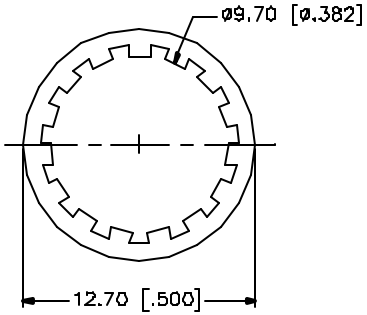

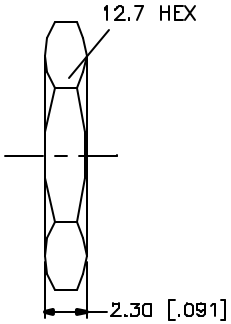

CRIMP NOTES:

1. CRIMPED CONTACT PIN HEX CRIMP SIZE .068"
2. MAX. PANEL THICKNESS = 8mm

8				
7				
6	INSULATOR	TEFLON	NATURAL	1
5	HEX NUT	BRASS	NICKEL	1
4	LOCK WASHER	BRASS	NICKEL	1
3	CONTACT PIN	PHOS. BRONZE	GOLD	1
2	INSULATOR	TEFLON	NATURAL	1
1	BODY	BRASS	NICKEL	1
	DESCRIPTION	MATERIAL	FINISH	QTY

UNLESS OTHERWISE SPECIFIED DIMENSIONS ARE IN MILLIMETERS. DIMENSIONS IN [ ] ARE IN INCHES AND FOR CUSTOMER REFERENCE ONLY.

UNLESS OTHERWISE SPECIFIED TOLERANCES FOR MILLIMETERS ARE:
0.5 – 8mm ± 0.20mm
8 – 30mm ± 0.40mm
30 – 120mm ± 0.50mm

UNLESS OTHERWISE SPECIFIED TOLERANCES FOR INCHES ARE:
.020 – .315 = ± 0.007"
.315 – 1.180 = ± 0.015"
1.180 – 4.724 = ± 0.020"

DO NOT SCALE DRAWING

APPROVALS		DATE
DRAWN	G.R.S.	02/02/05
CHECKED		
ISSUED		
SHEET	1 OF 1	
CAD FILE	C:/122/122463RP.DWG	

Amphenol Connex

PART DESCRIPTION
TNC REVERSE POLARIZED BULKHEAD DIRECT SOLDER JACK (.085", .086" CABLE 75ohm)

PART NO. 122463RP

DWG. NO.	REV.	SIZE	SCALE
122463RP.DWG	A	A	NA