LOOSE PIECE		TAPE MOUNTED		CONTINUOUS STRIP		SPECIFICATIONS											
MATERIAL NUMBER	ENGINEERING NUMBER	MATERIAL NUMBER	ENGINEERING NUMBER	MATERIAL NUMBER	ENGINEERING NUMBER	INS. COLOR	WIRE RANGE AWG	WIRE RANGE MM^2	FITS MALE TAB SIZE	STOCK THICKNESS	"L" MAX.	"I" MAX.	"W" MAX.	"D" ±.01	"G" NOM.	MWID
190170014	AA-2140	190170017	AA-2140T	190170022	AAZ-2140	RED	22-18	0.25-1.5	.250x.032/6.35x0.81	.016/0.41	.865/21.97	.42/10.7	.31/7.9	.156/3.96	.31/7.9	.13/3.3
190170037	BB-2141	190170041	BB-2141T	190170074	BBZ-2141	BLUE	16-14	1.0-2.5	.250x.032/6.35x0.81	.016/0.41	.865/21.97	.42/10.7	.31/7.9	.156/3.96	.31/7.9	.14/3.6
190170047	C-2143	190170050	C-2143T	-	-	YELLOW	12-10	4.0-6.0	.250x.032/6.35x0.81	.018/0.46	1.011/25.68	.56/14.2	.31/7.9	.156/3.96	.31/7.9	.24/6.1
190170007	AA-2137	190170012	AA-2137T	190170068	AAZ-2137	RED	22-18	0.25-1.5	.187x.020/4.75x0.51	.016/0.41	.789/20.04	.42/10.7	.25/6.4	.125/3.18	.25/6.4	.13/3.3
190170031	BB-2138	190170035	BB-2138T	190170072	BBZ-2138	BLUE	16-14	1.0-2.5	.187x.020/4.75x0.51	.016/0.41	.789/20.04	.42/10.7	.25/6.4	.125/3.18	.25/6.4	.14/3.6
190170008	AA-2137-032	190170009	AA-2137-032T	190170069	AAZ-2137-032	BRIGHT RED (A)	22-18	0.25-1.5	.187x.032/4.75x0.81	.016/0.41	.789/20.04	.42/10.7	.25/6.4	.125/3.18	.25/6.4	.13/3.3
190170032	BB-2138-032	-	-	190170073	BBZ-2138-032	BRIGHT BLUE (A)	16-14	1.0-2.5	.187x.032/4.75x0.81	.016/0.41	.789/20.04	.42/10.7	.25/6.4	.125/3.18	.25/6.4	.14/3.6
190170001	AA-2131	190170004	AA-2131T	190170066	AAZ-2131	RED	22-18	0.25-1.5	.110x.020/2.80x0.51	.012/0.30	.789/20.04	.42/10.7	.17/4.3	.210/5.33	.25/6.4	.13/3.3
190170023	BB-2132	190170026	BB-2132T	190170070	BBZ-2132	BLUE	16-14	1.0-2.5	.110x.020/2.80x0.51	.012/0.30	.789/20.04	.42/10.7	.17/4.3	.210/5.33	.25/6.4	.14/3.6
190170005	AA-2134	190170006	AA-2134T	190170067	AAZ-2134	BRIGHT RED (A)	22-18	0.25-1.5	.110x.032/2.80x0.81	.012/0.30	.789/20.04	.42/10.7	.17/4.3	.210/5.33	.25/6.4	.13/3.3
190170028	BB-2135	190170029	BB-2135T	190170071	BBZ-2135	BRIGHT BLUE (A)	16-14	1.0-2.5	.110x.032/2.80x0.81	.012/0.30	.789/20.04	.42/10.7	.17/4.3	.210/5.33	.25/6.4	.14/3.6
190170018	AA-2190	190170003	AA-2190T	-	-	RED	22-18	0.25-1.5	.205x.020/5.21x0.51	.016/0.41	.789/20.04	.42/10.7	.26/6.6	.125/3.18	.25/6.4	.13/3.3
190170043	BB-2191	190170046	BB-2191T	-	-	BLUE	16-14	1.0-2.5	.205x.020/5.21x0.51	.016/0.41	.789/20.04	.42/10.7	.26/6.6	.125/3.18	.25/6.4	.14/3.6
190170019	AA-2190-032	-	-	-	-	BRIGHT RED (A)	22-18	0.25-1.5	.205x.032/5.21x0.81	.016/0.41	.789/20.04	.42/10.7	.26/6.6	.125/3.18	.25/6.4	.13/3.3
190170044	BB-2191-032	190170016	BB-2191-032T	-	-	BRIGHT BLUE (A)	16-14	1.0-2.5	.205x.032/5.21x0.81	.016/0.41	.789/20.04	.42/10.7	.26/6.6	.125/3.18	.25/6.4	.14/3.6

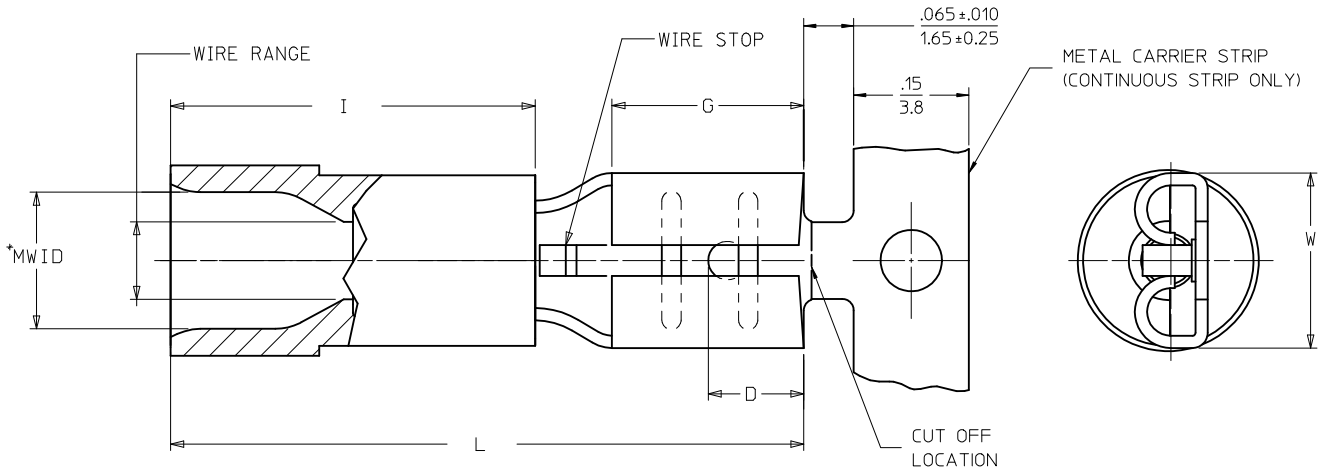

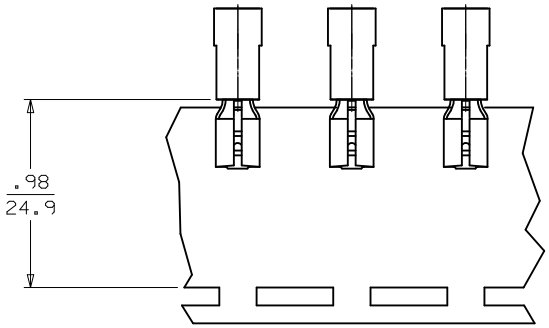

PARTS ON TAPE

NOTES:
1. MATERIAL: BRASS TERMINAL
2. FINISH: ELECTRO-TIN PLATING
3. INSULATION: MOLDED PVC
4. *MWID=MAXIMUM WIRE INSULATION DIAMETER
5. PARTS ARE ROHS COMPLIANT.

FERRULE DESCR. CONT P/N
EC NO: WNA2011-0346 2011/04/20
DRWN:ETHRODAHL 2011/04/26
CHKD:JMACNEIL 2011/07/13
APPR: JMACNEIL
DESCRIPTION
A
REV

QUALITY SYMBOLS
▼=0
▽(C)=0

GENERAL TOLERANCES (UNLESS SPECIFIED)

	mm	INCH
4 PLACES	± ---	± ---
3 PLACES	± ---	± .005
2 PLACES	± 0.13	± .010
1 PLACE	± 0.25	± .020
ANGULAR ±---°		

DRAFT WHERE APPLICABLE MUST REMAIN WITHIN DIMENSIONS

DIMENSION STYLE: IN/MM
SCALE: ---
DESIGN UNITS: INCH
THIRD ANGLE PROJECTION

DRAWN BY: ETHRODAHL DATE: 2011/04/20
CHECKED BY: JMACNEIL DATE: 2011/04/26
APPROVED BY: JMACNEIL DATE: 2011/07/13

TITLE: QUICK DISCONNECT PARTIALLY INSULATED INSULKRIMP

molex MOLEX INCORPORATED

MATERIAL NO.: SEE CHART
DOCUMENT NO.: SD-19017-003
SHEET NO.: 1 OF 1
SIZE: C

THIS DRAWING CONTAINS INFORMATION THAT IS PROPRIETARY TO MOLEX INCORPORATED AND SHOULD NOT BE USED WITHOUT WRITTEN PERMISSION