CATALOG LISTING	TYPE	OPERATING PRESSURE RANGE
141PC15D /1\	D	0 TO -14.7 PSID
141PC15G /1\	G	0 TO -14.7 PSIG
142PC15A /1\	A	0 TO 15 PSIA
O /1\	D	0 TO 15 PSID
142PC15G /1\	G	0 TO 15 PSIG
142PC15A104 /6\	A	0 TO 15 PSIA

NOTES
1 - INPUT MEDIA:
P1 - DRY GASES ONLY: CONNECTION SIDE OF SENSOR
P2 - LIMITED ONLY TO THOSE MEDIA THAT WILL NOT ATTACK POLYESTER, SILICON OR SILICONE BASED ADHESIVE
2 - TERMINALS ARE PLATED FOR SOLDERING
3 - LIMIT SOLDERING TO 315°C MAX FOR 10 SECONDS MAX
4 - UNITS ARE OF PLASTIC CONSTRUCTION
5 - P2 - MATERIAL SELECTED FOR RESISTANCE TO GASOLINE AND GASOLINE VAPORS
/6\ - SPECIAL OP-AMP LEADED

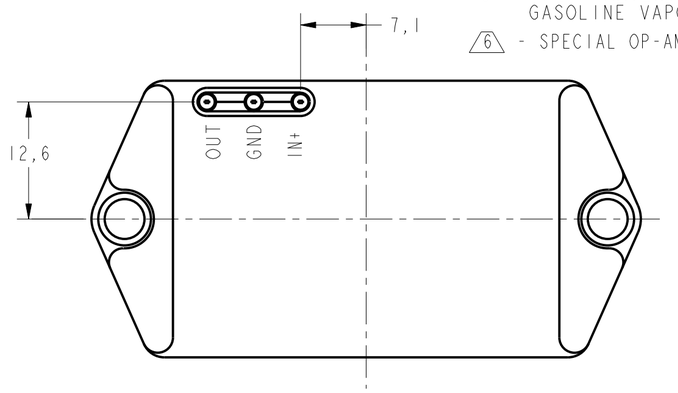

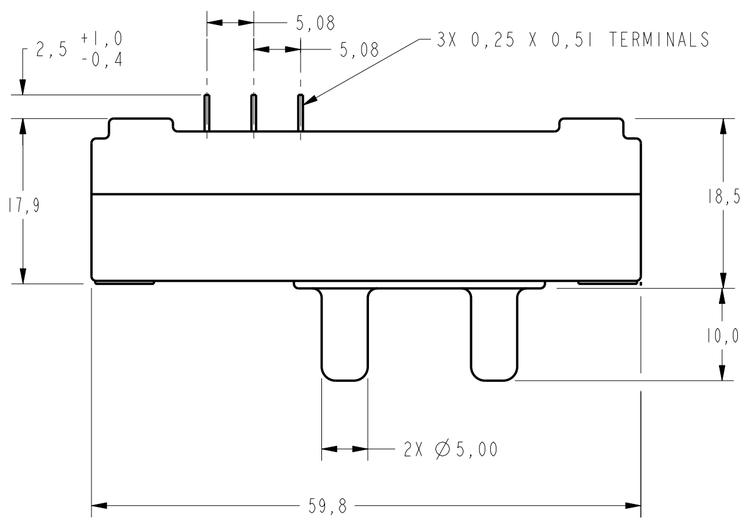

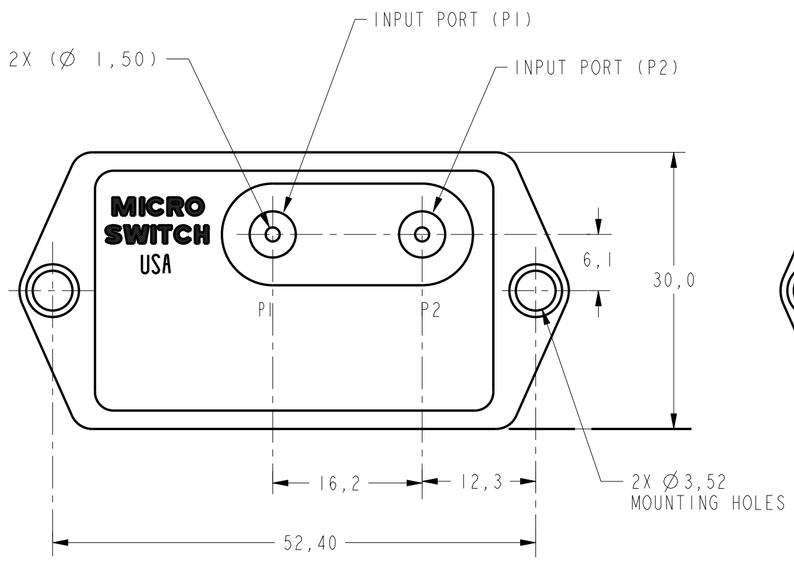

TYPE "D" (DIFFERENTIAL)

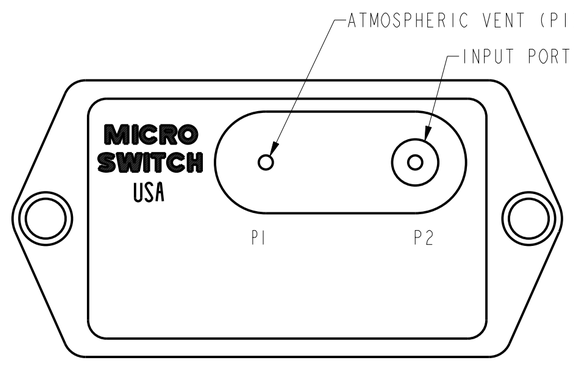

TYPE "G" (GAGE)

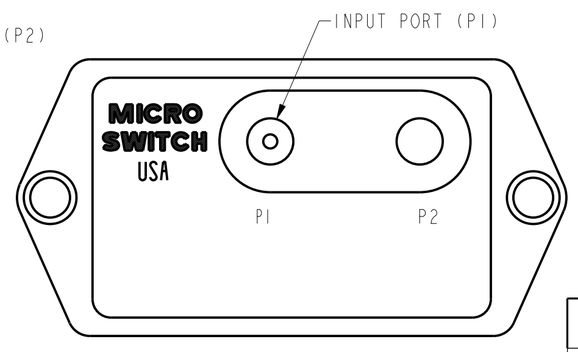

TYPE "A" (ABSOLUTE)

GENERAL OPERATING CHARACTERISTICS

PRESSURE RANGE	0 TO 775 mmHg (0 TO 15 PSI)
OVERPRESSURE	45 PSIG
TEMPERATURE RANGES	
STORAGE	-55 TO +125° C
OPERATING	-40 TO +85° C
COMPENSATED	-18 TO 63° C
SUPPLY VOLTAGE	7 TO 16 VDC
SUPPLY CURRENT	20mA MAX WITH 10K LOAD
OUTPUT VOLTAGE	PROPORTIONAL TO SUPPLY VOLTAGE OVER ABOVE RECOMMENDED RANGE
SHORT CIRCUIT LIMIT	MAY BE SHORTED INDEFINITELY
OUTPUT RIPPLE	NONE
GROUND REFERENCE	SUPPLY AND OUTPUT ARE COMMON

ELECTRICAL PERFORMANCE AT 25°C AND 8.00±.01 VDC SUPPLY

OUTPUT VOLTAGE	
141PC15D	
NULL (0 PSIG)	1.000±.050 VDC
FULL SCALE (-15 PSIG)	6.000 VDC TYP P1 > P2
SPAN	5.000±.050 VDC
141PC15G	
NULL (0 PSIG)	1.000±.050 VDC
FULL SCALE (-12.5 PSIG)	5.167 VDC TYP P1 > P2
SPAN	4.167±.050 VDC
142PC15D OR G	
NULL (0 PSIG)	1.000±.050 VDC
FULL SCALE (15 PSIG)	6.000VDC TYP P2 > P1
SPAN	5.000± 0.05 VDC
SENSITIVITY	333.3 mV/PSI TYP
LINEARITY (B.F.S.L.)	.75% SPAN MAX P1 > P2 1.50% SPAN MAX P2 > P1
HYSTERESIS & REPEATABILITY	.15% SPAN TYP
TEMPERATURE ERROR	
-18°C TO +63°C	1.00% SPAN MAX
-40°C TO +85°C	1.50% SPAN TYP
142PC15A / 142PC15A104	
NULL (0 PSIA)	1.000 VDC TYP
REFERENCE (2 PSIA)	1.667±.050 VDC
FULL SCALE (15 PSIA)	6.000 VDC TYP P1 > P2
SPAN (2 TO 15 PSIA)	4.333±.050 VDC
SENSITIVITY	333.3 mV/PSI TYP
LINEARITY (B.F.S.L.)	.87% SPAN MAX
HYSTERESIS & REPEATABILITY	.17% SPAN TYP
TEMPERATURE ERROR	
-18°C TO +63°C	1.15% SPAN MAX
-40°C TO +85°C	1.73% SPAN TYP

METRIC	INCHES
0,25	.010
0,4	.016
0,51	.020
1,0	.039
1,50	.059
2,5	.10
3,52	.139
5,00	.197
5,08	.200
6,1	.24
7,1	.28
10,0	.39
12,3	.48
12,6	.50
16,2	.64
17,9	.70
18,5	.73
30,0	1.18
52,40	2.063
59,8	2.35

THIRD ANGLE PROJECTION

SCALE 2 : 1

DO NOT SCALE PRINT

TOLERANCES
APPLY TO DESIGN UNITS. CONVERSIONS ARE ONLY FOR REFERENCE. UNLESS NOTED, TOLERANCES ARE :

	DIM. mm	TOL mm/in	DIM. in	TOL mm/in
NO PLACES	X	1/.04	X.X	0.8/.03
ONE PLACE	X.X	0.4/.016	X.XX	0.38/.015
TWO PLACES	X.XX	0.15/.006	X.XXX	0.13/.005
THREE PLACES				
ANGLES				

DESIGN UNITS SI METRIC [X] US CUSTOMARY [ ]

WEIGHT 31 G

THIS DRAWING COVERS A PROPRIETARY ITEM AND IS THE PROPERTY OF MICRO SWITCH. A DIVISION OF HONEYWELL. THIS DRAWING IS NOT TO BE COPIED OR USED WITHOUT THE APPROVAL OF MICRO SWITCH.

MICRO SWITCH a Honeywell Division
FED. MFG. CODE 91929

PRESSURE TRANSDUCER

CATALOG LISTING
140PC15 SERIES CHART 1

ANSI Y14.5M-1982 APPLIES

M 140PC15 SERIES CHART 1

140PC15 SERIES CHART 1 — PAGE 1 OF 1 — REPLACES - — RELEASE NO. - — DRAWING NUMBER M — ISSUE 21 — 05SEP06

REVISIONS			
A	205031	GJW 13MAR02	
B	0004623	DVM 15APR04	
C	0024484	CMH 05SEP06	

	DRAWN	CHECK	CHECK	CHECK	CHECK	CHECK
	GJW 13 MAR 02	AK 15 APR 04	AK 13 MAR 02	SAV 13 MAR 02		

PTC/CAD 2D