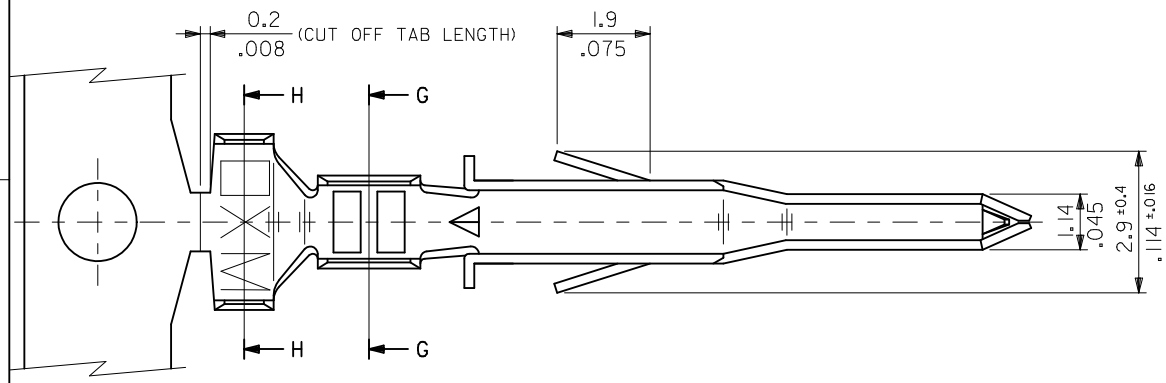

NOTES

1. MATERIAL: SEE CHART
2. FINISH: SEE CHART
3. PRODUCT SPECIFICATION: PS-5556-001, PS-5556-002, PS-5556-003.
4. PACKAGING SPECIFICATION: PK-5558-001 FOR CHAIN
   PK-5556-003 FOR LOOSE
5. MATES WITH TERMINAL: 5556 SERIES.
6. APPLICABLE HOUSING: 5559, 30068, 42475 SERIES.
7. THE NUMBER OF SERRATIONS TO BE ONE FOR WIRE RANGE #22-28.
8. WHEN TERMINALS ARE INSTALLED IN THE HOUSING THE WIRES ARE TO BE DRESSED IN SUCH A MANNER TO ALLOW THE TERMINALS TO FLOAT FREELY IN THE POCKET.
9. THIS TERMINAL IS DESIGNED FOR SINGLE WIRE CRIMPING.
10. PART CONFORMS TO CLASS "B" REQUIREMENTS OF COSMETIC SPECIFICATION PS-45499-002.

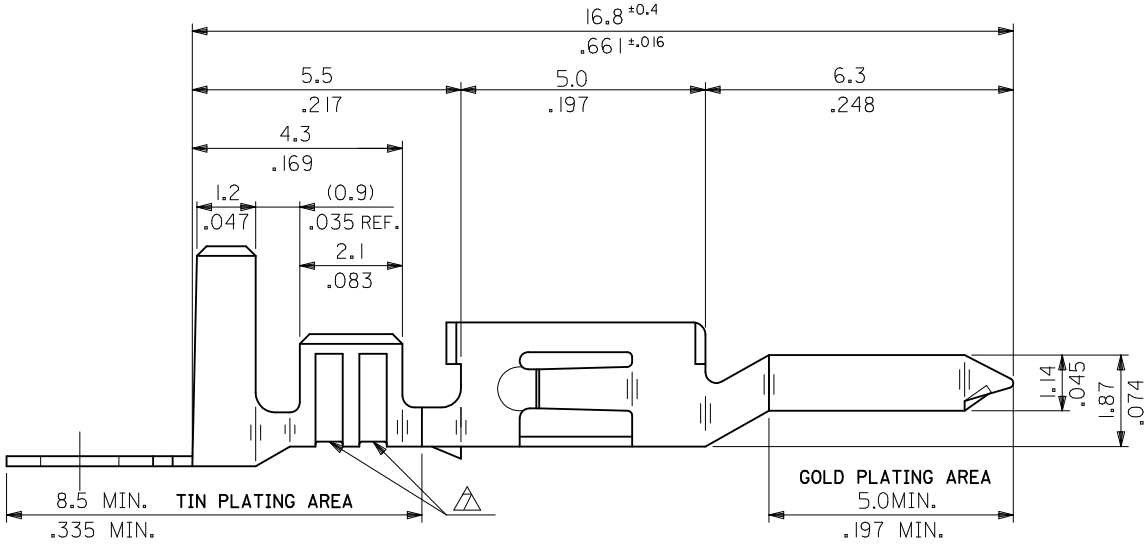

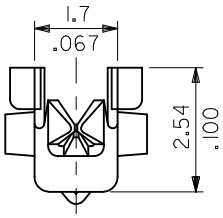

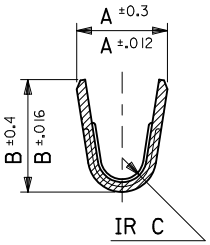

SECT. G-G

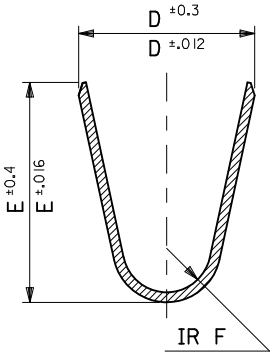

SECT. H-H

UPDATE NOTES EC NO: UCP2010-2478 DRWN: JAGUILAR 2010/04/06 CHKD: JBELL '92/05/21 APPR: FSMITH 2010/04/09 E1	DESCRIPTION REV	QUALITY SYMBOLS =0 =0 =0	GENERAL TOLERANCES (UNLESS SPECIFIED) mm / INCH 4 PLACES ± -- / ± -- 3 PLACES ± -- / ± .008 2 PLACES ± 0.20 / ± .008 1 PLACE ± 0.2 / ± --- ANGULAR ± 3 ° DRAFT WHERE APPLICABLE MUST REMAIN WITHIN DIMENSIONS	DIMENSION STYLE MM/IN DRAWN BY H.HIRAMOTO DATE '91/03/13 CHECKED BY M.FUKUSHIMA DATE '92/05/21 APPROVED BY FSMITH DATE 2010/04/09 MATERIAL NO. SEE CHART	SCALE 10:1 DESIGN UNITS METRIC THIRD ANGLE PROJECTION TITLE MINI-FIT JR SELECT GOLD MALE CRIMP TERMINAL -LEAD FREE- molex MOLEX INCORPORATED DOCUMENT NO. SD-5558-002 SHEET NO. 1 OF 2	SIZE B THIS DRAWING CONTAINS INFORMATION THAT IS PROPRIETARY TO MOLEX INCORPORATED AND SHOULD NOT BE USED WITHOUT WRITTEN PERMISSION

tb_frame_B_P_ME_T
Rev. F 2009/06/18

MATERIAL	FINISH	F	E	D	C	B	A	INS. RANGE	WIRE RANGE	EDP NO.	ENG NO.	FORM
PHOSPHOR BRONZE	SELECTIVE GOLD 0.76µm /30m.i. MIN. AND SELECTIVE TIN 2.03µm /80m.i. MIN. OVER NICKEL 1.27µm /50m.i. MIN.	0.9 / .035	4.5 / .177	3.6 / .142	0.6 / .024	2.7 / .106	2.3 / .091	Ø 3.1 / .122 MAX.	#16	39-00-0224	5558 PBGS3L	LOOSE
										-0223	PBGS3	CHAIN
		0.6 / .024	2.3 / .091	2.3 / .091	0.4 / .016	1.65 / .065	1.8 / .071	Ø 0.9-1.8 / .035-.071	#22-28	-0222	PBGS2L	LOOSE
										-0221	PBGS2	CHAIN
		0.9 / .035	4.5 / .177	3.6 / .142	0.5 / .020	2.3 / .091	1.9 / .075	Ø 1.3-3.1 / .051-.122	#18-24	-0220	PBGSL	LOOSE
										-0219	PBGS	CHAIN
BRASS	SELECTIVE GOLD 1.27µm /50m.i. MIN. AND SELECTIVE TIN 2.54µm / 100m.i. MIN. OVER NICKEL 1.27µm /50m.i. MIN.	0.9 / .035	4.5 / .177	3.6 / .142	0.6 / .024	2.7 / .106	2.3 / .091	Ø 3.1 / .122 MAX.	#16	-0148	GS9L	LOOSE
										-0147	GS9	CHAIN
		0.6 / .024	2.3 / .091	2.3 / .091	0.4 / .016	1.65 / .065	1.8 / .071	Ø 0.9-1.8 / .035-.071	#22-28	-0146	GS8L	LOOSE
										39-00-0145	GS8	CHAIN
		0.9 / .035	4.5 / .177	3.6 / .142	0.5 / .020	2.3 / .091	1.9 / .075	Ø 1.3-3.1 / .051-.122	#18-24	40-13-0854	GS7L	LOOSE
										40-13-0853	GS7	CHAIN
	SELECTIVE GOLD 0.38µm / 15m.i. MIN. AND SELECTIVE TIN 2.03µm /80m.i. MIN. OVER NICKEL 1.27µm /50m.i. MIN.	0.9 / .035	4.5 / .177	3.6 / .142	0.6 / .024	2.7 / .106	2.3 / .091	Ø 3.1 / .122 MAX.	#16	39-00-0100	GS6L	LOOSE
										-0099	GS6	CHAIN
		0.6 / .024	2.3 / .091	2.3 / .091	0.4 / .016	1.65 / .065	1.8 / .071	Ø 0.9-1.8 / .035-.071	#22-28	-0098	GS5L	LOOSE
										-0097	GS5	CHAIN
		0.9 / .035	4.5 / .177	3.6 / .142	0.5 / .020	2.3 / .091	1.9 / .075	Ø 1.3-3.1 / .051-.122	#18-24	-0076	GS4L	LOOSE
										-0075	GS4	CHAIN
	SELECTIVE GOLD 0.76µm /30m.i. MIN. AND SELECTIVE TIN 2.03µm /80m.i. MIN. OVER NICKEL 1.27µm /50m.i. MIN.	0.9 / .035	4.5 / .177	3.6 / .142	0.6 / .024	2.7 / .106	2.3 / .091	Ø 3.1 / .122 MAX.	#16	-0096	GS3L	LOOSE
										-0095	GS3	CHAIN
		0.6 / .024	2.3 / .091	2.3 / .091	0.4 / .016	1.65 / .065	1.8 / .071	Ø 0.9-1.8 / .035-.071	#22-28	-0433	GS2L7F	LOOSE
										-0432	GS27F	CHAIN
		0.9 / .035	4.5 / .177	3.6 / .142	0.5 / .020	2.3 / .091	1.9 / .075	Ø 1.3-3.1 / .051-.122	#18-24	-0431	GSL7F	LOOSE
										39-00-0430	5558 GS7F	CHAIN

UPDATE TITLE BLOCK
EC NO: UCP2010-2478
DRWN: J.AGUILAR 2010/04/06
CHKD: J.BELL '92/05/21
APPR: F.SMITH 2010/04/09
DESCRIPTION
E1
REV

QUALITY SYMBOLS
F_A=0
F_C=0
F_P=0

GENERAL TOLERANCES (UNLESS SPECIFIED)

	mm	INCH
4 PLACES	± --	± ---
3 PLACES	± --	± .008
2 PLACES	± 0.20	± .008
1 PLACE	± 0.2	± ---
ANGULAR ± 3 °		

DRAFT WHERE APPLICABLE MUST REMAIN WITHIN DIMENSIONS

DIMENSION STYLE: MM/IN
SCALE: 10:1
DESIGN UNITS: METRIC
THIRD ANGLE PROJECTION

DRAWN BY: H.HIRAMOTO DATE: '91/03/13
CHECKED BY: M.FUKUSHIMA DATE: '92/05/21
APPROVED BY: F.SMITH DATE: 2010/04/09

TITLE: MINI-FIT JR SELECT GOLD MALE CRIMP TERMINAL -LEAD FREE-

MOLEX INCORPORATED

MATERIAL NO.: SEE CHART
DOCUMENT NO.: SD-5558-002
SHEET NO.: 2 OF 2
SIZE: B

THIS DRAWING CONTAINS INFORMATION THAT IS PROPRIETARY TO MOLEX INCORPORATED AND SHOULD NOT BE USED WITHOUT WRITTEN PERMISSION