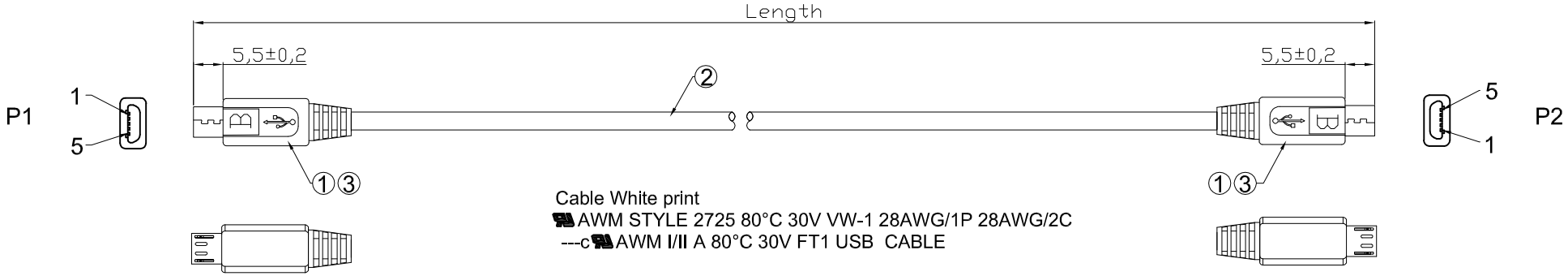

Cable White print
AWM STYLE 2725 80°C 30V VW-1 28AWG/1P 28AWG/2C
---c AWM I/II A 80°C 30V FT1 USB CABLE

PE Bag Packing

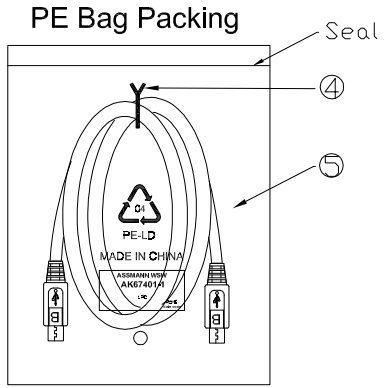

1PC/PE Bag

PIN ASSIGNMENT

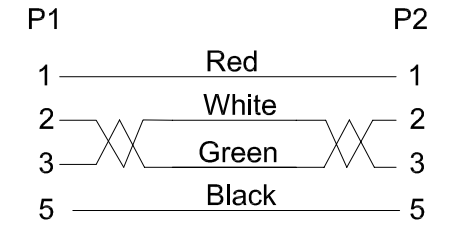

WSW P/N	Jacket color	Length(mm)
AK67401-0.5	Black	500±15
AK67401-1	Black	1000±20
AK67401-2	Black	2000±20
AK67401-3	Black	3000±30
AK67401-5	Black	5000±50

Electrical test:
1. 100% short, open, miss wire test
2. Conduct resistance: 2 Ohm max.
3. Insulator resistance: 5Mohm min.
4. Dielectric test: DC 300V

NO.	NAME.	SPECIFICATION	Q'TY	Unit
⑤	PE Bag	Clear Print black "MADE IN CHINA"+ "1PC"	1	PCS
④	TIE	Black	1	PCS
③	Out Jacket	Black PVC-45P	NA	G
②	Cable	USB2.0 UL2725 (28#*1P+AL)+28#/2C+AEB Black OD:3.5mm	1	PCS
①	CONN	USB 2.0 Micro 5P B Male Shell:Nickel Pin:G/F Insulator color: black	2	PCS

RoHS compliant
Unit: mm

Scale	Free					Date	Name	Customer-No.
TOLERANCE					Drawn	26.07.2016	Amy	
					Approved	26.07.2016	Amy	ASSMANN WSW-No. AK67401-x
DIM	TOL							Drawing-No. ASS 7722 CA rev00
		⓪	Drawn	26.07.2016	Amy			
Angle	TOL	Id.	Modification	Date	Name			Replace / Sheet

ASSMANN wsw components