THIS DRAWING IS UNPUBLISHED. RELEASED FOR PUBLICATION -,- .
© COPYRIGHT - BY TYCO ELECTRONICS CORPORATION. ALL RIGHTS RESERVED.

LOC	DIST
CM	00

REVISIONS

P	LTR	DESCRIPTION	DATE	DWN	APVD
	J2	REV PER ECR 10-010357	13MAY10	JR	TM

1 PACKAGED IN HEAT SEALED 3 MIL PLOYBAG

2 MIL NO. MS3367-5

3 OBSOLETE PARTS, OBSOLETE CIS STREAMLINING PER D.RENAUD / D.SINISI

UNIT OF MEASURE	A	B	C	D	E	L	MAX BUNDLE DIAMETER	MIN TENSILE STRENGTH
INCHES	.232	.236	.142	.169	.043	5.83	1.25	30 LBS
MM	5.9	6.0	3.6	4.28	1.1	148	31.75	13.608 KG

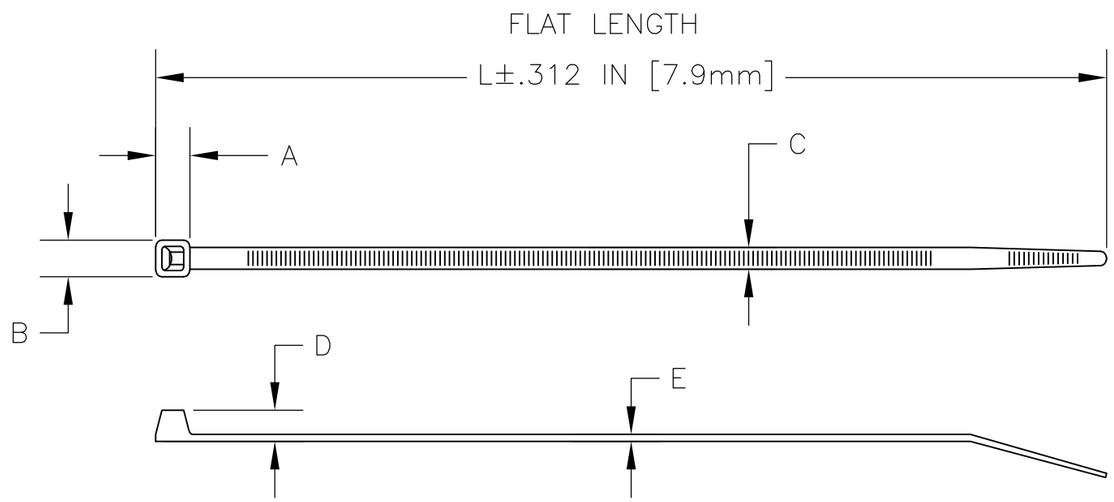

	QTY/BAG	COLOR	PART NO
	1000	NATURAL	2-603227-9
	1000	BLACK	2-603227-0
	100	NATURAL	1-603227-9
	100	BLACK	1-603227-0
3 OBSOLETE	1	NATURAL	603227-2
3 OBSOLETE	1	BLACK	603227-1

THIS DRAWING IS A CONTROLLED DOCUMENT.

DIMENSIONS: MM [INCHES]

TOLERANCES UNLESS OTHERWISE SPECIFIED:
0 PLC ± -
1 PLC ± -
2 PLC ± .03 [0.8]
3 PLC ± -
4 PLC ± -
ANGLES ± -

MATERIAL: NYLON 6/6

FINISH: -

DWN jr ruth 13MAY10
CHK T MICHIELUTTI 13MAY10
APVD T MICHIELUTTI 13MAY10
PRODUCT SPEC —
APPLICATION SPEC —
WEIGHT —

Tyco Electronics
Tyco Electronics Corporation
Harrisburg, PA 17105-3608

NAME: CABLE TIE, 6 INCH
—
—

SIZE	CAGE CODE	DRAWING NO	RESTRICTED TO
A3	00779	C-603227	—

CUSTOMER DRAWING

SCALE 1:1 SHEET 1 OF 1 REV J2

AMP 1470-19 REV 31MAR2000