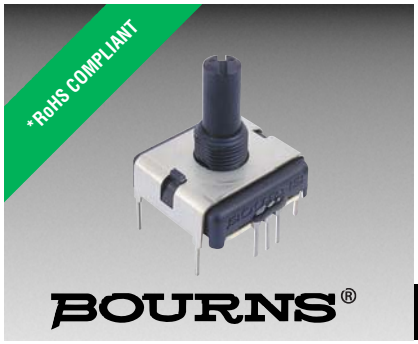

Features

- RoHS compliant*
- Space saving design
- Wide range of resistance values
- PC pin or solder lug terminals
- Metric shaft and bushing option
- Mounting brackets available
- Linear or audio taper versions

PC - "Slimline" 22 mm Square Single Turn Panel Control

Electrical Characteristics

Standard Resistance Range	
Linear Tapers	500 ohms to 1 megohm
Audio Tapers	1 K ohms to 500 K ohms
Total Resistance Tolerance	±20 %
Independent Linearity	±5 %
Absolute Minimum Resistance	5 ohms maximum
Effective Electrical Angle	270 ° ± 5 °
Contact Resistance Variation	7 % of total resistance
Dielectric Withstanding Voltage (MIL-STD-202, Method 301)	
Sea Level	1,000 VAC minimum
70,000 Feet	500 VAC minimum
Insulation Resistance (500 V)	1,000 ohms minimum
Power Rating @ 70 ºC (Voltage Limited by Power Dissipation or 350 VAC, Whichever is Less)	
Linear	.75 watt
Audio	.25 watt
Theoretical Resolution	Essentially infinite

Environmental Characteristics

Operating Temperature Range	+1 °C to +125 °C
Storage Temperature Range	-40 °C to +125 °C
Temperature Coefficient Over Storage Temperature Range	±1000 ppm/°C
Vibration	20 G
Total Resistance Shift	±1 % maximum
Voltage Ratio Shift	±20 % maximum
Shock	50 G
Total Resistance Shift	±1 % maximum
Voltage Ratio Shift	±20 % maximum
Load Life	1,000 Hours @ Rated Power, 20 % RH, 70 ºC
Total Resistance Shift	±10 % maximum
Rotational Life (No Load)	50,000 cycles
Total Resistance Shift (Linear taper)	±10 ohms or 12 %, whichever is greater
Total Resistance Shift (Audio taper)	±20 % maximum
Contact Resistance Variation	±5 % maximum
Moisture Resistance	MIL-STD-202, Method 103, Condition B
Total Resistance Shift	±20 % maximum
IP Rating	IP 40

Mechanical Characteristics

Stop Strength (1/4 " and 6 mm Shaft Diameters)	79.09 N-cm (7 lb.-in.)
Mechanical Angle	300 ° ± 5 °
Torque	
Starting (Detented)	0.5-1.5 N-cm (0.75-2.25 oz.-in.)
Starting (Undetented)	1.5 N-cm (2.25 oz.-in.) maximum
Running (Undetented)	0.18 to 1.06 N-cm (0.25 to 1.5 oz.-in.)
Mounting	79.09 N-cm (7 lb.-in.) maximum
Weight (Single Section)	21 gm (0.75 oz.) maximum
Terminals	PC pin or solder lug
Soldering Condition	
Manual Soldering	96.5Sn/3.0Ag/0.5Cu solid wire or no-clean rosin cored wire 370 °C (700 °F) max. for 3 seconds
Wave Soldering	96.5Sn/3.0Ag/0.5Cu solder with no-clean flux 260 °C (500 °F) max. for 5 seconds
Wash processes	Not recommended
Marking	Manufacturer's trademark, resistance value, part number, and date code
Ganging	1 cup maximum
Hardware	One lockwasher and one mounting nut is shipped with each potentiometer, except where noted in the part number.
Detents	Center, 10, 20, 30, none

For additional features or specifications not shown, consult factory.
FOR ORDERING INFORMATION SEE PAGE 4.

*RoHS Directive 2002/95/EC Jan. 27, 2003 including annex and RoHS Recast 2011/65/EU June 8, 2011.

Specifications are subject to change without notice.
The device characteristics and parameters in this data sheet can and do vary in different applications and actual device performance may vary over time.
Users should verify actual device performance in their specific applications.

Product Dimensions

Axial PC Pins

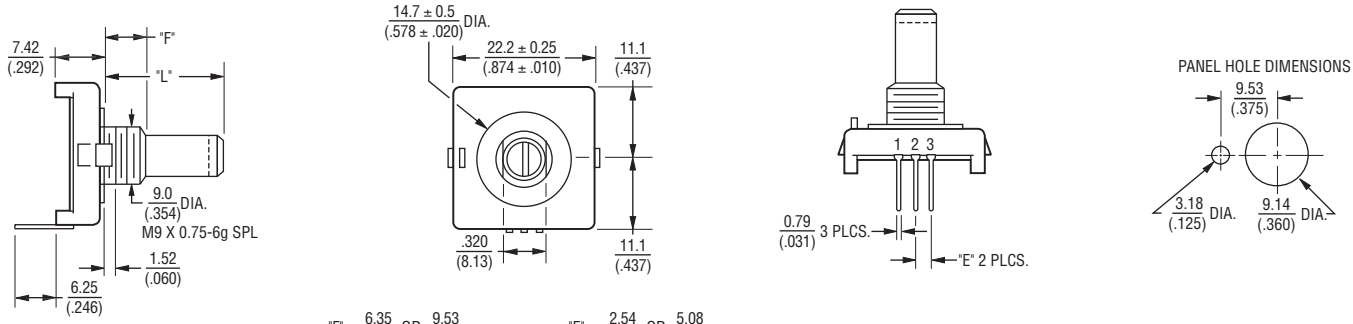

"F" = 6.35 (.250) OR 9.53 (.375) "E" = 2.54 (.100) OR 5.08 (.200)

"L" = SEE SHAFT LENGTH TABLE

Radial PC Pins

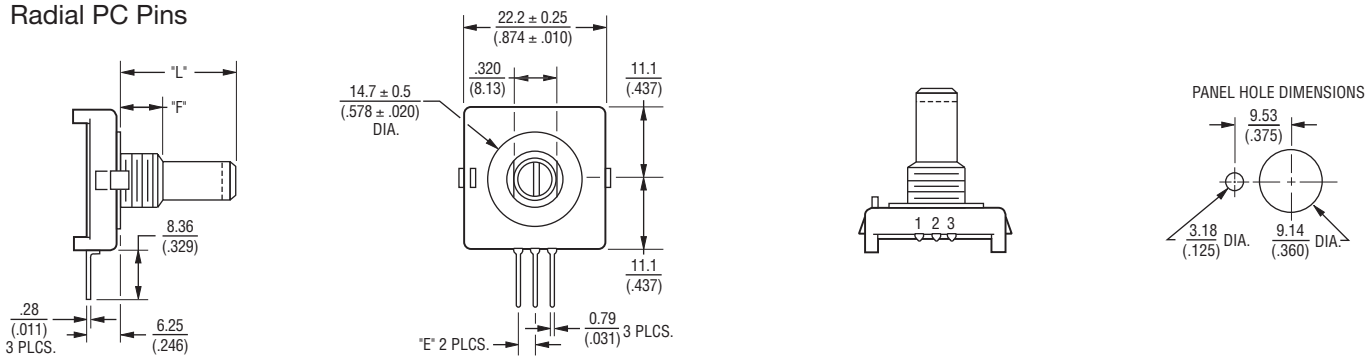

"F" = 6.35 (.250) OR 9.53 (.375) "E" = 2.54 (.100) OR 5.08 (.200)

"L" = SEE SHAFT LENGTH TABLE

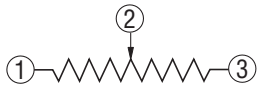

TOLERANCES EXCEPT WHERE NOTED:

.XX = ± .25 (.010)

.XXX = ± .13 (.005)

DIMENSIONS: MM (INCHES)

Specifications are subject to change without notice.
The device characteristics and parameters in this data sheet can and do vary in different applications and actual device performance may vary over time.
Users should verify actual device performance in their specific applications.

Product Dimensions

SOLDER LUGS

(Dimensions not given are the same as Axial PC pins.

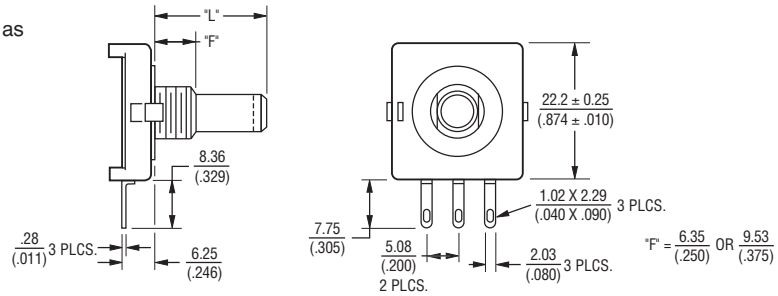

Axial PC PINS With Rear Mounting Bracket

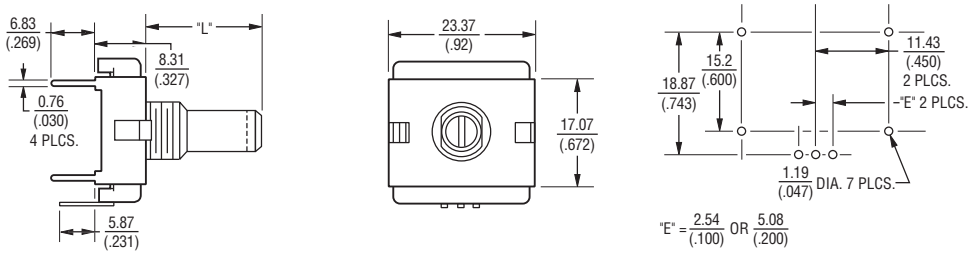

Radial PC PINS With Side Mounting Bracket

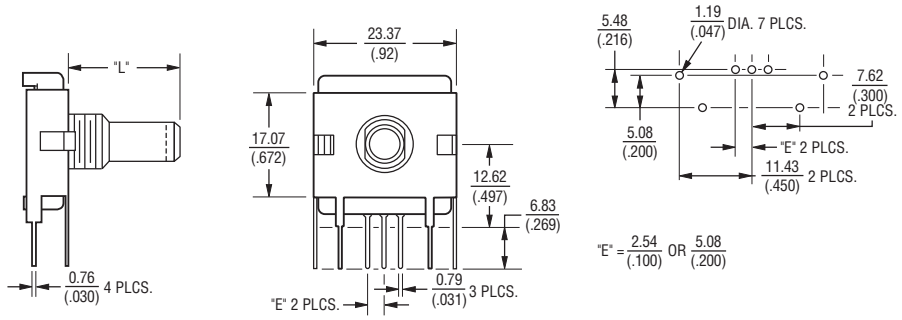

SHAFT STYLES AND ORIENTATION (Full CCW Rotation)

Shaft Style **C** Shaft Style **J** Shaft Style **R** Shaft Style **B** Shaft Style **Y**

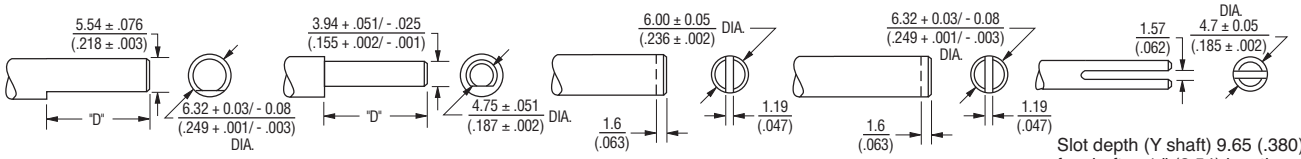

"D" dimensions extend from shaft end to bushing face "D" = (shaft length, FMS) – (bushing length)

Slot depth (Y shaft) 9.65 (.380) for shafts <1 " (2.54) length; 14.7 (.520) for shafts ≥1 " (2.54) length

Shaft Orientations

Shaft Styles **C, J** Shaft Styles **B, R** Shaft Style **Y**

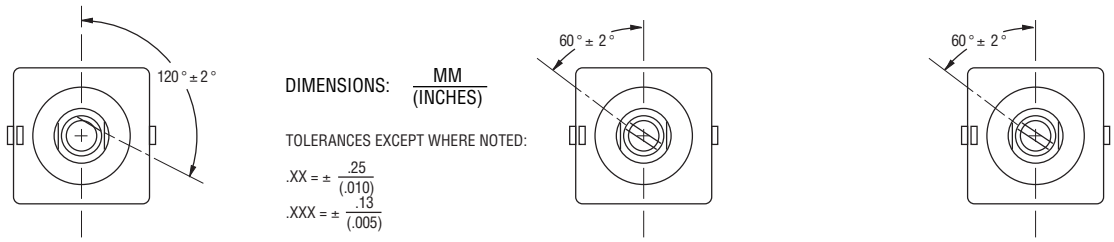

DIMENSIONS: MM (INCHES)

TOLERANCES EXCEPT WHERE NOTED:

.XX = ± .25 (.010)

.XXX = ± .13 (.005)

Specifications are subject to change without notice.
The device characteristics and parameters in this data sheet can and do vary in different applications and actual device performance may vary over time.
Users should verify actual device performance in their specific applications.

How to Order PC "Slimline" Panel Controls

BOURNS®

P	C	W	1	J	-	B	2	4	-	B	A	B	1	0	3	L

RoHS IDENTIFIER	
Code	**Description**
L	**Compliant**

SHAFT LENGTH (FMS)		
Code	**Description**	**Available Shaft Styles**
16	1/2 " (12.7 mm) Length	B
20	5/8 " (15.9 mm) Length	J
24	**3/4 " (19 mm) Length**	B, C, J, Y
28	**7/8 " (22.2 mm) Length**	B, C, J, Y
32	1 " (25.4 mm) Length	B, C, J, Y
36	1-1/8 " (28.6 mm) Length	B, C, J, Y
	Metric	
19	19 mm Length	R
22	22 mm Length	R
24	**24 mm Length**	R

RESISTANCE VALUES					
Code	**TR**	**Code**	**TR**	**Code**	**TR**
501	500 Ω	**103**	**10 KΩ**	**104**	**100 KΩ**
102	1 KΩ	203	20 KΩ	254	250 KΩ
252	2.5 KΩ	253	25 KΩ	504	500 KΩ
502	**5 KΩ**	**503**	**50 KΩ**	105	1 MΩ

ELEMENT TAPER VERSIONS	
Code	**Taper Description**
B	**Lin. CP ±20 %**
D	CW Audio CP ±20 %
G	CCW Audio CP ±20 %

SHAFT STYLES (See Outline Drawing)	
Code	**Description**
B	**1/4 " (6.35 mm) Dia. Slotted**
C	1/4 " (6.35 mm) Dia. Flatted
J	3/16 " (4.76 mm) Dia. Flatted
R	**6 mm Dia. Slotted (Use Metric Lengths Only)**
Y	3/16 " (4.76 mm) Dia. Split Shaft

DETENT CONFIGURATIONS	
Code	**Taper Description**
A	**No Detents**
B	10 Detents
C	Center Detent Only
D	20 Detents
E	30 Detents
F	CCW Detent Only

ANTI-ROTATION LUG	
Code	**Description**
J	**9:00 Position**
D	**None**

HOUSING TERMINAL CONFIGURATION												
	Code											
Features	**A**	**B**	**C**	**D**	**E**	**F**	**G**	**H**	**J**	**K**	**L**	**M**	**N**
Rear Mounting Bracket		X							X	X			X
Side Mounting Bracket					X		X				X	X	
Axial Terminals .100 " (2.54 mm) Centers	X	X								X			
Radial Terminals .100 " (2.54 mm) Centers				X	X						X		
Radial Terminals .200 " (5.08 mm) Centers						X	X					X	
Solder Lugs .200" (5.08 mm) Centers			X										
Axial Terminals .200 " (5.08 mm) Centers								X	X				X
Hardware Included	X		X	X		X		X		X	X	X	X

NO. SECTIONS	
1	**Single**

BUSHING CONFIGURATION		
Code	**Description**	**Available Shaft Styles**
W	**9 mm x .250 " (6.35 mm) Length Threaded M9 x 0.75 6g 5 Pl**	All
L	9 mm x .375 " (9.53 mm) Length Threaded M9 x 0.75 6g 5 Pl	B, C, R

Panel mount hardware not included as standard on bracketed versions. The sample part number demonstrates the identification code for Bourns Slimline Potentiometers. The part number shown is a commonly used model, typically available from stock.

Boldface features are Bourns standard options. All others are available with higher minimum order quantities.

Specifications are subject to change without notice.
The device characteristics and parameters in this data sheet can and do vary in different applications and actual device performance may vary over time.
Users should verify actual device performance in their specific applications.