THIS DRAWING IS UNPUBLISHED. RELEASED FOR PUBLICATION -,N/A .
© COPYRIGHT N/A BY TYCO ELECTRONICS CORPORATION. ALL RIGHTS RESERVED.

LOC	DIST
DF	SO

REVISIONS

P	LTR	DESCRIPTION	DATE	DWN	APVD
	N	REV PER ECO-05-003705	08-05	AA	DE

PART NO.	A (1)	B (1)	C	D	E	F	REMARKS	
848078-1	24.00 [609.6]	2.00 [50.8]	.38 [9.7]	6.00 [152.4]	4.00 [101.6]	–	(5)	OBSOLETE
848078-2	48.00 [1219.2]	2.00 [50.8]	.38 [9.7]	6.00 [152.4]	4.00 [101.6]	–	(5)	
848078-3	108.00 [2743.2]	2.00 [50.8]	.38 [9.7]	6.00 [152.4]	4.00 [101.6]	–	(5)	OBSOLETE
848078-4	72.00 [1828.8]	2.00 [50.8]	.38 [9.7]	6.00 [152.4]	4.00 [101.6]	–	(5)	
848078-5	10.00 [254.0]	2.00 [50.8]	.38 [9.7]	6.00 [152.4]	4.00 [101.6]	–	(5)	OBSOLETE
848078-6	120.00 [3048.0]	2.00 [50.8]	.38 [9.7]	6.00 [152.4]	4.00 [101.6]	–	(5)	
848078-7	84.00 [2133.6]	2.00 [50.8]	.38 [9.7]	18.00 [457.2]	4.00 [101.6]	–	(5)	OBSOLETE
848078-8	168.00 [4267.2]	2.00 [50.8]	.38 [9.7]	6.00 [152.4]	4.00 [101.6]	–	(5)	OBSOLETE
848078-9	192.00 [4876.8]	2.00 [50.8]	.38 [9.7]	6.00 [152.4]	4.00 [101.6]	–	(5)	OBSOLETE
1-848078-0	288.00 [7315.2]	2.00 [50.8]	.38 [9.7]	6.00 [152.4]	4.00 [101.6]	–	(5)	OBSOLETE
1-848078-1	144.00 [3657.6]	2.00 [50.8]	.38 [9.7]	6.00 [152.4]	4.00 [101.6]	–	(5)	OBSOLETE
1-848078-2	120.00 [3048.0]	14.50 [368.3]	.70 [17.8]	12.00 [304.8]	4.00 [101.6]	–	(5)	OBSOLETE
1-848078-3	114.00 [2895.6]	14.50 [368.3]	.70 [17.8]	12.00 [304.8]	4.00 [101.6]	–	(5)	OBSOLETE
1-848078-4	165.00 [4191.0]	18.00 [457.2]	.70 [17.8]	12.00 [304.8]	4.00 [101.6]	–	(5)	OBSOLETE
1-848078-5	165.00 [4191.0]	20.00 [508.0]	.70 [17.8]	12.00 [304.8]	4.00 [101.6]	–	(5)	OBSOLETE
1-848078-6	52.00 [1320.8]	12.00 [304.8]	.70 [17.8]	12.00 [304.8]	4.00 [101.6]	–	(5)	OBSOLETE
1-848078-7	64.00 [1625.6]	11.50 [292.1]	.70 [17.8]	12.00 [304.8]	4.00 [101.6]	–	(5)	OBSOLETE
1-848078-8	121.00 [3073.4]	37.00 [939.8]	.70 [17.8]	12.00 [304.8]	12.00 [304.8]	–	(5)	OBSOLETE
1-848078-9	53.00 [1346.2]	11.50 [292.1]	.70 [17.8]	12.00 [304.8]	4.00 [101.6]	–	(5)	OBSOLETE
2-848078-0	36.00 [914.4]	2.00 [50.8]	.38 [9.7]	6.00 [152.4]	4.00 [101.6]	–	(5)	OBSOLETE
2-848078-1	140.00 [3556.0]	2.00 [50.8]	.38 [9.7]	6.00 [152.4]	4.00 [101.6]	–	(5)	OBSOLETE
2-848078-2	28.00 [711.2]	2.00 [50.8]	.38 [9.7]	6.00 [152.4]	4.00 [101.6]	–	(5)	
2-848078-3	39.00 [990.6]	2.00 [50.8]	.38 [9.7]	6.00 [152.4]	4.00 [101.6]	–	(5)	
2-848078-4	60.00 [1524.0]	2.00 [50.8]	.38 [9.7]	6.00 [152.4]	4.00 [101.6]	–	(5)	OBSOLETE
2-848078-5	140.00 [3556.0]	11.00 [279.4]	.70 [17.8]	6.00 [152.4]	4.00 [101.6]	–	(5)	OBSOLETE
2-848078-6	93.00 [2362.2]	17.00 [431.8]	.70 [17.8]	6.00 [152.4]	4.00 [101.6]	–	(5)	OBSOLETE
2-848078-7	180.00 [4572.0]	2.00 [50.8]	.38 [9.7]	12.00 [304.8]	4.00 [101.6]	–	(5)	OBSOLETE
2-848078-8	20.00 [508.0]	6.00 [152.4]	.38 [9.7]	4.00 [101.6]	6.00 [152.4]	–	(5)	OBSOLETE
2-848078-9	48.00 [1219.2]	2.00 [50.8]	.38 [9.7]	6.00 [152.4]	4.00 [101.6]	6.00 [152.4]	(5)	OBSOLETE
3-848078-0	30.00 [762.0]	2.00 [50.8]	.38 [9.7]	6.00 [152.4]	4.00 [101.6]	6.00 [152.4]	(5)	OBSOLETE
3-848078-1	96.00 [2438.4]	2.00 [50.8]	.38 [9.7]	12.00 [304.8]	4.00 [101.6]	12.00 [304.8]	(5)	
3-848078-2	28.50 [723.9]	2.00 [50.8]	.38 [9.7]	6.00 [152.4]	4.00 [101.6]	–	(5)	
3-848078-3	240.00 [6096.0]	2.00 [50.8]	.38 [9.7]	–	4.00 [101.6]	12.00 [304.8]	(5)	
5-848078-6	120.00 [3048.0]	2.00 [50.8]	.38 [9.7]	6.00 [152.4]	4.00 [101.6]	–	(6)	
7-848078-2	28.00 [711.2]	2.00 [50.8]	.38 [9.7]	6.00 [152.4]	4.00 [101.6]	–	(6)	
7-848078-3	39.00 [990.6]	2.00 [50.8]	.38 [9.7]	6.00 [152.4]	4.00 [101.6]	–	(6)	
8-848078-1	96.00 [2438.4]	2.00 [50.8]	.38 [9.7]	12.00 [304.8]	4.00 [101.6]	12.00 [304.8]	(6)	

(1) TOLERANCE OF TABULATED DIMENSIONS:
UP TO 24 INCHES [609.6] = ±.12 [±3.0]
24 INCHES [609.6] & UP = ±1%

(2) MARKED PER MIL-STD-130.
LOCATED IN APPROX. CENTER OF LEAD.

3. TO MATE WITH AMP LGH-4
RECEPTACLE WITH 2.00 [50.8] BARREL DEPTH.

4. OPERATING VOLTAGE: 50 KVDC AT 0 TO 70,000 FEET,
-55°C TO 125°C.

(5) PIGTAILS SOLDER DIPPED.

(6) INSULATION CUT, BUT NOT REMOVED.

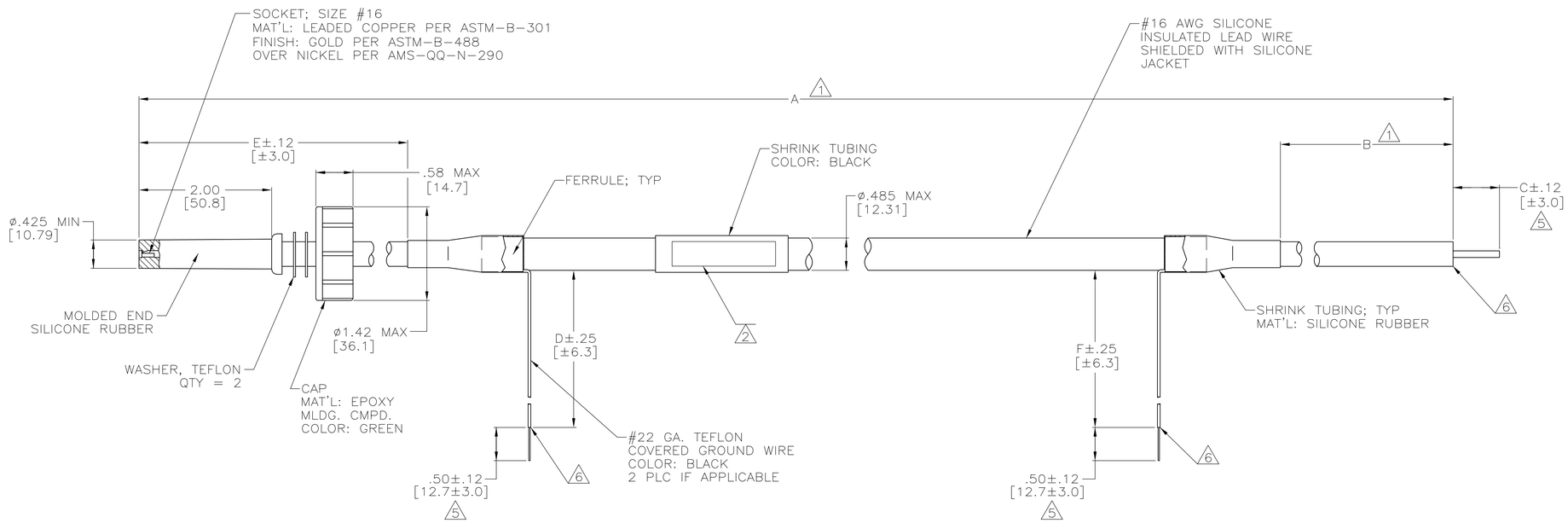

THIS DRAWING IS A CONTROLLED DOCUMENT.

DIMENSIONS: INCHES

TOLERANCES UNLESS OTHERWISE SPECIFIED:

0 PLC	± –
1 PLC	± –
2 PLC	± .02 [0.5]
3 PLC	± –
4 PLC	± –
ANGLES	± –

MATERIAL: SEE CALLOUTS

FINISH: SEE CALLOUTS

DWN C.C.THOMAS 29-MAR-90
CHK D.EABY 29-MAR-90
APVD D.EABY 29-MAR-90

PRODUCT SPEC —

APPLICATION SPEC —

WEIGHT —

CUSTOMER DRAWING

Tyco Electronics Corporation
Harrisburg, Pa 17105-3608

NAME: LEAD ASSY, SINGLE MOLDED END SHIELDED AND SILICONE COVERED LGH-4

SIZE	CAGE CODE	DRAWING NO	RESTRICTED TO
A1	00779	C-848078	—

SCALE 1:1 SHEET 1 OF 1 REV N